# IRICEN Journal of Civil Engineering

ज्ञान ज्योति से मार्गदर्शन

Volume 9, No. 2 www.iricen.indianrailways.gov.in April - June 2016

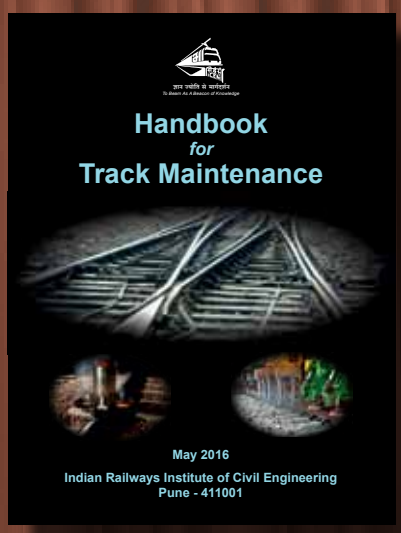

Indian Railways Institute of Civil Engineering, Pune

ज्ञान ज्योति से मार्गदर्शन

To impart world class training in Rail technology and Railway specific civil engineering through competent faculty & personnel and state-of-art training infrastructure.

We shall ensure continuous improvement in both technical and managerial areas to play a significient role in finalization of prevailing practices and help in achieving overall vision of the Indian Railways.

# OUR QUALITY POLICY

1. We will impart quality training in the fields of rail technology and railway specific civil engineering to develop competence amongst engineering fraternity of railways.
2. We will focus on customer satisfaction through identification, control and improvement of all key processes. For this, we will continuously endeavour to deliver quality services through constant interaction with RDSO, Railway Board and Zonal Railways.
3. For ensuring overall development of trainees, we will also emphasise on Improvement of their managerial skills.
4. For achieving above, we will deploy competent faculty & personnel and state-of- art infrastructure.
5. We will create conducive working environment where every employee is motivated to contribute his best.
6. Our motto is to “Beam as a beacon of knowledge”.
7. This Quality Policy shall be reviewed periodically for its continuing suitability and communicated to all employees.

# *From director's desk*

***Dear Readers,***

The first of its kind "Handbook for Track Maintenance", a testimony of Indian Railway's capability in healthy and robust collaborative efforts, was released by Member Engineering along with "Monograph on ICF All-coil Coaches". There are few more monographs in pipeline to cover detailed aspects on specific topics especially oft-disregarded topics on rolling stock. The "Handbook for Track Maintenance" contains, all at one place, comprehensive instructions for laying and maintenance of track presented in lucid manner, supported by illustrations & examples for ease in understanding by field engineers. I am sure that it would bridge the gap that might have existed due to scattered instructions lacking comprehensiveness.

This edition of journal includes papers on diverse topics. While the paper on Concrete sleeper track Management of change tend to familiarize us with the basic concepts of track behaviour and few thoughts and suggestions about handling few possibilities, another paper deals with impact of change in geography due to urbanization/development in catchment area of bridges.

The papers on formation treatment by blanketing and use of geotextiles to reduce the thickness of blanket layer are relevant in context of increasing of speed and axle loads on existing lines. The other papers include, environmental aspects in Railway construction projects, innovations and economy measures and improvements made at CPOH Allahabad etc.

I sincerely hope that the readers would find the papers and other articles contained in this edition timely and useful. The suggestions and contributions of technical papers, news items, articles etc. must be sent by field engineers, for inclusion in the forthcoming issues of this journal, and sharing of knowledge and experience with engineering fraternity.

Pune

July - 2016.

(Vishwesh Chaubey)
Director

## EDITORIAL BOARD

**Shri Vishwesh Chaubey**
Director
Chairman

**Shri N. C. Sharda**
Dean

## EDITING TEAM

**Shri C. S. Sharma**
Sr. Professor (Track)
Executive Editor

### TRACK

**Shri A. K. Patel**
Professor (Track I)
**Shri M. B. Dekate**
Professor (Track Machine)
**Shri Suresh Pakhare**
Professor (Track II)
**Shri N. K. Mishra**
Associate Professor (Track I)
**Shri J. M. Patekari**
Asst. Professor (Track I)
**Shri R. K. Kathal**
Asst. Professor (Track II)
**Shri R. P. Singh**
Asst. Professor (Track III)

### WORKS

**Shri R. P. Saxena**
Sr. Professor (Engineering)
**Shri S. K. Bansal**
Sr. Professor (Projects)
**Shri S. K. Garg**
Sr. Professor (Works)
**Shri Gautam Birhade**
Professor (Works)
**Shri Neeraj Khare**
Professor (Est.)
**Shri N. R. Kale**
Asst. Professor (Works)

### BRIDGES

**Shri Ramesh Pinjani**
Sr. Professor (Bridge - II)
**Shri Vineet Gupta**
Sr. Professor (Bridge - I)
**Shri. Sharad Kumar Agarwal**
Professor (Bridge)

### EDITORIAL ASSISTANCE

**Shri Pravin Kotkar**
Sr. Instructor (Track I)

The papers & articles express the opinions of the authors, and do not necessarily reflect the views of IRICEN editorial panel. The institute is not responsible for the statements or opinions expressed in its publication.


# Index


**I) Railway & Other News** 3

**II) Events** 11

**III) Technical Papers**

1. Concrete Sleeper Track - Management of Change 13
   Shri Rajeev Bhargava, Retd. GM/RWP/SBC

2. Impact of Change in Geography Due to Urbanisation/Development in Catchment Area and Consequent Effect on Waterway Requirement of Bridges 19
   Shri R.N.Sunkar, CBE/WCR

3. LHB(Linke Hoffman Bush)Coaches 26
   Shri Surendra Kr. Bansal, SPP/IRICEN, Shri. Mathew Varughese, SI/M-1/IRICEN

4. Formation Treatment by Blanketting (Track Dismantling Method) 30
   Shri R.Nandagopal, DEN/West/Salem

5. Environmental Aspects in Railway Construction Projects 36
   Shri Sunil Kumar Yadav, Dy Chief Engineer (Con)-VI, HWH, Eastern Rly

6. Innovations, Economy Measures and other Improvements at CPOH/ALD 46
   Shri S.K.Srivastava, Dy.CE/CPOH/ALD

7. Reducing Blanket Layer Thickness by Using Geotextiles: A Review 51
   Shri Saurabh Singh, IRSE Probationer (2013),
   Shri R. P. Singh, Asst. Professor/ Track/ IRICEN

**IV) Literature Digest** 61

**VI) Calendar of Courses** 70


Suggestion for improvement of **Iricen Journal of Civil Engineering** are welcome from the readers. Suggestions may be sent to mail@iricen.gov.in

**Guidelines to contributors**

Articles on the Railway Civil Engineering are welcome from the authors. The authors who are willing to contribute articles in the IRICEN Journal of Civil Engineering are requested to please go through the following guidelines :

1. The paper may be a review of conventional technology, possibilities of improvement in the technology or any other item which may be of interest to the readers. The paper should be reasonably detailed so that it could help the reader to understand the topic. The paper may contain analysis, design, construction, maintenance of railway civil engineering assets. The paper should be concise.
2. The journal is likely to be printed in a paper of size 215 mm X 280 mm. While sending the articles the author should write in 2 columns. Sketches, tables and figures should be accommodated in a 2 column set up only.
3. Author should send the original printout of photograph along with the digital copy of the photograph.
4. Soft copy as well as hard copy of article must be invariably sent to the editors of concerned subject.
5. Only selected articles will be included in the IRICEN Journal of Civil Engineering.

## Indian Railways Invites Proposals for Modernization of Stations

The railway ministry has advertised its plan to redevelop 'A-1' and 'A' category stations (about 400 in number) on 'as is where is' basis, by inviting proposals from developers with their designs and business ideas, Minister of State for Railways, Manoj Sinha said in Lok Sabha. Public Sector Undertakings can also participate under this scheme. Category of stations is decided on the basis of annual earnings from passenger traffic.'A-1' category stations have annual passengers earnings of more than ₹60 crores and 'A' category stations have annual passenger earnings of ₹8 – 60 crores. The entire cost of station redevelopment is to be met by leveraging commercial development of land and air space in and around the stations. The land is only to be leased to the developers and its ownership shall remain with Railways. The developer shall be responsible for station redevelopment, associated real estate development and operation & maintenance (O&M) of the same. State Governments/local bodies can also be made partner in the scheme, if necessary, in case higher FAR (Floor Area Ratio) is granted by them. Provision/augmentation/ improvement of identified passenger amenities at railway stations is taken up as a continuous process depending upon requirement and inter-se priority of works, subject to availability of funds, the Minister said.

**Ref: The Master Builder, March 2016**

## PETS Completed for the New Dedicated Rail Corridors

The preliminary engineering cum traffic survey (PETS) reports for the newly proposed corridors – East-West Corridor (2328 kms) (Kolkata-Mumbai); North-South Corridor (2343 km) (Delhi-Chennai); and East Coast Corridor (1114 km) ( Kharagpur-Vijaywada) have been completed. The freight traffic projections in the three new corridors as per PETS reports indicate a level of approximately 1300 million tonnes by 2026-27. The newly proposed corridors are designed for 25 tonne axle load standards (upgradable to 32.5 tonne axle load) with maximum speed of 100 km/h, and are parallel to the existing alignment.

The estimated completion cost combined is ₹ 2,71,949 crore – (East-West Corridor – ₹ 1,10,529 crore; North-South Corridor – ₹ 1,04,471 crore; and East Coast Corridor – ₹ 56,749 crore.)

**Ref: The Master Builder, March 2016**

## RVNL Undertakes Track Doubling of Madurai-Maniyachi-Thoothukudi Section

The doubling of railway track between Madurai-Maniyachi-Thoothukudi and Maniyachi-Tirunelveli-Nagercoil to be undertaken by the Rail Vikas Nigam Limited (RVNL) will be completed in the next three years. The RVNL will contribute the major share of ₹ 70 crore for the doubling project in the Madurai-Maniyachi-Thoothukudi section against the total yearly allocation of ₹ 100 crore for the year 2016-2017 and

₹ 110 crore for the Maniyachi-Tirunelveli-Nagercoil against the total yearly allocation of ₹ 120 crore for the current fiscal. Initial works of preparing the engineering scale plan (ESP) for the doubling projects have been already started. The ESP is expected to be submitted in a couple of months. It would be then approved by the various departments of signaling, engineering, electrical and operation, following which the actual work would commence. Moreover, the much delayed Shengottai-Punallur gauge conversion works started six years ago in 2010 too is expected to be commissioned by December this year. The tunnel work at Ariyankavu in Kerala in the Shengottai-Punalur section alone remains to be completed.

**Ref: The Master Builder, April 2016**

## CCEA Approves Doubling of Hatia-Bomdamunda and Kiul-Gaya Rail Sections

To increase the rail line capacity for freight traffic, Cabinet Committee on Economic Affairs (CCEA) approved the doubling of the 158.5 km Ranchi (Hatia) – Bondamuda railway line to cater the needs of thermal power plants in the region. Estimated to cost ₹ 1921.94 crore, the doubling project will ease traffic bottlenecks in the region and will benefit Ranchi, Gumla and Simdega districts of Jharkhand and Sundargarh district of Odisha. Hatia-Bondamunda Rail line project is likely to be completed in the next six years. With the expansion of the Bokaro Steel Plant and Rourkela Steel Plant, the utilization of the existing line capacity will be to the tune of 226 per cent and 171 per cent respectively. Hence, to cope up with the existing as well as additional traffic, doubling of the whole section is required. The capacity augmentation is also expected to serve freight traffic needs of the upcoming Super Thermal Power Plant at Barch and other thermal power plants like Katni and Baruni. Kiul-Gaya rail line project got approval for doubling the line of 124 km with a completion cost of ₹ 1354.22 crore. Doubling of this line will greatly ease the ever increasing freight traffic between these sections. The project is likely to be completed by 2019-20. Some districts of Bihar also will be benefited from the project.

**Ref: The Master Builder, April 2016**

## Railways to Lay Test Track for High-Speed Trains

In a first for Indian Railway, the public sector transporter is laying a 20 km-long test track, equipped with a modern laboratory, near Raipur for trial of high-speed and regular trains it plans to introduce. Besides, new locomotives and coaches, the test track will also be used for trial of high axle load wagons. Currently, the trial of new trains are conducted on the existing rail network causing traffic diversion and delay in operations. Also, the rail tracks are not equipped to help simulation of all test conditions. Test tracks are used for trial run of new trains in countries, including the US, Japan and South Korea. The 20 km test track, including a 5 km loop line, will be developed at an estimated cost of about ₹ 100 crore. The facility will be used for technical acceptance tests and approvals of locomotives, rolling stock under operating condition and personnel training. It will also be equipped for prototype testing of all new innovations and development of railway technology, which require a number of safety permissions and protocols to be followed rigorously. The test track will also enable railways to undertake railway related research projects, and devise better and innovative solutions for infrastructural bottlenecks on the railway network.

**Ref: The Master Builder, May 2016**

## Tripura Rail Link with Metros Soon: Suresh Prabhu

Tripura is all set to have full-fledged broad-gauge regular train service with other states, including Bengal and Delhi, after May 20. At present, trial run of passenger trains on the newly laid broad-gauge track between Silchar and Agartala is on and will continue till the launching of the service. Railway minister, Suresh Prabhu said that repair on the tracks between Badarpur and Lumding was on in full swing. He added that after launching of regular passenger train services on broad gauge between Agartala and other state capitals and major towns, the linking of Udaipur in Tripura's Gomati district and Sabroom in South Tripura district by broad-gauge railway would be taken up. Tripura Government has also urged the Centre to link the State's rail network with Myanmar to access the opportunity of Trans-Asian Network. Also, the Centre has already sanctioned Rs 98 crore for taking up land acquisition process for the Akhaura-Agartala railway extension project.

**Ref: The Master Builder, May 2016**

## Railways to spend ₹ 5000 Crore on North-East: Prime Minister

While inaugurating the new passenger trains for North Eastern region Prime Minister, Narendra Modi said that better railway connectivity and massive infrastructure plans were on cards for the North eastern region and mentioned that New Delhi is highly focused towards achieving this objective. He said that new railway routes will boost economy in North-East and the railway ministry will spend ₹ 5,000 crore on North-East. He added that the Central Government has sanctioned ₹ 10,000 crore for the development of railway network in the North East region. The Prime Minister said the centre has come up with a mission policy to upgrade roads, telecommunication, power and waterways in the region apart from railways. This will give a boost to the economic development of the region, he said. The targeted commissioning of some of the project include the Bhairabi-Sairang (Mizoram) route, which is to be commissioned by 2018-19, and the Dimapur-Zubza (Nagaland), Sevok-Rangpo (Sikkim) and the Byrnihat-Shillong (Meghalaya) routes, which are set to be commissioned by 2019-20. The deadline set for Tetelia-Byrhinat route in Meghalaya is by early next year, as per the 2020 vision document of the Indian Railways.

**Ref: The Master Builder, May 2016**

## IR Commences Usage of Drones to Monitor Progress of Projects

Indian Railways has used drones for the first time for inspecting a mega rail project to assess the progress on the ground. It would now be used to monitor other under-construction schemes.

The unmanned aerial vehicle (UAV) was used to inspect the ongoing work on the Dedicated Freight Corridor (DFC) project and, as per the plan, all ongoing projects will be monitored through aerial survey.

Besides, the public sector behemoth has also decided to use drones to assess the ground situation in the aftermath of train accidents.

"We used a drone to ascertain the progress on the 42 km long track between Baghega to Srimadhopur in Rajasthan in the Western DFC and also the 56 km long line between Durgawati and Sasaram in Bihar," DFC Managing Director Adesh Sharma said.

As far as DFC is concerned, the Durgawati-Sasaram section is complete now and awaiting safety clearance before being commissioned.

The drone was used for three days on a trial basis to cover the total 98 km on the DFC. The status report was prepared after the analysis of video recordings.

"It becomes easier and faster to prepare the status report of an ongoing project through drone. Field work can be monitored from the office using the drone footage," said Mr Sharma.

The drone was hired from a private operator and it cost ₹ 3,000 per km for undertaking the aerial survey. Currently about 170 projects, including doubling and laying of new lines, are being executed by railways.

Drones will now be used to assess actual physical progress of these projects, sources said.

Introduction of Drones in Railway operations is part of Railway Minister Suresh Prabhu's Rail Budget speech in Parliament this Feb for achieving excellency in the safety, security and quality in the operations of Indian Railways.

**Source: http://www.railnews.co.in**

## Railways forms SPV to Execute Mumbai-Ahmedabad Bullet Train Project

Gearing up to introduce trains that run at speeds of more than 300kmph, the railways have formed a new Special Purpose Vehicle (SPV) to implement the Mumbai-Ahmedabad High Speed Bullet Train project.

The entity has been named the National High Speed Rail Corporation Limited. The bullet train is expected to cover the 508km between Mumbai and Ahmedabad in about two hours, running at a maximum speed of 350kmph and operating speed of 320kmph.

Currently, Duronto takes about seven hours to cover the distance between the two financial centres of the country. Estimated to cost about Rs 97,636 crore, 81% of the funding for the project would come by way of a loan from Japan. The project cost includes possible cost escalation, interest during construction and import duties.

It is a soft loan for 50 years at 0.1% annual interest with 15 years' moratorium period, said a senior Railway Ministry official. Maharashtra and Gujarat are expected to participate in the equity for the SPV, while the Railways will have 50%. The balance would be contributed by the state governments of Maharashtra and Gujarat.

For timely completion of the project, a Joint Committee has been formed under the Vice-Chairman of NITI Aayog with the secretaries of the Department of Industrial Policy and Promotion (DIPP), Departments of Economic Affairs and Foreign Ministry as its members along with the Railway Board Chairman.

He said it will take about seven years after the awarding of the contract for the project to be completed as a lot of new technologies would be used to construct the high-speed corridor. According to a survey, approximately 13 million passengers per annum will be availing the service once it is launched.

**Source: http://www.railnews.co.in**

## Weighty Challenge: Solar Powered Coaches will have to Rework Coach Weight

The Integral Coach Factory's (ICF) trials, in collaboration

with the Indian Institute of Science (IISc), Bangalore, with solar powered coaches have been successful, but has now thrown open another weighty challenge.

The solar panels, while generating enough electricity to power a non-air-conditioned coach, are also creating a problem of adding to the deadweight of the coach. This means that coaches with the panels will have to be redesigned and engineered to ensure that the weight of the coach does not go up.

"We have received the report from IISc. We are taking a further call on it. The solar panels, however, add to the weight of the coach. Some framework is required to mount the panel on the roof. Without adding extra weight, we have to see how to bring power to the coach," an ICF official told.

In June, the Railways rolled out its first solar panel-enabled coach that generated about 17 units of power in a day to enable the lighting system in the coach on the Rewari-Sitapur passenger train. The department has plans to generate about 1,000 MW in the next five years. Through this plan, the Railways hopes to reduce the amount of electricity it draws from the grid.

However, mass production of solar powered coaches will be viable when the issue of the deadweight is solved. "We can have batteries to store the solar power generated during the day, but that will require a large number of batteries which will once again add to the deadweight," the official pointed out. "The panels can be embedded on the roof itself. But, it will require extensive design change in the roof. A commercially viable solution is required," the official added.

**Source : http://www.railnews.co.in**

## World's Deepest and Longest Train Tunnel Just Opened – Claustrophobes Beware!

The world's longest train tunnel opens under swiss alps. Opening of longest railway tunnel was bizarre but the pics are incredible. Gotthard base tunnel in switzerland opens with bizarre satanic ritual ceremony. Commissioning of the gotthard base tunnel brings exclusive train journey experience of discovery into the longest train tunnel in the world. From the end of 2016, passengers will cross the alps in the new tunnel in only 20 minutes and reach their destination faster than ever!

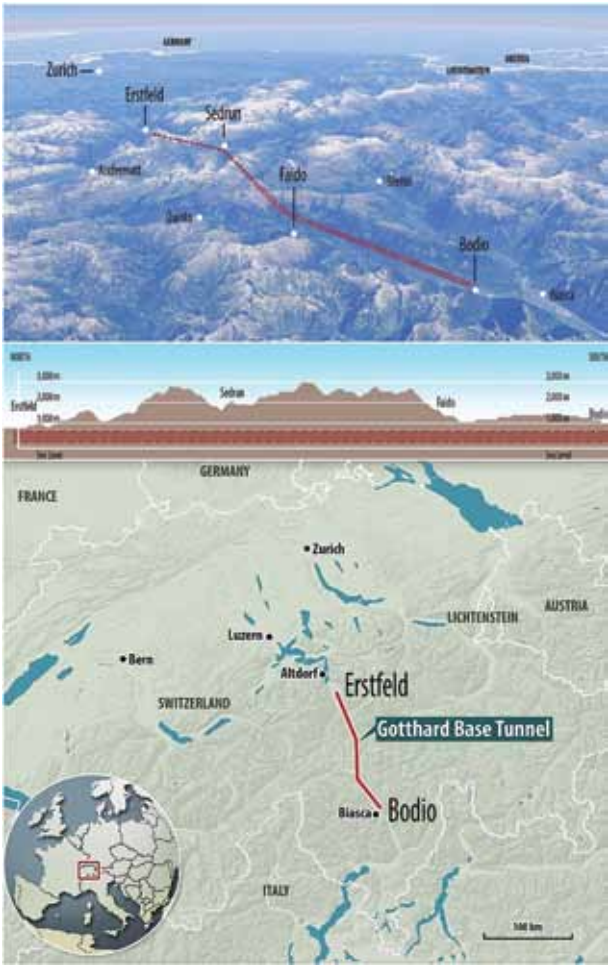


On June 1, 2016, 17 years after the first blast in the main shaft, the world's longest railway tunnel officially opened.

And he opened the bottomless pit; and there arose a smoke out of the pit, as the smoke of a great furnace; and the sun and the air were darkened by reason of the smoke of the pit. **Revelation 9:2 (KJV)**

*A spectacular opening ceremony took place at the northern portal in Erstfeld where guests watched trapeze artists and dancers*

The Gotthard Base Tunnel, the longest train tunnel in the world, enters into service on 11 December 2016. Prior to this, the record-breaking construction will be more accessible than ever, but only for a limited period: from 2 August 2016, passengers may descend into the once-in-a-century construction on exclusive tunnel rides – disembarkation in the depths of the mountain included.The special "Gottardino" train only runs until 27 November 2016 and the number of tickets is limited.

Switzerland is now home to the world's longest railway tunnel, named the Gotthard Base Tunnel. Built over nearly 17 years, the tunnel was officially opened on June 1 in Erstfeld, with a grand ceremony to mark the moment. The guest list was impressive – Swiss President Johann Schneider-Ammann, German Chancellor Angela Merkel, French President Francois Hollande and Italian Prime Minister Matteo Renzi were among the dignitaries present. They were treated a show both weird and wonderful.

Hundreds of artistes participated in the extravagant gala, some dressed in orange worker uniforms, others semi-clad, still others carrying what we hope were replicas of animal carcasses. An angel with giant wings was suspended from the ceiling, aerial artists performed hanging off chains.

It's hard to understand what was really going on in the performance and what it represented. However, the pictures are truly spectacular.

*Artists perform during a show on the opening day of the Gotthard rail tunnel, the longest rail tunnel in the world, at the fairground Rynaecht at the northern portal in Erstfeld, Switzerland*

**The Gotthard Base Tunnel** is a railway base tunnel through the Alps in Switzerland. It opened on 1 June 2016 with full service to begin in December 2016. With a route length of 57.09 km (35.5 mi) and a total of 151.84 km (94.3 mi) of tunnels, shafts and passages, it is the world's longest and deepest traffic tunnel and the first flat, low-level route through the Alps. The Gotthard Base Tunnel is, with a length of 57.09 kilometres (35.47 mi), the longest railway tunnel in the world, with a geodetic distance of 55.782 kilometres (34.661 mi) between the two portals.

*Explosive entrance: A fireworks display lit up the grey skies as the first train to travel through the tunnel emerged this afternoon*

It is also the first flat route through the Alps or any other major mountain range, with a maximum height of 549 metres (1,801 ft) above sea level. It is, therefore, the deepest railway tunnel in the world, with a maximum depth of approximately 2,300 metres (7,500 ft), comparable to that of the deepest mines on Earth. Without ventilation, the temperature inside the mountain reaches 46 °C (115 °F).

The test operation of the Gotthard Base Tunnel is in full swing. The handover of the longest train tunnel in the world by constructor Alp Transit Gotthard AG to its future operators, Swiss Federal Railways SBB, will take place in two months' time, on 1 June 2016, after 17 years of construction.

Catching a train deeper into the mountain than ever before Before regular operations of the Gotthard Base Tunnel commence on 11 December 2016, SBB is giving customers the opportunity to admire the interior of the once-in-a-century construction. From 2 August to 27 November 2016, the special "Gottardino" train

will carry visitors to a record depth in the rock of the Swiss Alps.

**Spectacular:** The world's longest tunnel officially opened on Wednesday, with the trailblazing rail passage under the Swiss Alps aiming to ease transit through the heart of Europe

A special stop will be made at the multi-function station in Sedrun.. Here, 800 metres below the surface, a tour will vividly demonstrate the dimensions of the gigantic tunnel system. Once trains are travelling through the Gotthard Base Tunnel at high speed, a stop in the middle of the tunnel will no longer be possible. Thanks to the new north-south connection, regions and neighbouring countries on both sides of the Gotthard Tunnel will move closer together.

From the end of 2016, passengers will cross the Alps in the new tunnel in only 20 minutes and reach their destination faster than ever.

| | |
|---|---|
| **Length:** 571m (the longest rail tunnel in the in the world)<br>**Duration of tunnel journey:** a little under 20 minutes<br>**Total length of all the tunnels:** 152km (94 miles)<br>**Highest point of the tunnel:** 550m (1.800 feet) above sea level<br>**Maximum rock cover:** 2,300m (7.545 metres)<br>**Construction time (excluding exploratory work):** 17 years<br>**Excavated material:** 26 2 million tonnes<br>**Total cost:** 12.2billion swiss francs (£8.4 billion) | **Tunnel:** 260 freight trains and 65 passenger trains per day<br>**Time table speed :** freight trains 100km/h (62 mph) : passenger trains up to 200 km/h (125 mph)<br>**Maximum speed:** freight trains 160 km/h (100 mph) : passenger trains 250 km/h (155 mph)<br>**Reduction in journey time from Zurich to Lugano after completion of the axis (from 2020):** around 45 minutes<br>**Official opening of the Gotthard Base Tunnel:** 11 December 2016 |

Fittingly, the first ones to travel the tunnel at the official opening will be 500 lucky winners plus guests from the 130,000 who entered a ticket lottery for the inaugural trip.

*International draw: Swiss Federal President Johann Schneider-Ammann, right, speaks with German Chancellor Angela Merkel, left, on the opening day of the Gotthard rail tunnel*

The overall project includes the Loetschberg rail tunnel that has already opened, the Cereti tunnel still being built and renovations to make rail tunnels at least 4 metres high at the corners to be able to handle big freight containers. Work is due to finish in 2020.

The mammoth rail venture is being financed by value-added and fuel taxes, road charges on heavy vehicles and state loans that are due to be repaid within a decade.

*The happy winners of tickets for the first train prepare to step on board. The construction of the 57km long tunnel began in 1999*

The rough design for a rail tunnel under the Gotthard Pass was first sketched by Swiss engineer Carl Eduard Gruner in 1947. But bureaucratic delays, concerns over the cost and other hurdles pushed back the start of construction until 1999.

German Chancellor Angela Merkel, French President Francois Hollande and Italian Prime Minister Matteo Renzi, along with Swiss officials, are due to be on board for the ceremonial first run.

When the full service opens in December, the tunnel will shave the train journey from Zurich to Milan in northern Italy down to two hours and 40 minutes, roughly an hour less than it currently takes.

**Source: http://www.railnews.co.in**

## Railways opens up Parcel Services to Private Sector – Container Train Operators to run Parcel Special Trains

*Railways has introduced the facility of Train Service Parcel Van in the Country!*

New Delhi: The Railways today opened its parcel business segment to container train operators to run "parcel special trains" in a bid to shore up its earnings.

"Parcel business is increasing as it is a fast moving sector. We want to increase our parcel share which is currently not much," Railway Minister Suresh Prabhu said after announcing the liberalised parcel policy here.

The Railways earn about Rs 2,000 crore a year in parcel business. It has set a target of Rs 3,000 crore for the current fiscal.

**The commercial wing formulate strategies so as to encourage the agriculture / poultry trade to utilize railways for transport of perishable commodities including poultry products such as eggs, apart from Electronic Goods and Pharmaceuticals will be beneficial from the facility.**

As per the new policy, container train operators (CTO) will be allowed to operate parcel special trains consisting of parcel vans. A parcel special train will have 20 parcel vans.

Prabhu said the initiative was mentioned in the rail budget. The facility is sure to give a big fillip to the transport of perishable commodities including Eggs from the region towards consumer destinations. The VPU service will hold a capacity for transport of 23 Tonnes of commodity, he said.

CTOs will aggregate the parcel cargo from customers and offer the same in full rake load. At the respective destinations, parcel cargo will be delivered to CTOs for further segregation and handing over to customers.

Prabhu said the Post and Telegraph department also has ambitious plans to increase their parcel business and the Railways can tie up with them.

Railway Board Member (Traffic) Mohd Jamshed said parcel operation was being currently carried in a very limited way and efforts are on to increase it in a significant way.

Parcel policy has been liberalised now and all zones have been asked to run parcel vans on lease, Jamshed said.

Asked what kind of goods will be targeted for parcel services, the official said "basically, white goods can be transported in parcel. Pharmaceuticals, electronics and other similar items can also be transported in a big way in parcel." The perishable commodities loaded from these destinations shall include agriculture produce, fish and eggs etc., Therefore, the VPU service will immensely serve the business interest of the poultry / farming community in the region in particular.

CTOs will be permitted to avail the facility at container rail terminals, domestic container terminals, inland container depot, multi-modal logistic park and all railway terminals.

**Source: http://www.railnews.co.in**

Hon'ble President of India addressing to IRSE(P) 2013 batch at Rastrapatibhavan

Group photo of IRSE(P) 2013 batch with Hon'ble President of India.

International Yoga Day celebrated in IRICEN

## Release of IRICEN Publications by Member Engineering at New Delhi

Member Engineering Shri. V. K. Gupta addressing to the Gathering

Director IRICEN Shri. Vishwesh Chaubey Addressing to Gathering

Diginities present during release of IRICEN Publications

# Concrete Sleeper Track - Management of Change

By
Rajeev Bhargava*

1.0 **Basic Concepts to Familiarize with the Behaviour of Track.**

1.1 **Some basic formulas:**

1.1.1. **What is track stiffness? (K)**

Track stiffness is the load required to cause unit deflection and is given by $K = (64EI\,U^3)^{1/4}$--------( 1 )

1.1.2 **What is track modulus? (U)**

Track modulus is the load per unit length to cause unit deflection.

Track modulus (U) is a property of track bed and depends largely on type of sleeper and its fastenings, while it **depends** to certain extent on sleeper spacing, depth of construction, it hardly **depends** on Track gauge and rail section do not effect much.

**Range of track modulus = 90 kg/cm/cm (poor track) to 900 kg/cm/cm (good track).**

1.1.3 **For track design and understanding the behaviour of track under various situations, we require,**

| | |
|---|---|
| (i) | If Q = wheel load, rail seat load for design of sleeper ($Q_s$) is given by<br>$Q_s = U \times S \times Z$ where<br>S = Sleeper spacing<br>Z = local subsidence = $Q/(64\,EI\,U^3)^{1/4}$-- (2)<br>$Q_s = QS/2L = QS/2\sqrt[4]{U/4EI}$ ----------(3) |
| (ii) | For design of rail, rail stress = Bending moment (M) / section modulus, while, Bending moment is given by<br>$M = QL/4 = (Q/4)\,(\sqrt[4]{4EI/UI})$ ----------*(4)* |

1.2 Behaviour of track in terms of above formulas (2, 3 & 4)

1.2.1 If Track modulus increases (**U**↑)then bending moment decreases **(M$\sqrt[4]{\ }$)**

local subsidence decreases (**Z**↓ ); and

Rail Seat Load increases (**Qs**↑)

Accordingly, in situations,where Track modulus increases (**U**↑ )because of either using concrete sleeper or poor condition of ballast, Rail seat load is more hence both ballast pressure and formation pressure is more.

**(A negative point for concrete sleeper track required to be taken care of during maintenance)**

1.2.2 However, if Sleeper spacing decreases (**S**↓),then again Track modulus increases (**U**↑).Hence, bending moment decreases (**M**↓)and Rail Seat Load alsodecreases ($\mathbf{Q_s}$↓), because, Rail seat load = $QS/2L = QS/2\sqrt[4]{U/4EI} \propto S^{3/4}$ i.e.With decrease in sleeper spacing, **both bending moment in rail and rail seat load tend to reduce.**This is quite natural also, because number of sleepers now available to share the load by reducing sleeper density is more and hence, load on individual sleeper has to be less.

1.2.3 If, during monsoon, track condition results into decrease in Track modulus (**U**↓ )

then, M↑ hence, rail stress↑ i.e. more load shared by rail, further

Q↓ (This, however, is likely to be accompanied by much more reduction in bearing capacity of sub-grade)

* Retd. GM / RWP / Banglore

1.2.4 If Elthen

Z ↓

Qs↓

M↑, It does not imply that rail stresses will be more. In fact railstresses will be less because proportional increase in section modulus of rail is much more than the increase in EI of rail

1.2.5 L = characteristic length ; $1/L = \sqrt[4]{U/4EI}$

- **Value of L varies from 1.2. m (poor track) to 0.7 m (good track)**
- Influence line diagram of deflection under a concentrated load indicates that, sleepers have a tendency to lift between $3\pi L/4$ and $7\pi$ L/4.
- Since ballast track can't absorb tensile force hence compension is provided by dead weight.The tendency to lift gets compensated if,

Unit weight of track $>0.022$ Q/L

- Modern track laid with concrete sleeper satisfies the above condition of unit weight of track and accordingly the tendency for lifting of track between 3rd to 9th sleepers gets compensated.

1.2.6 **If U↓** then **L↑** , accordingly lesser number of sleepers share the load,hence, load on individual sleeper (Qs) will be more (↑) as is evident from (3).

1.2.7 For a single wheel load, larger part of track getting affected is $+\pi$L to $-\pi$L i.e. around 4-5 sleepers on either side.

1.2.8 Point of contra flexure is at a distance of $\pi$L/4 and, therefore, **nearby wheel loads between $\pi$L/4 and 5$\pi$L/4 w** will provide relief in bending moment in the rail and therefore relief in rail stresses.

With single wheel load at

X=0; $BM_{x=0} = QL/4$ whereas,

If, two loads are say at x=0 and x=$\pi$L/2,

Then,

$B.M._{x=0} = QL/4(1-0.208)$

$= 0.792.QL/4$ i.e. $< QL/4$

**Therefore, highest rail stress under a group of loads spaced at regular interval is less than under a single wheel load**.

1.2.9 Stress in rail = $\frac{BM.}{\text{Section Modulus}}$

$= (Q/4) \times (\sqrt[4]{(4EI/UI)}\ x\ (1/\text{Section Modulus})$

Accordingly, **stress in rail can be controlled by**

- **Controlling wheel load (static + dynamic augment)**
- **Change of section.**

1.3.0 **Dynamic augment**

This is somewhat independent of axle load, however depends on

(i) Maintenance standard of rolling stock

(ii) Maintenance standard of track

(iii) Track stiffness

***stiffer the track bed** ↑(i.e either on account of using concrete sleeper of on account of caked up cushion)

**More will be dynamic augment↑**; yet **another negative point of concrete sleeper track.**

(iv) Speed

(v) Type of rolling stock (unsprung mass)

- More than unsprung mass, more will be dynamic augment.

1.3.1 Double action of increase in U on increase of Qs i.e. rail seat load – firstly because of para 1.2.1 followed by para 1.3 (iii) above.

- Hence increase in ballast pressure and formation pressure as well.

1.4.0

| Sl. | Parameters to be controlled | Primary factors to control (i.e. other factors will only have marginal effect) |
|---|---|---|
| i) | Stress in rail | Wheel load failing which rail section to be changed |
| ii) | Load at rail seat (required for design of sleeper) | Track elasticity, sleeper spacing |
| iii) | Pressure at the interface of ballast-sleeper | Sleeper area |
| iv) | Formation pressure | Depth of construction |

2.0 **What is a Modern Track?**

2.1 **In modern track, two birds are killed with one stone.** Both the causes of rapid track deterioration i.e. high frequency vibrations (of the order of 800-1000 Hz., acceleration of the order of 100g. Amplitude of the order of 0.1mm) **and hammer blows at the joints are eliminated at the same time.**

- Since the generation of high frequency vibration can not avoided because of metal to metal contact, only **recourse is to dampen these** high frequency vibrations which are in fact responsible for:

i) Loosening of fastening consequentially loss of toe load,

ii) Loosening of of ballast,

iii) Real cause of general fatigue because of number of cycles of alternate stress adding up to a very large figure everyday.

iv) Rail corrugation.

- **Rigid fastening with damping is not possible.** In fact, such an arrangement behaves worse than rigid fastening without damping because the initial dynamic play or gap in rail sleeper assembly causes impact and intensive fatigue. **The fastening has to be elastic so** as to allow vertical movement of rail corresponding to high frequency vibrations but should keep the rail pressed to the pad with great stress i.e. permitting relative movement of rail but without having any play or gap.This type of suspension is also called **damped elastic suspension without play** and permits rail to vibrate for these high frequency vibrations without imparting any movement to sleeper. Ensuring of no gap situation, during the time lag between dissipating energy and absorbing energy, makes it possible to isolate rail and sleeper for high frequency vibrations.

2.1.1. Elastic fastenings were, therefore, evolved primarily with the object of dampening of high frequency vibrations.But its **by-product** has been to prevent longitudinal movement between rail and sleeper and, therefore, the result also has been to solve in the most economical way of getting rid of rail joints (hence, the development of long rails (LWR/CWR) and thus killing two birds with one stone.

2.1.2 LWR track requires **concrete sleeper** to be used **because** the weight of concrete sleeper is so designed that it negates the tendency of lifting of sleeper under moving load (para 1.2.5) and thereby minimizing loss of frictional resistance mobilized at the bottom of sleeper because of decrease in effective weight of sleeper. Incidentally heavier is the weight of sleeper, more is the ballast resistance on account of friction between ballast core and bottom of sleepers and more so in case of concrete sleeper with indented bottom surface.This friction between ballast core and bottom of sleepers contributes for major part of ballast resistance.

2.1.3 As observed, fall out of the above is to preferably make use of concrete sleepers which **in turn generates a track of higher track modulus.**

2.2 **It, therefore, calls for handling a track which has got higher track modulus hence,**

- Rail seat load (Qs) to be more – (para 1.2.1) and accordingly ballast pressure & formation pressure to be more.

- Inbuilt tendency for increasing dynamic augment (para1.3.0) and, therefore, wheel load to be more and accordingly

i) Bending moment in rail and accordingly stresses in rail to be more (para 1.2.9)

ii) Further increase in Rail seat load (Qs) (para 1.1.3) and accordingly in built tendency for stresses in rail, formation and ballast pressure to be more.

2.2.1 It needs to be appreciated that increment in static rail seat load on account of increase in track modulus is small **but** increase in dynamic augment is considerable.Similarly, there is **net increase in rail stresses** on account of increase in wheel load due to increase in dynamic augment because of track of higher track modulus.It would be, therefore, desirable to tighten track tolerances on PRC track **so as to counter the in-built tendency for increase in dynamic augment.** It is important **more so**(repeat more so) as brought out in the ensuing paragraph.

2.3 **Introspection of the Value of Dynamic Augment Taken on IR for Calculation of Rail Stresses**

2.3.1 **Unfortunately,** the values of dynamic augment on IR are available for tracks **other than** concrete

sleeper tracks and for normal standard of track maintenance.The value of dynamic augment taken for calculations on IR from the graphs as per C-100 **generaally of the order of 50%.**

2.3.2 The practice of determining speed effects on some of the European Railways, is as under:

Mean stress in rail = $\sigma$ =QL(4 section modulus), which is independent of running speed while its variance depends on running speed as well as state of track. Accordingly,

**Maximum stress in rail = $\sigma$max $\sigma$=max (1+t s)**

Where,

t = confidence interval (since rail is important for safety and reliability of rail traffic, t is taken as 3 so that chances of exceeding maximum calculated stress is only 0.13%) and

S = Variation coeff.

= 0.1$\phi$- for very good tracks

= 0.3$\phi$ – for moderate tracks

$\phi$ = (V-60)/140 +1; V = speed in km/h

Now, if V = 130 km/h, then $\phi$ = 1.5

And, therefore, s = 0.15 – for very good track

= 0.45 – for moderate track

Now, for t = 3,$\sigma$max accordingly varies from 1.45 $\sigma$mean to 2.35 $\sigma$mean and, therefore,

**Dynamic augment varies between 45% -135% for a very good track to moderate track.**

It is in this context track engineers on Indian Railways, have to **introspect for the standard of track maintenance** for which the system envisaged can be considered to be valid for PRC track in the light of the value of dynamic augment, taken for calculations on IR from the graphs as per C-100, being of the order of 50%.

Since, fort= 3 (i.e. situations likely to cover 87% of data) and at a spped of 130 kmph dynamic augment of the order of 45% is for a very good track, it is to be inferred that **assessmentof rail stress calculations** on IR, takes into account dynamic augment for wheel load corresponding to a very good track and not at all for normal standard of track maintenance.

2.3.3 The above, therefore, explains the reasons as to why wheel load observed generally on PRC track by WILD is more than 50%.Besides this, there is:

i) Further loading on rail stress on account of provision of long rail.

ii) Addition dynamic load on wheel flat of 60m length for depth of flat upto 1.4mm is 5t/mm on concrete sleeper while 3t/mm on wooden sleeper track.

**Accordingly, maintenance standard on PRC track in view of para 2.3.2, therefore, has to be commensurate to the dynamic augment adopted for calculation of rail stress.**

2.4 **Management of Occasional Overloading/Over-Speeding**

The effects of overloading/over speeding can now be envisaged to be **much more detrimental** on track of higher track modulus i.e. concrete sleeper. **There is, therefore, all the more reason to control factors which are at your command e.g. track/ weld irregularity affecting dynamic augment.**That is why CRSs sanction many a times does specify the level of track maintenance/level of rolling stock maintenance necessary to be ensured at the time of introducing new rolling stock. **Accordingly, managerial decisions for occasional overloading/ over speeding call for tightening of tolerances for maintenance of track and rolling stock and thus controlling dynamic augment.** Large scale track renewal cannot be organized overnight and such managerial decisions in field are, therefore, required to be taken care of by improving the standard of maintenance of track/rolling stock. **After all, the dynamic effects of a smaller axle load on a moderate track at times may be worse than a higher axle load/higher speed on a very good track.**

2.5 Permitting higher and higher track standards in above situation alone may not be enough to control rail stresses and cycle of rail renewal. **Management of track of higher track modulus and management of occasional overloading/over-speeding, therefore, calls for very high standard of track maintenance.**

2.6 **What was the 1st stage of Birth of Modern Railway Track?**

2.6.1 Both the Causes of Rapid Ballast Degradation i.e. high frequency vibrations and hammer blows at the joints got taken care of by one stone at the same time in 1950.

2.6.2 In 1950 , generation of high frequency vibrations of the order of 800-1000 Htz (Acceleration of the order of 100g, amplitude 0.1mm) was accidentally noticed by **French Scientists.** Since generation of these cannot be avoided because of metal to metal contact hence recourse open was only to dampen by use of rubber pad.

2.6.3 Rigid fastening with damping is not possible.

2.6.4 Hence evolution of Elastic rail Clip to permit vertical movement of rail corresponding to high frequency vibrations but without any play or gap. →ELASTIC SUSPENSION WITHOUT PLAY.

2.6.5 Primary objective of dampening high frequency vibrations thus achieved by Elastic fastening. **BYPRODUCT** OF ELASTIC FASTENING **WAS LWR** because relative movement between rail and sleeper got prevented.

2.6.6 Now LWR essentially needs **Concrete Sleeper, the weight of which negates the tendency of lifting of sleeper under moving load.**

2.6.7 Now concrete sleeper generates a track of higher track modulus, the characteristic of which is higher dynamic augment --. Hence **need to control track geometry.**

2.6.8 Now concrete sleeper generates higher ballast pressure & higher formation pressure hence **need to have ballast of higher standards & formation rehabilitation/ improvement.**

2.7 **Now what will Lead to 2nd Stage of Birth of Modern Track?**

2.7.1 Symptoms → Rehabilitation/ improvement of formation as necessary, to control plastic deformation could not keep pace with the introduction of heavy duty track because of high speed, higher axle loads and increasing GMT and further necessitated by the advent of concrete sleeper track increasing FORMATION PRESSURE.

For calculation purpose, track is approximated to continuous elastic bed supporting a bending beam (Rail) of infinite length. Elastic bed →A reservoir to absorb energy and distributes load to a larger number of sleepers. RESILIENCE OFFERED BY THE TRACK BED IS THE MOST IMPORTANT FUNCTION OF BALLAST BED. This necessitates integrity of ballast bed, to remain clean, to be maintained.

2.7.2 Increasing challenges before track engineers therefore are :-

a) Ballast Bed –to continue to function on a sustained basis as a reservoir to absorb energy.Elasticity & Resilience to remain intact for a longer period.

b) Reduction of stresses to an acceptable level at the sub-grade top . This necessitates **appropriate depth of construction** (i.e. depth of ballast + depth of sub-ballast ).

c) Prevent interpenetration of ballast into fine grained soils.

**All these necessitate to appreciate :-**

a) The role of sub-ballast /blanketing layer **many a times is different from the commonly understood** role of sub-ballast as structural member only.

b) The role of sub-ballast /blanketing layer as separating layer **cannot be subdued.**

c) Further increasing depth of ballast beyond a certain level is **counter –productive** as it is reported to aggravate instability of ballast bed.

d) Provision of adequate required depth of construction by the increased requirement of depth of blanketing/ sub ballast is **many a times highly cost prohibitive** in as much as any compromise under compulsion with the depth of blanketing/ sub-ballast, maintenance in long run becomes a casualty.

2.7.3 All these challenges get multiplied because of considerable length of track on Indian Railways continue on weaker soils imposing permanent speed restrictions. On new constructions, other germs get into track system because of practical constraints in non-availability of good soil for embankment, in ensuring quality of blanketing material and ballast particularly when need gets actuated to control time over-run as well as cost over-run in completing projects.

2.7.4 All these germs can be taken care of by one stone Geo –synthetics- Judicious Use of Geo-Textiles / Geo-Grid/ Geo-Composites with Reinforcements/ Geo-Composites with Drainage.

2.7.5 A 'rightly picked' geo-textile works as a separating layer enabling to maintain the thickness and integrity of the granular layers and increasing track life.The geo-textile prevents pumping of fines from subgrade upward into granular layers which otherwise may reduce the strength and drainage capacity of these layers. It reduces the penetration of granular particles into soft sub-grade. Resistant to puncturing having minimum puncturing strength of the order of 1500N and aperture size compatible with the particle sizes to be retained, ensure geo-textile to carry out its functions.

2.7.6 Geo-grid improves interlocking/ anchorage of ballast hence better dispersal. Improvement of interlocking/ anchorage leads to increase in load distribution angle and reduction of lateral strain of the subgrade through soil-geogrid interaction. It increases the load bearing capacity due to better stress distribution. A 'rightly picked' geo-grid having higher tensile strength at 2% strain absorbsstress with low deformation on soil say 1.5 % -2% and shows better interaction between geo-grid and surrounding soil. Varieties of geo-grid are available which mobilises 15% of UTS to 40% of UTS of 30kn/m at 2% strain. The deformation is 3 times more in case of geo-grid with 15 % of tensile strength than in case of geo-grid with 40% of tensile strength at 2% deformation. (Comparable radial stiffness at low strain @ 0.5 % may be 550-600 kn/m). Best in class Geo-grid mobilises more of surrounding soil mass due to friction between go-grid and the soil mass. Use of geo-grids, reinforces the sub grade and reduces stresses at the sub-grade top.

2.7.7 Stretches of weak formation cannot be attended by providing Geo grid 'alone' without any arrangement to take care of infiltration of fines. The basic requirement for ballast bed to remain clean on sustained basis to function as reservoir to absorb energy cannot be lost sight of. Compulsions do exist at site which restricts provision of blanketing material while laying geo-grid, at the time of rehabilitation. In view of the role of Geo-textile as separating layer, provision of Geo –grid laid on Geo-textile provide the solution. The geo-composite available with reinforcement are now available and are being extensively used for new track and rehabilitating existing track on quite weak formations all over the world Railways.

2.7.8 The bye product and other intangible gains of using Geo-synthetics are:-

a. Improving stability of track – improved ballast resistance and thereby reducing the need of using DTS

b. Life of Ballast more so when it is difficult to procure 'Premium Ballast of proper grading and proper hardness'

c. Improving resilience and there by contributing in ensuring good riding, controlling rail fractures and breakage of springs.

■■■

**Railways to install 35000 CCTVs in 1000 Stations for Women Safety**

New Delhi: A plan to set up 35,000 CCTV cameras that scan every corner of 1,000 railway stations across the country is the NDA government's latest bid to make woman passengers feel safer. This would be the biggest surveillance system installation by Indian Railways ever.

Following a meeting at PMO last month, Railways has drawn up this plan that would utilise Rs 500 crore from Centre's Nirbhaya Fund. Signifying priority of the project, Finance Ministry sanctioned it within three days of the meeting at PMO and allocated Rs 200 crore of dividend-free money for this financial year so that work can begin at once. The balance amount will be given next year.

Railways has accorded this project top priority, with Chairman of Railway Board personally monitoring its progress, sources have told. Last week, Railways included this project in the list of works to be done in 2016-17. Railways will be submitting a monthly expenditure report of utilisation of Nirbhaya Fund to Women and Child Development ministry, which is the nodal authority.

According to sources, the PMO has told Railways that the PM wants the CCTV coverage to be used to monitor station cleanliness as well. The ministry is drawing up a plan in this regard.

Railways has drawn up a list of 1,000 stations (981 to begin with) and has instructed zonal authorities on how much money they would be allowed to spend on the project this year.

Railways plans to install at least 35 CCTV cameras in each station and link the feeds to a server at its divisional headquarters. This feed will be preserved for 30 days. Eventually, all servers might be enabled to converge at one place for a more central monitoring, if needed, sources said.

The hallmark of the project is that bigger stations aside, small stations, right down to category 'C' stations — suburban stations and stations in tier-II cities and towns — have been included in this project. Care has been taken to ensure that the project does not overlap with the existing, now age-old project of installing surveillance cameras in 200-odd stations, said sources.

**Source: http://www.railnews.co.in**

# Impact of Change in Geography due to Urbanisation/Development in Catchment Area and Consequent Effect on Waterway Requirement of Bridges

By
R.N.Sunkar*

## I. Preamble

Human being keeps on modifying the environment especially land use/land cover (LULC), in pursuance of excel, comfort and development. The subsequent impact of urbanization to the environment, especially land cover change, now occurs on scales that significantly affect hydrologic variations. The altering environment makes it necessary to understand and quantify various hydrological components for efficient water resource management and for assessing correct design discharge of Railway Bridge.

## II. Surface Runoff

As a simplified mechanism precipitation falls on the land, flows overland (runoff), and runs into rivers, which then empty into the oceans. This water which flows over the surface runs into a river is defined as surface runoff.

Factors affecting surface runoff

1. **Meteorological factors affecting runoff:**

- Type of precipitation (rain, snow, sleet, etc.)
- Rainfall intensity
- Rainfall amount
- Rainfall duration
- Distribution of rainfall over the drainage basin
- Direction of storm movement
- Precipitation that occurred earlier and resulting soil moisture
- Other meteorological and climatic conditions that affect evapotranspiration, such as temperature, wind, relative humidity, and season

*CBE/WCR

2. Physical characteristics affecting runoff:

- Land use
- Vegetation
- Soil type
- Drainage area
- Basin shape
- Elevation
- Topography, especially the slope of the land
- Drainage network patterns
- Ponds, lakes, reservoirs, sinks, etc. in the basin, which prevent or delay runoff from continuing downstream

**3. Human activities can affect runoff**

*Erosion casued by surface runoff*

As more and more people inhabit the Earth, and as more development and urbanization occur, more of the natural landscape is replaced by impervious surfaces, such as roads, houses, parking lots, and buildings that reduce infiltration of water into the ground and accelerate runoff to ditches and streams. In addition to increasing imperviousness, removal of vegetation and soil, grading the land surface, and constructing drainage networks increase runoff volumes and shorten runoff time into streams from rainfall and snowmelt. As a result, the peak discharge, volume, and frequency of floods increase in nearby streams.

**4. Urban development and flooding**

Urbanization can have a great effect on hydrologic processes, such as surface-runoff patterns. Imagine it this way: in a natural environment, think of the land in the watershed alongside a stream as a sponge (more

*Impervious surfaces and urbanization affect runoff characteristics in the metro Atlanta, Georgia area.*

precisely, as layers of sponges of different porosities) sloping uphill away from the stream. When it rains some water is absorbed into the sponge (infiltration) and some runs off the surface of the sponge into the stream (runoff). Assume a storm lasting one hour occurs and one-half of the rainfall enters the stream and the rest is absorbed by the sponges. Now, gravity is still at play here, so the water in the sponges will start moving in a general downward direction, with most of it seeping out and into the stream banks during the next day or two.s

**III. Estimation of Design Discharge for Waterway of Bridges on Indian Railway**

a) The estimation of design discharge for waterway of bridges is done on Indian Railway as per guidelines given in para 4.2 of sub structure code.

b) As per this it shall preferably be based, wherever possible, on procedures evolved from actual hydro meteorological observations of the same or similar catchments.

c) All bridges shall be designed with adequate waterway for design discharge(Q). This shall normally be the computed flood with a probable recurrence interval of 50 years.

1. **Methods of Estimation of Design Discharge**

a) Where stream flow records (yearly peak discharges) are available for the desired recurrence interval or more, the design discharge shall be the computed flood for the desired recurrence interval.

b) Where such records exist for lessthan the desired recurrence interval, butare of sufficient length to permit reliable statistical analysis, the design discharge may be computed statistically for the desired recurrence interval.

c) Where records of floods are not of sufficient length to permit reliable statistical analysis but where rain fall pattern and intensity records are available for sufficient length of time and where it is possible to carry out at least limited observations of rainfall and discharge, unit hydrographs based on such observations may be developed and design discharge of the desired recurrence interval computed by applying appropriate design storm.

d) Where such observations, as mentioned above, are not possible, a synthetic unit hydrograph may be developed for medium size catchment (i.e. area 25 sq km or more butless than 2500 sq km) by utilising established relationships as mentioned in Flood Estimation Report for respective hydro-meteorological subzone.

e) For small size catchment (less than 25 sq.km), design discharge may be estimated using the techniques described in RDSO report no.RBF-16, titled as "Flood Estimation Methods for Catchments Less Than 25Km$^2$ in Area".

**2. Limitations and assumptions of the standard methods:**

In field, most of the time,the design discharge for bridges are calculated based ona synthetic unit hydrograph developed for medium size catchment by utilising established relationships as mentioned in Flood Estimation Report for respective hydro-meteorological subzone.

**Assumptions of the method are as under:-**

a) It is assumed that 50-yr. return period storm rainfall produces 50-yr. flood.

b) A generalised conclusion regarding the base flow and loss rate is assumed to hold good during the design flood event.

c) The catchments used in the analysis are treated as homogeneous.

**Limitations of the method are as under:-**

a) The method would be applicable for reasonably free catchments with interception, if any, limited to 20% of the total catchment. For calculating the discharge, the total area of the catchment has to be considered.

b) The generalised values of base flow and loss rate has been assumed to hold good for the whole Subzone. The designer may adopt other suitable values of base flow and loss rate as per site conditions.

c) The data of only 18 catchments have been considered for developing a generalised approach. However. for more reliable results, the data of more catchments uniformly distributed would be desirable.

*After urbanisation/ development in the part of the catchment,the above assumptions are not hold good. Therefore, the result of peak flood discharge calculated by synthetic unit hydrograph method would not give correct value of peak flood discharge for the bridge.*

**3. Impact of Urbanisation**

a) The process of urbanization has a considerable hydrological impact in terms of influencing the nature of runoff and other hydrological characteristics, delivering pollutants to rivers, and controlling rates of erosion.

b) At different stages of urban growth, various impacts can be observed . In the early stage of urbanization, removal of trees and vegetation may decrease evapotranspiration and interception and increase stream sedimentation.

c) Later, when construction of houses, streets, and culverts begins, the impacts may include decreased infiltration, lowered groundwater table, increased storm flows, and decreased base flows during dry periods.

d) After the development of residential and commercial buildings has been completed, increased imperviousness will reduce the time of runoff, concentration so that peak discharges are higher and occur sooner after rainfall starts in basins. The volume of runoff and flood damage potential will greatly increase. Moreover, the installation of sewers and storm drains accelerates runoff. As a result, the rainfall–runoff process in an urban area tends to be quite different from that in natural conditions depicted in classical hydrological cycles. This effect of urbanization, however, varies according to the size of a flood. As the size of the flood becomes larger and its recurrence interval increases, the effect of urbanization decreases.

e) The integration of remote sensing (RS) and geographic information systems (GIS) has been widely applied

and has been recognized as a powerful and effective tool in detecting urban growth.

f) Remote sensing collects multispectral, multiresolution, and multitemporal data, and turns them into information valuable for understanding and monitoring urban land processes and for building urban land-cover data sets. GIS technology provides a flexible environment for entering, analyzing, and displaying digital data from various sources necessary for urban feature identification, change detection, and database development

**A case study to assess the impact of urbanisation :-**

A case study to assess the impact of urbanisation was done,details are as under:-

**Paper:- "Urbanisation effect on hydrological response: A case study of Asan River watershed, India" published in 2012*

*Authors:-Vaibhav Garg, Ampha Khwanchanok, Prasun K. Gupta, S.P. Agarwal, Komsan, Praveen Thakur and Bhaskar Nigam.*

Asan River watershed, which lies in Dehradun, capital of newly created Uttarakhand Statewas studied. A huge industrializationhasbeen taken place within this watershed immediately after declaration of state in year 2000. Initially, LULC change detection analysis was carried out by simple LULC class area difference between ten years under consideration i.e. 2000 and 2010.

According to Leopold (1968), among all land use changes affecting the hydrology of an area, urbanization is by far the most forceful. It was reported that there are four interrelated but separable effects of land use changes on the hydrology such as changes in peak flow characteristics, changes in total runoff, changes in quality of water and changes in the hydrologic amenities.

The foremost observation, when a watershed in its natural state is being transformed as a result of urbanization, is increase in runoff volume.

**A case study to assess the impact of urbanisation :-**

Another case study to assess the impact of urbanisation was done

**Paper:- "Analysing the impact of urban areas patterns on the mean annual flow of 43 urbanized catchments" published in 2015*

*Authors:-B. Salavati, L. Oudin, C. Furusho, and P. Ribstein*

*It suggested that:-*

a) In some cases, urbanization increases peak flow.

b) While in other cases the results were opposite, i.e. urbanization decreases peak flow

c) However in some study, no significant relationship between the two was concluded

From the above study it is very clear that the straight relationship cannot be established until unless detailed study in each and every case is done.

**IV. Effect of the Development in Catchment Area And Consequent Effect on Waterway Requirement of Bridges.**

The following case studies carried out for Railway bridges are presented below for appreciation.

**(A) Bridge NO. 815/2 (on Kerwan River) in Bhopal division of West Central Railway:**

Bridge no. 815/2 (6 X 12.2 m) (on Kerwan River) falls between Misrod (MSO) and Mandideep (MDDP) stations in Bhopal (BPL)- Itarsi (ET) route of WCR. At present, there are two railway bridges one on each existing UP and DN railway track.

In year 1963-65, the DN line bridge was constructed. The UP line bridge is older. Later in year 1976, a Dam on upstream namely Kerwan Dam was completed by State Government.

The construction of above Dam has resulted in change of catchment area of Kerwan River for flood consideration for bridge. To find out change in Flood discharge for bridge consequent upon construction of Dam, simplified approach given in Para 1.2.1 (Flood Formula) in Flood Estimation report issued by Central Water Commission (CWC) for Betwa Subzone 1 (c) has been used as per para 4.3.4 of Indian Railway. The details of catchment area and Flood discharge before and after construction of Dam is as given below-

| Status | Location of Bridge (Km) (Approx.) | Catchment Area of River (Sqm) | Flood Discharge ($Q_{50}$) by Flood Formulae (as per para 4.3.4 of sub-structure code) (Cum/sec) | Spillway Discharge (Cum/sec) | Design flood Discharge for railway bridges (Cum/sec) |
|---|---|---|---|---|---|
| Before Construction of Kerwan Dam | - | 189.596 | 1454.57 | - | 1454.57 |
| After Construction of Kerwan Dam | 33 (D/S of dam) | 84.714 (catchment area D/S of dam) | 744.71 | 453.00 | 1197.71 |

*NOTE- As per RDSO, letter no. CBS/DBR/IMP, dated 27.11.15 (Guidelines of RDSO approval of Planning and DBR for Important Bridges), for Railway Affecting Works the Spillway discharge shall be taken into consideration. Hence, the full spillway discharge of Dam considered.*

Thus due to the construction of the dam, the total waterway requirement has reduced from 1454.47 to 1197.71 cumec.

**B) Bridge No. 817/1 (on Kaliasote River) in Bhopal division of West Central Railway:**

Bridge no. 817/1 (5 X 18.3 m) (on Kaliasote River) falls between Misrod (MSO) and Mandideep (MDDP) stations in Bhopal (BPL)- Itarsi (ET) route of WCR. At present, there are two railway bridges one on each existing UP and DN railway track.

In year 1963-65, the DN line bridge was constructed. The UP line bridge is much older. Later in year 1988, a Dam on upstream namely Kaliasote Dam was completed by State Government.

The construction of above Dam has resulted in change of catchment area of Kaliasote River for flood consideration for bridge. To find out change in Flood discharge for bridge consequent upon construction of Dam, simplified approach given in Para 1.2.1 (Flood Formula) in Flood Estimation report issued Central Water Commission (CWC) for Betwa Subzone 1 (c) has been used. The details of catchment area and Flood discharge before and after construction of Dam is as given below. It is to mention that at upstream of Kaliasoteriver, the Bhadbhada Dam was constructed in year 1965 which outflowed directly to Kaliasote river (before construction of Kaliasote Dam) and now into Kaliasote Dam.

| Status | Location of Bridge (Km) (Approx.) | Catchment Area of River (Sqm) | Flood Discharge ($Q_{50}$) by Flood Formulae (as per para 4.3.4 of sub-structure code) (Cum/sec) | Spillway Discharge (Cum/sec) | Design flood Discharge for railway bridges (Cum/sec) |
|---|---|---|---|---|---|
| Before Construction of Kaliasote Dam | - | 81.06 | 950.53 | 810 (Sluice discharge of Bhadbhada Dam) | 1760.53 |
| After Construction of Kaliasote Dam | 22 (D/S of dam) | 66.393 (catchment area D/S of dam) | 805.25 | 1355 (Kaliasote) | 2160.25 |

*NOTE-As per RDSO, letter no. CBS/DBR/IMP, dated 27.11.15 (Guidelines of RDSO approval of Planning and DBR for Important Bridges), for Railway Affecting Works the Spillway discharge shall be taken into consideration. Hence, the full spillway discharge of Dam considered.*

Thus increase is due to the construction of the dam, the total waterway requirement has increased from 1760.53 to 2160.25 cumec.

**C) Bridge 768/1on Tawa River between Sontalai-Bagratawa station at chainage 3600m in Jabalpur division of West Central Railway:**

An important BRIDGE 768/1 (4 x 61.57m + 2 x 40.23m) on TAWA River lies between Sontalai-Bagratawa station at chain age 3600m in Jabalpur division of West Central Railway.The proposed Sontalai-Bagratawa Doubling BG rail line passes through district Hosangabad of M.P. state.

The bridge on the existing line was constructed in the year 1870. In the year 1978, Tawa Dam was commissioned at 5.78 km upstream of the existing bridge. The observed flood discharge before the dam construction was 24300 $m^3/s$. From the dam, the design spillway discharge is 18405.95 $m^3/s$.

Now a proposed bridge is to be constructed for doubling

the rail line which is situated at 610m downstream of the existing bridge. Waterway requirement for the proposed bridge is affected by the spillway discharge of the dam and in addition the remaining catchment area in the downstream of dam upto the bridge (23 $Km^2$) which worked out to be 574.95$m^3/s$. Hence, the total waterway for the proposed bridge is figured out to be 18980.90 $m^3/s$ (Spillway discharge 18405.95 + remaining 23 $Km^2$ runoff 574.95 $m^3/s$) against 24300 $m^3/s$ (observed flood discharge before construction of the dam)

| Status | Location of Proposed Bridge (Km) (Approx.) | Catch-ment Area of River (SqKM) | Flood Dis-charge (Cum/ sec) | Spillway Discharge (Cum/sec) | Re-maining catch-ment dis-charge (Cum/ sec) | Total Discharge (Cum/sec) |
|---|---|---|---|---|---|---|
| Before Con-struction of Tawa Dam | - | 5982.9 | 24300 | - | - | 24300 |
| After Con-struction of Tawa Dam | 6.39 (upstream from bridge) | 6006.55 | - | 18980.90 | 574.95 | 18980.90 |

Thus due to the construction of the Tawadam, the total waterway requirement for railway bridgehas reduced from 24300 to 18980.90cumec.

**D) BRIDGE 55 on Kalisindh River:**

A railway bridge is proposed which islocated at 900m upstream fro man existing road bridge. Since the road bridge (was commissioned in 1988) is just on the downstream of railway proposed bridge, the relevant peak flood discharge will be same as that of the road bridge i.e. 21042 $m^3/s$.

After construction of new dam 800m upstream of proposed bridge, the relevant waterway requirment will be equal to 15402 $m^3/s$

| Status | Location of Proposed Bridge (Km) (Approx.) | Flood Discharge (Cum/ sec) | Spillway Discharge (Cum/ sec) | Total Discharge (Cum/sec) |
|---|---|---|---|---|
| Before Con-struction of Dam | - | 21042 | - | 21042 |
| After Con-struction of Dam | 0.8 Km (up stream from bridge) | - | 15402 | 15402 |

Thus there is a reduction of from 21042 to 15402 cumec in the total discharge in the proposed bridge due to the construction of the dam.

**E) BRIDGE 647/4 on Machak River**

An accident occured on 04.08.2015 as a result of breaches on the approach of bridge 647/4 which is a minor arch bridge 360m away from Machak river.

The machak river bridge 647/2 is a major bridge (Span-10 X 9.15 PSC slab) on the Machak river.

In the catchment of Machakriver, Amakhal dam has beencommissioned in 2014 which is 33 Km upstream from the bridge site. The catchment area of Amakhal Dam is 54 $Km^2$nearly 7% of catchment area of Machak River (768.5 Sq.kms).

A road bridge (Rolgaon road bridge span-3x20m+2x15m= 90m) has also been constructed by MPPWD 10.5 Km upstream of the railway bridge.

On 04.08.2015 a rainfall of around 290mm occured in the catchment of machak river. The peak discharge resulting from this rainfall could have passed through the bridg safely as such rainfall had occured twice (2012 & 2013) in past 5 year. But due to thethe commissioning of Amakhal dam and Rolgaon bridge (span- 3x20m+2x15m= 90m) with high embankments on bridge approaches, thus catchment has undergone major changes.

1. On 04.08.2015, due to continious rainfall of high intensity, the spillway discharge from the amakhal dam was at its maximum (387 $m^3/s$). In addition to that

runoff water from the remaining catchment of 34km downstream river also contributing their discharge.

2. The study revealed that very heavy intensity rainfall occurred in 4 hrs.

| Time (from- to) | Rainfall (in mm) |
|---|---|
| 8AM – 4 PM (on 4.8.15) | 17.81 |
| 4 PM to 7.40PM (on 4.8.15) | 115.46 |
| 7.40PM to 8.45PM (on 4.8.15) | 38.49 |
| 8.45 to 9.30 PM (on 4.8.15) | 13.88 |
| 9.30PM of 4.8.15 to 8.00 AM of 5.8.14 | 129.00 |
| Total | 1.64 (say 315 mm) |

i.e. Out of total rainfall of 314.64mm estimated, 167.83 mm (115.46+38.19+13.88) occurred in 5 hour 30 minutes only (From 4:00pm to 9:30pm).

3. The Rolgaon bridge approach were acting virtually like a dam which got washed out due to heavy intensity rain coupled with the peak discharge of Amakhal dam. Due to the washout of approaches of Rolgaon road bridge (span- 3 x 20m + 2 x 15m = 90m) water with very high velocity gushed to the railway bridge 647/4 approaches which was only 10km down stream to the road bridge near Machak river.

Thus due to combined effect of Amakhal tank and Rolgaon bridge (with high embankment and spill through type abutment with no wings and return wall) has result in the breach of the railway bridge 647/4.

Effect of commissioning of Amakhal damand construction of Rolgaon road bridge in 2014.

| Status | Location of Bridge (Km) (Approx.) | Catch-ment Area of River (Sqm) | Spill-way Dis-charge (Cum/ sec) | Total Dis-charge (Cum/ sec) |
|---|---|---|---|---|
| Before Con-struction of Amakhal Dam | - | 768.5 | - | 3239.10 |
| After Construc-tion of Amkhal-Dam (2014) | 33 | 768.5 | 387 | 3938.16 |

Thus due to the construction of the dam and construction of Rolgaon road bridge the total waterway requirement has increases from 3239.10 to 3938.16 cumec.

Measures taken, being near Machak bridge, to avoid such incidents

1. Additional opening is being provided.
2. The bridge 647/4 has been declared as vulmerable and a watchman has been deputed for monsoon patrol.
3. Water level monitering system is being installed.
4. Amakhal dam is being included as RAW/RAT.
5. State govt. has been asked to modify the abutments and provide wings/return walls.

## V. Conclusion

Change in the geography due to development of catchment area has consequent effect on waterway requirement of bridges. This report tried to quantify the impact of urbanization on runoff yield on 5 different catchments in the West Central Railway. In many case the development has a positive effect by reducing the waterway discharge as it is seen the first, third and fourth cases (1st case- Bridge 815/2 on Kerwan River, 3rd case- Bridge 768/1 on Tawa River and 4th case- Bridge 55 on Kalisindh River)discussed above. But sometimes the development has adverse effect as also seen in the second and fifth case (2nd case- Bridge 817/1 on Kaloasote river and 5th case- Bridge 647/4 on Machak River)where the dam construction resulted in increase in the discharge.

Therefore in order to understand the impact of change in geography due to urbanisation or development in catchment,for each and every case detailed study must be done to arrive at the revised waterway requirement of a Railway Bridge.

■■■

# LHB(Linke Hoffman Bush)Coaches

By
Surendra Kumar Bansal*
Mathew Varughese**

**Synopsis:**
*A brief description of LHB coaches in Indian Railways, it's benefits over conventional ICF coaches and Fiat bogie and its major features.*

## 1. Introduction

Till recently, Indian Railways have been transporting passenger traffic mainly through coaches of ICF design. These coaches are being manufactured at ICF and RCF. A limited number of these coaches are being manufactured at BEML/Bangalore also.

These type of coaches are having limitations in terms of-

i) Speed potential;
ii) Heavy corrosion;
iii) Poor riding comfort;
iv) Wearing of parts in the under gear;

To over come these limitations, Indian Railways entered into supply and technology transfer contracts with M/s. ALSTOM LHB/Germany to initially supply 24 coaches consisting of 19 AC chair cars, 2 AC Executive Class Chair cars and 3 Generator cum Brake vans. The bogies for these coaches are manufactured by M/s. FIAT/SIG

Switzerland. These coaches arrived in India and got commissioned in the year 2001and put in service . These type of coaches are far superior w.r.t. passenger comfort, safety, speed, corrosion, maintenance and aesthetics. These coaches are also longer ascompared to ICF design resulting into more carrying capacity. The expected benefits from these type of coaches are as under:-

**2. Functional Benifits :** The expected functional benefit from these type of coaches are as follows.

2.1 Higher carrying capacity - These coaches are about 2 meters longer than ICF coaches. With this extra length two additional rows of chairs in chair cars or one additional bay in sleeper oaches can be accommodated.

2.2 The weight of LHB coach is lesser as compared to ICF design coaches. LHB coach can accommodate 72 passengers as compared to 64 in conventional AC-III Tier Coach. Thus giving better pay to tare ratio in comparison with conventional ICF coaches.

2.3 Low corrosion – There will be low corrosion of LHB coaches due to extensive usage of stainless Steel and better design and manufacturing techniques.

2.4 Low Maintenance – Replacement and removal of sub-systems will be required only after one million kilometres.

2.5 LHB Coaches have aesthetically superior interiors with FRP (Fibre reinforced plastic) panels for side wall and roof. They can be removed easily for maintenance, resist water seepage and are wear resistant.

2.6 There are no visible screws inside the passenger compartment.

2.7 Better passenger comfort: Better Riding Index has been specified as compared to conventional ICF coaches.

2.8 LHB coach offers better passenger safety due to use of fire retardant materials for furnishing.

* *Sr. Prof. (Project) / IRICEN*
** *Sr. Inst./Mech.-I / IRICEN*

**3. Bogie-** LHB coaches have been provided with two FIAT Bogies per coach.

*Fiat Bogie.*

The FIAT ( Fabrica Italina de Automobil Torino) bogie is an adoption of EUROFIMA design. This bogie belongs to the two-axle type, with a primary and a secondary suspension The bogie frame consists of two side members of Y-shaped longitudinal beam connected by two tubular steel members. The Y shaped side members consist of structural steel and welding is done to form box sections. Minimum strength of the structure is 52 kg/mm$^2$ with D class weld. Bogie is designed for maximum operating speed of 160 kmph and has potential for operation upto 200 kmph. Axle guidance is provided by an articulated control arm through a resilient bush.

This is a two stage suspension bogie. The car body directly rests on the secondary stage helical springs, which rests on Y shaped side beam. The bogie frame rests on primary stage helical spring which are resting above the axle box crown. The tracking and braking force from axle to bogie frame is transferred through articulated control arm system of primary suspension.

Bogie is capable to permit the coach body to negotiate curve of 175 m radius atmaximum speed potential of 40 kmph and 1 in 8 1/2 turn out in either direction at 30kmph.

### 3.1 Technical details of the Bogie

| | |
|---|---|
| Wheel base. | 2560mm |
| Diameter of new wheel | 915mm |
| Diameter of maximum worn wheel | 845mm |
| Distance between the wheels. | 1600mm |
| Bogie disc diameter | 640mm |
| Bogie width | 3534mm |
| Bogie weight | 6300kg |

### 3.2. Fiat Bogie

3.2.1 This bogie is two axle type. The bogie frame consist of two side members of Y shaped longitudinal beam, connected to two tubular steel members. Bogie is designed for maximum operating speed of 200 kmph

3.2.2 Axle guidance is provided by an articulated control arm through resilient bush.The bogie having two stage suspension system.. Car body directly rests on secondary stage helical springs

3.2.3 Secondary suspension springs rest on Y shaped side beam. Bogie frame rests on primary stage helical springs.

3.2.4 Primary stage helical springs rest above the axle box crown.Traction and braking forces from axle to bogie frame transferred through control arm system of primary suspension.

3.2.5 Each bogie consists of four numbers of primary vertical dampers, two numbers of secondary vertical dampers, two numbers of yaw dampers and one number of secondary lateral suspension damper.

3.2.6 The hydraulic dampers has been provided to damp the acceleration caused due to track irregularities and opposing force depending on the speed of the movement.

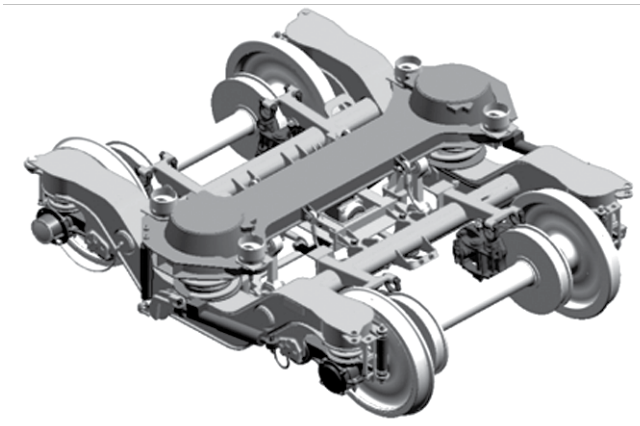

*Fiat bogie*

### 3.3 Primary suspension

The primary suspension consists of two coil springs, one vertical damper, an articulated control arm fitted with twin-layer elastic joints connecting the axle bearing to the bogie frame for curve negotiation.

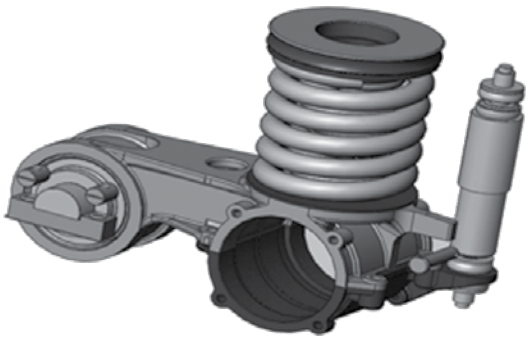

*Primary suspension.*

### 3.4 Secondary suspension.

- The Secondary suspension consists of nested flexi-coils springs (inner and outer springs), rubber spring, vertical dampers, lateral dampers, anti-roll bars, traction rods etc.
- The rubber pad is inserted below and above secondary springs provides flexibility towards the end of springs.

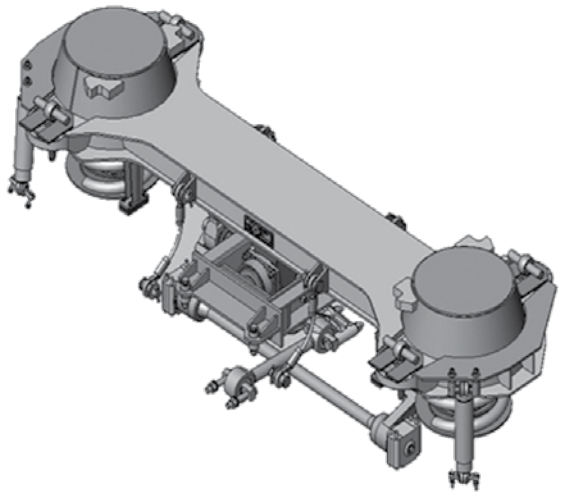

*Secondary suspension.*

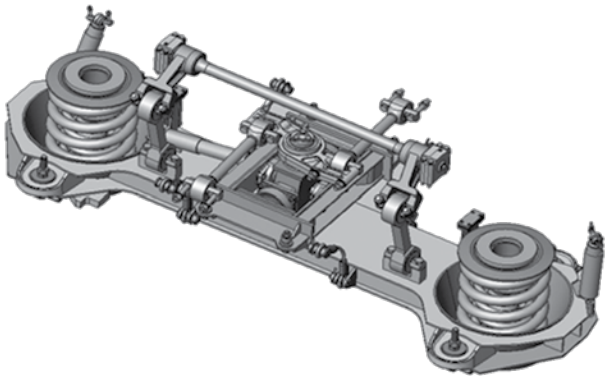

*Secondary suspension up side down*

### 3.5 Braking System

Axle mounted disc brakes are provided in Fiat bogie.

Air brake system is provided in LHB coaches. In the airbrake system compressed air is used for operating the brake system. The locomotive compressor charge the system throughout the length of the train. The brake application take place by dropping the pressure in the system.

The brake caliper units consist essentially of the brake cylinder, the brake caliper, and the brake shoes. While applying the service brake, it charges the brake cylinder and presses the brake pads against the brake disc. Brake force is built up and pads are applied on the brake discs.

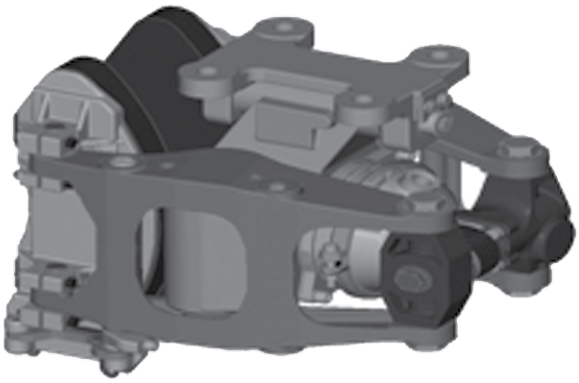

*Brake caliper unit.*

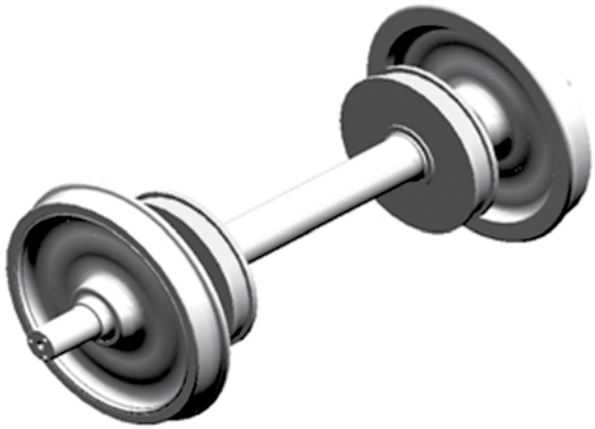

*Wheels with brake discs.*

### 3.7 Axle Bearings

A taper roller cartridge type bearing is used and it makes up a pre assembled unit. The axle bearings on the bogie are fitted with sensors for detecting

speed (whose signal is elaborated by the anti slipping system) and a current return device.

The ends of the control arms are fitted with centering devices for the primary suspension spring assembly. The bearing lubricating plug is fitted in the lower part.

*Cartridge type Roller bearing.*

**4. Schedule of maintenanceof LHB coaches**

**Schedule Periodicity**

| | |
|---|---|
| Trip Schedule D1 | Every Trip/Weekly |
| Monthly Schedule/D2 | 30 days ± 3 days |
| Six Monthly Schedule/D3 | 180 days ± 15 days |
| ( Shop Schedule I) /SS-I which ever is earlier | 18 Month±30 days/6 Lakhs Kms earned |
| Shop Schedule II / SS-II | 3 Years/12 Lakhs Kms earned whichever is earlier |
| Shop Schedule III/SS-III | 6 years/24 Lakh Km earned whichever is earlier. |

4.1 Trip schedule, Monthly Schedule and six monthly schedule are conducted in primary maintenance depot, where as shop schedules SS-I,SS-II and SS-III are conducted in specified workshops.

4.2 All spare parts of LHB coaches are not manufactured in our country. Many are imported components.

**5.0 Draft gear.**

The connection between two adjacent vehicles within a train set is done by a "Coupler System" consisting of the coupler itself and a draw and buffing gear.

The centre buffer couplers used on LHB coaches are tight lock centre buffer couplers of AAR type H. They can be coupled with AAR type "E" centre buffer couplers fitted on locomotives.

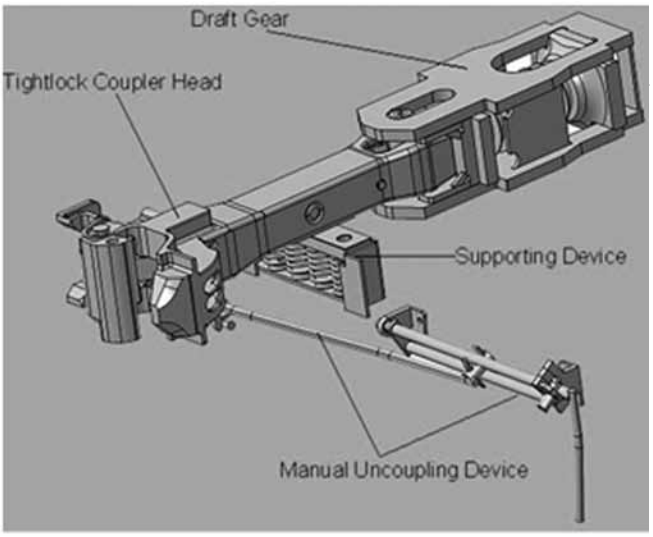


*Coupler assembly.*

**6. Conclusion.**

LHB coaches which are fitted with Fiat bogies are relatively having very good performance except occasional detachment of some coaches during maintenance due to wheel defects.

**References.**

1. Maintenance manual of B.G. coaches of LHB design
2. Carriage and wagon engineers hand book/SWR
3. Hand book of C&W supervisors /STC/JHS/NCR
4. wikipedia.org/wiki/LHB coach
5. www.rdso.indianrailways.gov.in
6. www.railnews.co.in

■■■

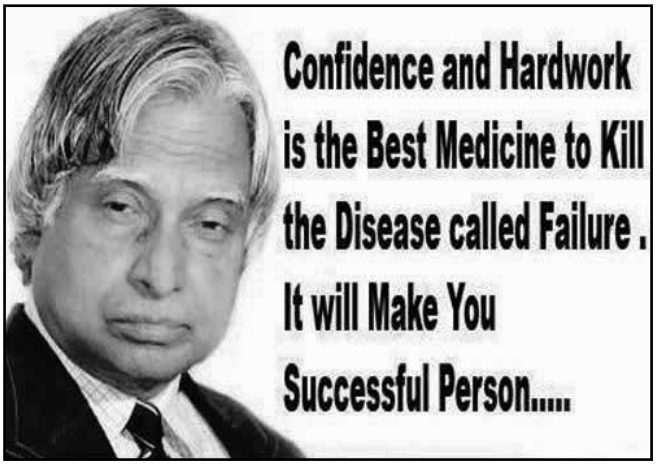

# Formation Treatment by Blanketting (Track Dismantling Method)

By
R.Nandagopal*

## 1.0 Abstract

Formation plays key role in good performance of track and yielding formation becomes a bottle neck in running of traffic to its full potential. Improvement of the track system has been mainly to track superstructure, i.e.rails, sleepers, fastening etc. Track sub-structure below ballast had received relatively less attention. Use of poor subgrade soil material has resulted in quitea few sections on Indian Railways being under speed restrictions, resulting incostly maintenance. Due to the demands for faster and heavier transports, railway structures experience problems, such as reduced stability, increase of settlements, and possibility of extensive vibrations. These issues have an adverse effect on the safety, reliability, and economy of the railway operations. Therefore, existing formation requires treatment or up gradation to meet out the demand. This paper deals with the problems due to poor formation, various methods to treat such formation in brief and replacement of formation material with moorum in detail.

## 2.0 Introduction

Formation is the man made structure with the available material in the vicinity of track or from places which suites the specification. During construction in olden days more emphasis were not given to the material of formation and by considering economy and progress, earth available in the vicinity was utilized to make formation even if that of poor quality. With passage of time, increase in speed, increase in carrying capacity of trains and due to the inherent properties of the formation materials, formation started showing weakness in terms of cracks, bulging, and settlement. This has severely affected the stability of track structure, made it out of alignment, resulted in isolated settlement and surface undulation.

Due to these problems continuous attention to the track structure and maintenance has been done. Further speed restrictions in those stretches are common in order to run the trains safely. Due to increased maintenance activities and continues speed restriction, full potential of these stretches were not utilized resulting in heavy loss of punctuality, cost and wastage of man.

Occurrence of unstable formation due to foreseen or unforeseen reasons is the bane of all railways. Stretches of unstable formation, with or without speed restriction, are potential constraints against utilizing line capacity and introducing heavier axle load traffic. In addition to this, there is huge expenditure involved in maintaining such stretches because of avoidable loss of ballast and the frequent tamping effort.

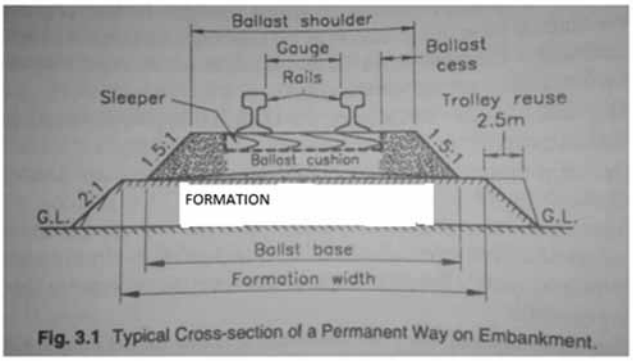


**Fig. 3.1** Typical Cross-section of a Permanent Way on Embankment.

Section of Permanent Way

Railway formation may develop instability for reasons of poor bearing capacity of formation, inadequate factor of safety against slope stability, excessive settlement, subgrade attrition due to mud pumping and loss of soil from formation on account of erosion, ants, termites, burrowing animals etc. Formation failure may be on one account or in combination. Existence of one or more of these causative factors may lead to development of others. The problem of formation failure is quite severe on Indian Railways, owing mostly to poor soil type.

More than 700 km track is under permanent speed

* DEN/West/Salem

restriction, and about three times that is put under temporary SR(speed restriction) during monsoon season every year. Formation failure for poor bearing capacity, alone or in combination, comprises most of the unstable stretches (about 95% or so). Increase in axle load & GMT also have a significant effect on bearing capacity of formation. Therefore, strengthening of formation against bearing capacity failure is the most important rehabilitation work.

**3.0 Causes of Unstable Formation:**

Excessive and frequent disturbance to the levels at rail top may occur to one of the following:

- Ballast attrition
- Subgrade attrition and mud pumping
- Consolidation settlement
- Volume change of subgrade due to moisture content variation
- Progressive shear failure from repeated wheel loading.

**4.0 Railway Board has laid down a 5-step action plan be followed first before undertaking other rehabilitation measures. (Ref: letter dt 4.7.91).**

- Make the formation width, cess level and side drains strictly in accordance with prescribed profile.
- Carry out shallow screening of ballast section (or deep screening where required).
- Ensure no loose or missing fitting.
- Increase the depth of ballast section to 30cm or even up to 35cm.
- If the problem still persists, increase sleeper density to 60 cm c/c spacing or even upto 55* cm c/c spacing.

*Spacing of 55 cm withdrawn subsequently due to problems with machine packing.

**5.0 Methods of Rehabilitation of Unstable Formation:**

Development of unstable formation is preventable in all the cases by proper designing and execution. However, either due to lack of knowledge or considerations of economy, formation construction did not receive the attention it deserved. Moreover, increase in axle loads and the GMT have put that addition stress on the formations that might have been in conceivable at the time of construction. So multitudes of solution had been tried for rehabilitation of failing formations over Indian Railways. Some of them provided a short-term relief. However, since most of them aimed at symptomatic relief, they were bound to fail in the long run. A comprehensive list of these measures tried in the past is given below.

**5.1 Lime Pile & Lime Slurry Pressure Injection:**

This method was used for bearing capacity failure and/ or excessive swelling & shrinkage of soil. Unslacked lime reacts with the inter molecular surface water of clay and change its plasticity properties. As notable improvements were not felt RDSO is generally not recommending this method any more. ( RDSO's letters No.RS/G/72 dated 28/11/86 & RS/F/53 dated 18/9/92). Example: at locations km 1/1-15/7, 41/11-42/1 etc in patches; Panskura - Haldia section; S.E.Rly.; year 1991-95.

**5.2 Cement Grouting:**

Injected under pressure to improve bearing capacity but It does not help as only localized lumps are formed making soil mass further heterogenous in character. There is no change in chemical characterstics of soil. Example: km 364/3-10; Up Line; Section, Baptala-Tsunduru; S.C.Rly; year 1977.

**5.3 Vinyl drains:**

Vinyl drains get twisted, thus, become ineffective. These drains also cause more of problem for change in track rigidity resulting into rough running and twist defects in track (RDSO's letter No.RS/G/72 dated 28/11/86 & RDSO's report no. SMR/Consultancy/ SC/12-1989). Example: location : km 359/8 - 360/3, DN line, between stations Bapatla & Tsunduru; S.C.Rly.; year 1970.

**5.4 Open cross drains filled with coarse grained material:**

It causes more damage than being useful .Drains taken upto toe of embankment did not succeed as the coarse material filled in drain was washed away. Example: location : km 431/2 (40m), between staions Mankatha & Barhiya, Danapur Division, E.Rly.; year 1992 ; speed restriction- 70 kmph.

**5.5 Sand Blanketing:**

In which layer of sand placed between formation and subgrade to accelerate consolidation, in some cases sand is dumped from BOBYN so as to penetrate into ballast and formation and further improve drainage.

But this has clogged the ballast drainage, sand came out caused havoc while speeding train and washed away during rain. Example Madurai-Virudhunagar section of Madurai division, S.R

**5.6 Geotextiles & Geogrids:**

Rehabilitation of formation using non-woven Geotextiles and Geo grids is being used widely nowadays. Geogrids are placed between ballast and formation so as to avoid ballast puncturing and keep ballast mass intact and have better interlocking. Geo textiles are used between formation and weak subgrade to avoid moisture ingress into formation and better load distribution.

**6.0 Replacement of Formation Material:**

All the methods discussed above either improve the formation material properties or improves the drainage or accelerate the consolidation of formation or improves the load distribution pattern. But the parent material of the formation remains same. Though there would be initial success in adopting these methods, in long term the problem due to poor formation haunt us back. Permanent solution to the bad formation would be replacement of the poor material with better one. Depth of replacement will depend upon the axle load, stress distribution, feasibility and over all cost of the work.

The material to be replaced should have the following properties:

- Bring imposed stress (induced stress) caused by repetitive loading within permissible stress (threshold stress) in formation to prevent permanent /plastic deformation in subgrade,
- Reduce thickness of ballast to minimum requirement of maintenance,
- Improve resiliency & energy absorption of moving load , and
- To act as separation layer between ballast and sub-grade to prevent percolation of water to soil and mud pumping.

Moorum is such a material which satisfies all the above properties and as per soil classification it should fall under the category of GW-SW (well graded gravel – well graded sand). Further it should be ensured material to replaced should satisfy the following soil properties so as to have desired results.

- Coarse, granular and well graded.
- No skip grading is allowed.
- Particles finer than 75 microns can be permitted upto 5% if fines are plastic and the limit can be increased to 12% if the fines are non-plastic.
- Uniformity coefficient, ( $D_{60}$ / $D_{10}$ ), in no case should be less than 4. Preferably it should be more than 7 to avoid liquefaction under train vibrations.
- The coefficient of curvature ( $D_{30}^2$ / $D_{60}$ X $D_{10}$ ) to be within 1 & 3.
- The particle size gradation curve should more or less lie within enveloping curves

**7.0 Methods of Formation Replacement:**

Depending upon the technology availability, block time, scope of work, location and economy, various method of replacement of poor formation material has been adopted worldwide. Some of the methods are as follows

- With Aluminum Alloy Girder
- Track Dismantling Method
- With manually operated portals.
- With CC crib & rail clusters (SE Railway Method)
- With rail Clusters (Eastern Railway Method)
- Lifting of track with deep screening.
- Fully mechanized method.

The choice of choosing these methods and the success of any procedure of replacement of formation of required standard depends on its

- Cost effectiveness
- Progress per hour of traffic block, including minimum block time required
- Speed restriction and extent of speed restriction
- Cost of machinery and manpower involved
- Feasibility of execution (as per various site conditions)
- Safety risk involved during execution.

**8.0 Formation Treatment with Moorum by Track Dismantling:**

Formation treatment with moorum blanketing by track

dismantling method was done at km 283.700 to 285.200 down line in Jolarpettai Salem section. The entire stretch is situated in black cotton soil having shallow depth of formation made up of same black cotton soil. Due to frequent disturbance of track parameter this stretch has been attended manually as well as tamped regularly with machine. As the track was lifted, tamped and ballasted regularly, in this stretch clear ballast ranges between 400mm to 700mm. This has further caused floating and instability.Details of manual/machine tamping,done for the past three years is given in the following chart.

**9.0 Soil Properties of Existing Formation:**

Formation and subgrade soil in this location was black cotton soil. From the test results it can be noted that almost more than 75% of soil particles are passing through 75micron sieve and plasticity index of the soil is more than 30 (High plasticity). From the tamping/ attention chart, it can be noted that more than 6 times a year spot attention or machine tamping has to be done in this location. As the manual tamping was not given any improvement and further deteriorate the track condition, manual attention was stopped and only machine tamping was done in recent past.

**Details of The Section and Location**

| | |
|---|---|
| Engine Run Section | Jolarpettai to Salem of Southern Railway |
| Block Section | Buddireddipatti (BDY) and Bommidi (BQI) |
| Location | Km 283.700 to 285.200 Dn line |
| Annual GMT | 38.64 |
| Sectional Speed | 110Kmph |
| Track Structure | 60kg, PSC, 1660 density |
| Ballast Cushion | 400mm to 700mm |
| Bank height | Average 1.3m |
| Formation and subgrade | Made up of Expansive black cotton soil |
| Alignment | Curve of 0.35degree |

Moorum blanketing by track dismantling method was chosen for this location as it needed complete replacement of black cotton soil, moorum is easily available in nearby vicinity, reasonable block time was available without regulation of important trains, proper compaction of newly laid layer can be ensured, speed restriction was needed for relatively lesser period, cost per km is reasonable and trains can be allowed immediately after block time safely. Test results showing the soil properties and classification of the parent soil and the moorum used for treatment is given in tabulation.

**Execution of Moorum Blanketing**

**10.0 Pre Block Activities:**

As the entire location is of black cotton soil and fields are closer to track, approach road along the track was laid so that moorum can be collected, stacked. Further road was needed for mobilization of material and movement of heavy machineries. Sufficient amount of moorum was collected based upon need and tipper lorry was kept ready for shifting of moorum. Moisture content of material was regulated and by constantly watering it. Speed restriction of 20kmph was imposed and the LWR was isolated by cutting into 10 rail panels (130m). These 10RP are replaced with ten 13m rail panel (Front substitution) so as during block time as a panel the track can be dismantled.

**11.0 During Block:**

After line & power block 13m panel of track was removed with two number of Hitachi/poclian machine hooking at already marked location. Depending upon block time total number of panels to be dismantled was decided before and accordingly done during block time. Normally for a block time of 4hours, 6 numbers of 13m panel can be dismantled. Front substitution of sufficient length has to be made for subsequent day work. Initially tyre mounted hydra crane was utilized for dismantling of track. Due to clay nature of surrounding soil and restriction in side wise movement of hydra crane the progress was slow so crawler mounted machinery which can move sidewise also is essential for better progress and safe execution.

*Dismanting of 13m Panel of track*

Dismantled panels were kept at starting and end of that day's work, one above another so that relaying can be done easily and sufficient space would available for movement of machineries. With third Hitachi clean ballast was scooped and kept aside, away from the track. Once the track was completed dismantled, both the Hitachi come back and excavate the formation to the desired depth. The depth of excavation varies from 300mm to 400mm depends upon the existing formation depth.

*Scooping of Clean Ballast and Keep Aside Along Track*

*Excavation of Formation Mixed with Ballast*

Moorum collected along the track was watered regularly so as to have needed moisture content to achieve atleast 98% of maximum dry density(MDD)

*Dumping of Moorum Collected Along the Track*

Spread moorum was rolled with 200KN vibratory roller. Number of passes mainly depends upon the density to be achieved (98% of MDD). As the depth of completed moorum layer was about 600 to 700mm moorum was dumped in two layers and both the layers were compacted with the vibratory roller separately. Total top width of formation compacted was 7.8m. Inorder to ensure proper depth, levels were taken continuously with leveling instrument.

*Compaction of Dumped Moorum in Two Layers by Vibratory Roller*

*Ballast Put Back and Rolled without Vibration*

Once the moorum was rolled by required number of passes, samples for conducting density test (core cutter method) were collected and tested at site itself. All the samples collected were passed and having dry density of 98% of MDD. Entire test result is given in tabulation. After proper rolling the clean ballast kept along the track was scooped put back on formation. With the roller, without vibration ballast was compacted to have a firm bed. This has saved lot of time in ballasting, lifting and packing manually. As the ballast was rolled it became firm and above which already released panels were re-laid and linked. Immediately after linking of track, traffic was allowed with restricted speed.

Originally the work has been planned to complete within 48 days of block days (3 hrs to 3.55hrs per day). Due to rain and diversion of certain trains block was not available for 11 days in the initial period but by coordinated planning and execution entire work was completed within 26 block days itself, thereby saving 11 days. The work was taken under minimum line block of 2.30hrs to maximum block time of 3.55hrs. Maximum progress achieved was 72m and that can be achieved consistently if proper planning is done.

1493 track meter length of formation was replaced with moorum for top width of 7.8m.Total cost to execute this work was 70lakhs.

**Test results of the compaction of treated formation and progress of entire work is given in the tabulation.**

*Panel Relaying and Track Linking*

*List of Men and Machineries utilized for the work*

| | |
|---|---|
| Hitachi/Poclain 200/220 | 3 numbers |
| JCB | 1 number |
| Tipper for shifting moorum | 1 number |
| Tractor with water tank | 1 number |
| Vibratory Roller of 200KN | 1 number |
| Rail drilling machine | 2 number |
| Rail cutting Machine | 2 numbers |
| Multi utility vehicle | 1 number |
| For Front and back substitution | 20men |
| During block working | 24men |
| Welding | 8men |
| Protection of track | 2men |

**11.0 Post Block Activities:**

Under traffic condition, further ballasting of crib and shoulder was done. All 13m service rails were replaced and renewed with already released 130m rails and welded together. Subsequently the LWR was destressed and speed restriction was relaxed after two rounds of machine tamping. Cess of the entire stretch was widened with the caked up ballast removed and cross drain with boulders were provided every 50m so as to further accelerate draining of rain water from formation.

**12.0 Conclusion:**

Formation treatment with moorum by track dismantling method replaces entire poor material in the formation/ subgrade and gives a permanent solution for the track instability. This method can be executed in limited block time and speed restriction can be relaxed within shorter span. As the rolled moorum bed is firm, trains can be allowed to pass safely. This method can be adopted if formation is to be replaced by 600mm to 700mm of moorum layer in shorter block of 3 hours itself. Further per km cost of this method is relatively cheaper and economical.

**Reference:**


1. Strengthening Methods for Subsoil under Existing Railway Lines.

   A. Smekal,Banverket, Borlänge, Sweden

2. Guidelines and Specifications for Design of Formation for Heavy Axle Load,

   Report No. RDSO/2007/GE: 0014

3. State of the art Report on Quality of Blanket Material on Railway Formations,

   Report No. GE- 37

4. Deep-Slope Stabilization Using Lime Piles, C. D. F. ROGERS AND S. GLENDINNING

5. Report on Various Methods of Formation Rehabilitation on, REPORT NO. GE-39 (FINAL)


■■■

# Environmental Aspects in Railway Construction Projects

By
Sunil Kumar Yadav*

## 1.0 Introduction

Environment in general refers to the surroundings of an object which may be natural or the built environment. Environmental management is essentially the management of interaction by modern human societies with, and its impact upon the environment. The National Environment Policy 2006 which articulated our national commitment to a clean environment as mandated by the Constitution was intended to mainstream environmental concerns in all current and developmental activities. The principal objectives of the National Environment Policy include conservation of critical environmental resources and to integrate environmental concerns into policies and projects for economic and social development. Further, one of the principles of this policy clearly states that environmental protection shall form an integral part of the developmental process to achieve sustainable development and cannot be considered in isolation.

## 2.0 Need for Environment Related Clearances

Satisfaction of needs/aspirations of maximum number of human beings is the goal of economic activities in any State, for which, among others, Earth's natural resources are utilized. On-renewable resources need to be utilized carefully because of their being finite (known at any giving point of time) hencethe terms sustainability / intergenerational equity comes into picture.Intergenerational equity is a concept that says that humans 'hold the natural and cultural environment of the Earth in common both with other members of the present generation and with other generations, past and future'. Renewable resources need to be managed /utilized even more carefully simply because of their being renewable and the fact they can be always available if used within their regenerative capacity

## 3.0 Index of Economic Growth??

Gross Domestic Product – GDP is the broadest quantitative measure of a nation's total economic activity. More specifically, GDP represents the monetary value of all goods and services produced within a nation's geographic borders over a specified period of time. It does not take into consideration the reduction in capital assets.(GDP – 3.8% pa in 1950s to 5.2% in 1997-2003, 8.7% in 2003-06. ~ now 4-5 % )

Net National Product - a better choice as it takes into account changes in physical assets.

Green NNP - in addition to change in natural resources base and accounts for environmental consequence of that growth.

## 4.0 Development – Sustainable?

Development largely focuses on economic activities and on projects creating newer infrastructure facilities and making available consumer products to the people, generally without due regard to environment. Is this real development? No it is not sustainable.

**Sustainable Development** – to bridge the gap between ecology/environment & development and is defined as *"development that meets the needs of the present generations without compromising the ability of future generations to meet their own needs"*

*Dy Chief Engineer (Con)-Vi, HWH, Eastern Rly

**Three pillars of Sustainable development**

Environment, Society, and Economy

Environment existed before Society and Society existed long before Economics was invented. With evolution & development the sequence got reversed. Economics started playing a dominant role.

**Society first bothers about Economy and then looks into Environment**

Logically environmental stability should take precedence as the basis of life on Earth. Society should come next, as without people economy and markets do not exist.

If we fail to correct our priorities, and to limit consumption of resources in time sooner than later we are dead.

**Society has to mediate between environment & economics.**

## 5.0 Global Initiative on Environmental Concerns

UN Conference on Human Environment 1972 underlined the need for more prudent care for environmental consequence of our actions and gave a call for preservation and improvement of Human Environment – acceptance of responsibility by citizens, communities, enterprises and institutions at every level.

UN Conf. on Environment & Development 1992

Inclusion of Social and Environmental dimensions besides economic aspects in

Millennium Development Goals (2000)

Goal 7 - Ensure Environmental Sustainability

Goal 8 - Develop A Global Partnership For Development

The Millennium Development Goals (MDGs) are the world's time-bound and quantified targets for addressing extreme poverty in its many dimensions-income poverty, hunger, disease, lack of adequate shelter, and exclusion-while promoting gender equality, education, and environmental sustainability.

RIO+20 .. Special focus on SDGs(Sustaiable Development Goals)

At the Rio+20 Conference, world leaders, along with thousands of participants from governments, the private sector, NGOs and other groups, will come together to shape how we can reduce poverty, advance social equity and ensure environmental protection on an ever more crowded planet to get to the future we want.

**Ongoing Global Dialogue on Climate Change** – United Nations Framework Convention on Climate **Changes(UNFCCC)** focuses on **reduction of GHG emissions, CDM, ..... etc**

India's **National Action Plan on Climate Change** (NAPCC) – 8 Missions incl. NM for Enhancing Energy Efficiency

**India's Legal Framework ~ Environmental Concerns**

Article 21 (Fundamental Rights) - "No person shall be deprived of his life or personal liberty except according to procedure established by law"

Article 48 A (Directive Principles of State Policy) - responsibility of the State Government to protect and improve the environment and to safeguard forests and wildlife

Article 51g (Fundamental Duties) - fundamental duty of every citizen to protect and improve the natural environment including forests, lakes, rivers and wildlife, and to have compassion for living creatures

Forest and Wild life on concurrent list (1976 Amendment).

Separate Env. & Forests Dept in 1980 ~ MOEF in 1985 as focal point for planning, promoting, coordinating environmental programmes. Now MOEF&CC

Legal Framework factoring in environmental concerns

The Water (Prevention and control of Pollution) Act, 1974

The Air (Prevention and control of Pollution) Act, 1981

The Environment (Protection) Act, 1986

EIA Notification 2006

Coastal Regulation Zone Notification 1991

National Environment Policy, 2006

National Forest Policy, 1988

The Forest Conservation Act, 1980

The Indian Forest Act, 1927

The Wild Life (Protection) Act, 1972

Addressing Environmental Impacts?

Ecological Economics – gradually ecological footprints are becoming important.

But the steps required in such analyses to mitigate environmental impacts are generally forgotten with provisions of funds or establishing/creating infrastructure with little regard to the functional aspects

Implementation and Enforcement to be ensured.

Cost benefit analyses need to factor in environmental costs.

## 6.0 Need for Environment Management in Indian Railways

The Railways as a means of public transportation are perceived to be environmentally friendly. The recommendations of the Expert Committee set up by the Planning Commission under the chairmanship of Dr. Kirit S. Parikh to formulate an integrated energy policy for promotion of the system of urban mass transport, energy efficient vehicles and freight movement by railways underline the significance of railways to over all environmental management in the country as well as of environment related issues in the internal governance of the Indian Railways (IR).'Environment' is a key survival issue and its significance has never been felt more acutely.

Railway is well knit/coordinated transport system necessary for sustained economic growth. Accounts for substantial & growing proportion of air pollution and contributes significantly to greenhouse gases emissions – being a major consumer of fossil fuels.

In India, transport sector contributed 7.3% to GDP in 1997/98 & Road transport and the railways account for majority of this contribution. Transport sector - second largest consumer of energy, next industry and commercial energy consumption (98% of which is in the form of HSD (High Speed Diesel) and gasoline, grew at the rate of 3.1% per annum in the 1970s and at 5.6% per annum in the 1990s .

Link between Transport and Environment in India is primarily through the use of fossil fuels. Railways is environmentally safer compared to road transport and hence preferable wherever feasible. With a vast network railways is the principal mode of freight and passenger transport in India - bulk carrier of several pollution intensive commodities like coal, iron ore, cement, fertilizers, petroleum etc. The network is required to expand to meet the needs of our developing society.

## 7.0 Environment Clearance for Railway Projects

Considering various aspects Railways has been kept out of the purview of the Environment Protection Act, 1986 .However, EIA and EMP is done for Railway Projects as required by mandatory Guidelines for Environmental and Social considerations of funding agencies (JICA/ADB/WB..).The impacts are assessed for all phases of project cycle: location, design, construction, and operation& impacts are categorized as negative and positive. Cost of management and monitoring programs are estimated and budgeted for the same.

### Other Environment Related Aspects

The Water (Prevention and Control of Pollution) Act, 1974 (Amendment 1988) – use ground water - CGWB

The Air (Prevention and Control of Pollution) Act 1981 (Amended 1987) – hot mix plants, crushers - SPCB

Noise Pollution (Regulation and Control) Rules, 2000

Municipal Solid Waste Rules, 2000 – disposal of bituminous / solid waste

The Environment (Protection) Act, 1986 - sand mining

The Indian Forest Act, 1927 – survey in forest areas

Forest (Conservation) Act, 1980 – diversion of forest land

he Wild Life (Protection) Act 1972 – passing through PA

The Ancient Monuments and Archaeological sites and Remains (Amendment and Validation Act), 2010

### Environment Consciousness

Being environmentally conscious, Indian Railways

is enhancing efforts to reduce its environmental foot prints: through use of eco-friendly materials, among other initiatives.

In Budget 2016-17 following important recommendations were proposed-

1. Use of land available adjacent to its rail network – leasing to promote horticulture and tree plantation.
2. Waste segregation and recycling centres at A1 category stations
3. Environmental accreditation, water management and waste to energy conversion.
4. Composite sleepers made up of recycled plastic waste in place of steel sleepers on girder/steel bridges.
5. Energy audits have revealed the possibility of reducing energy consumption in non-traction area by 10% to 15%
6. Policy guidelines and tender documents for 50MW solar plants at rooftop & wind mill power plant at Jaisalmer
7. Solar micro-grid on pilot basis – for clean and reliable power supply to railway stations

**ISO Certification**

ISO certification is an important initiatives

ISO 9000: Quality Management Standards

ISO 14000: Environmental Management System

ISO 18000: Occupational Health & Safety

*Budget 2016-17- proposes to convert all production units as well as at least one workshop in each Zonal Railway as green industrial unit by obtaining relevant certification, good energy management, sourcing energy from renewables, water conservation, improved green cover and environment friendly management of waste.*

*Shield on Environment for the best performing Zonal Railway or Production Unit.*

**Potential benefits of ISO certification**

- Meeting environmental obligations.
- Reducing environmental impact of operations developing/implementing a EM Policy (environmental aspects which it can control and which it can influence).
- Improvement in overall environmental performance.
- Framework for using pollution prevention practices .
- Increased efficiency and potential cost savings.
- More effective targeting of scarce environmental management resources.
- Enhance public posture with outside stakeholders.

**Environmental concerns**

1. Rules/guidelines for transportation of commodities, prima-facie, guided by commercial considerations.
2. No comprehensive guidelines specific to operation of sidings for handling and transport of pollution intensive commodities. Only partial compliance to statutory guidelines.
3. No system for monitoring the quality and quantum of waste water generated at stations
4. Inadequate / ineffective collection and segregation and disposal of plastic and other waste. Non segregation of degradable and non degradable wastes, inadequate storage facilities and improper disposal of garbage.
5. Inadequate measures to conserve the flora and fauna alongside the tracks - animal mortality due to train hits remained high.

Environment management need to be recognized, monitored and reckoned as a key result area for all Zonal and Divisional Railway Authorities

**Railway Projects involving Forest Areas**

**Forest / Wild Life Clearance**

When railways require land for expansion of its network - all land related laws are applicable – as land is very important and fixed resource and land use changes for infrastructure are generally irreversible.

In case a railway project involves forest land - provisions of FCA 1980 are attracted.

Also Wild Life Protection Act and Coastal zone Regulations if project involves Protected Area or is in CR Zone

**FCA 1980 – Why & What**

- Forest – unique natural and renewable resource, important for (Global/National) ecological stability & local livelihood support for FDP
- FCA, 1980 – Regulatory not prohibitory
- Non Forest use of Forest lands - for minimal adverse impact
- Diversion to be ordered by the State Government
- Prior Approval of GoI (to the state & on State's request) after detailed scrutiny by REC/FAC
- GoI approval (in principle & final ) with conditions for mitigating likely environmental impacts.

**FCA –Application**

- Whole of India except J & K
- ON de-reservation of forest lands and / or diversion of forest lands for non-forestry purposes.
- No change in legal status of diverted forest land
- IFA & State Forest Acts do not define "Forest"
- Apex Court's order of 1996 - the provisions of the Act to all areas recorded as forest in any Govt. record irrespective of ownership, and 'forests' as understood in the dictionary sense)

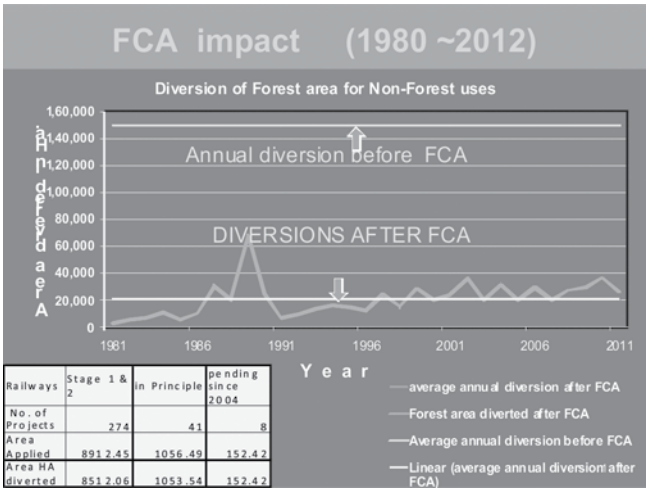


| Railways | Stage 1 & 2 | in Principle | pending since 2004 |
|---|---|---|---|
| No. of Projects | 274 | 41 | 8 |
| Area Applied | 891 2.45 | 1056.49 | 152.42 |
| Area HA diverted | 851 2.06 | 1053.54 | 152.42 |

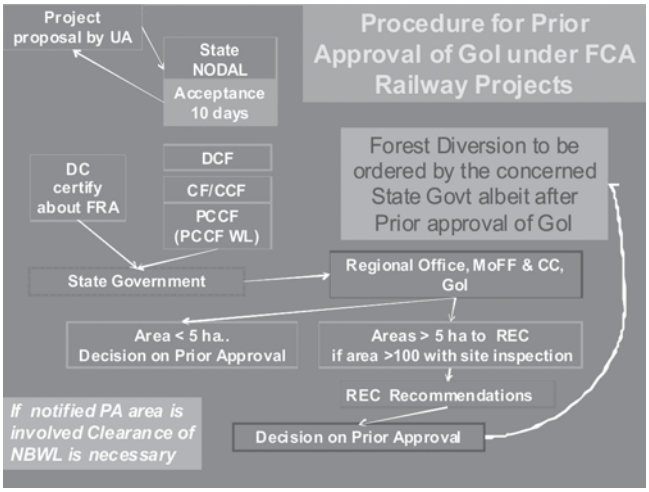


Application for GOI approval under FCA -

Registration for online application http://efclearance.nic.in

PP to submit proposal under FCA division/state wise for processing by the concerned Regional Office of MoEF&CC, GoI .

Linear projects involving several states/divisions to give complete alignment along with portions involving forest areas, forest areas already given clearance, and also details of earlier applications for same land, if any. Geo-referenced map of the forest area involved along with non-forest land required & map on original SOI topo sheet. DC's Certificate about settlement of rights under FRA .

Justification for the locating the project in Forest land and map indicating alternatives examined.

Employment generation – permanent / temporary

Displacement of people, if any.

Details of cost/benefit analysis.

Certificates/undertaking about CA/NPV Preliminary Joint Inspection Report, Details of trees, non-starting of work, land schedule, Muck Disposal Scheme, etc.

PP may attend meetings in RO / REC (but not mandatory)

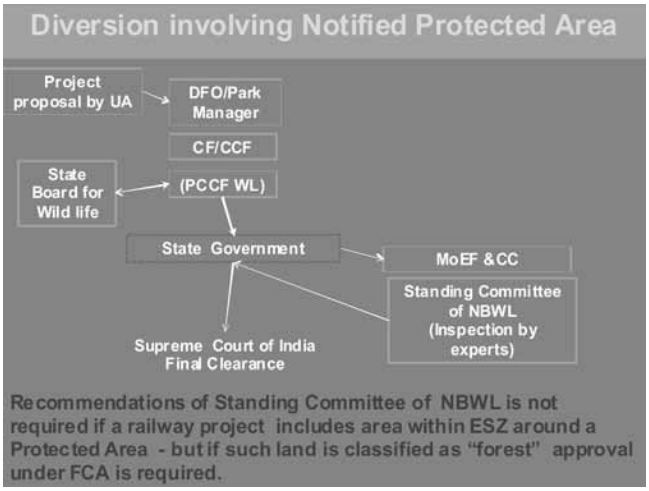


**Consequences of approval under FCA**

FCA approval in 2 stages Stage 1 (in principle) with conditions and payments to made (CA/NPV etc) – on compliance grant of Stage 2 (final approval).

Consequent to clearance from MoEF&CC diversion to be issued by the State Government and possession of forest land to be given by the concerned DFO.

Legal status of land remains unchanged – only permission to use for the purpose applied for – laying of track – does not confer proprietary rights – Forest and Wild Life Acts continue to be applicable.

For another use by another agency – requires approval of re-diversion by MoEF&CC.

Land earlier acquired by railways and planted up with trees requires FCA clearance if already notified as RF/PF.

For survey and investigation in forest areas not involving felling of trees clearance under FCA is not required but permission from the SFD under IFA is necessary.

For Survey and investigation within National Parks and Wild Life Sanctuaries as a prelude to future diversion of land permission under Wild Life Act 1972 is required .

**8.0 Impacts Due to Project Construction**

Construction activities in India have been pursued without giving much attention on environmental issues. This has resulted in pressure on its finite natural resources, besides creating impacts on human health and well-being.

Here we will focus only on impacts due to construction works only. To tackle the issues of related to environment Railways has set up Environmental Directorate at Board level and in zonal railways posts from executive level to SAG level has been created as Environmental and Housekeeping Managers considering the sensitivity of the matter. In operation related environmental issues will be dealt by them.

- **Soil Erosion and Soil Pollution**

  Though the project may not have significant impact on soil erosion, however, minor impact on soil erosion due to runoff from unprotected excavated areas may result in soil erosion, especially when erodibility of soil is high. Drainage pattern in nearby area also changes due to construction of embankments which may add to soil erosion at some places.Mitigation measures include careful planning, timing of cut-and-fill operations and revegetation. Problems could arise from dumping of construction soils (concrete, bricks), waste materials (from contractor's camp) etc. causing surface and ground water pollution. Hence, it is proposed to have Ready Mix Concrete (RMC) directly from batching plant for use at site. Batching plants should be located away from the site preferably, away from the human settlements.

- **Health Risk at Construction Site**

  Health risks during construction activity include disease hazards to workers due to lack of sanitary facilities like safe disposal of human waste and garbage clearance and disposal facility. In order to avoid such a situation, proper mitigation measures should be incorporated, which should include proper water supply, sanitation, drainage, healthcare and human waste disposal facilities in labour camps. In addition reduced contaminated water spillage and adoption of disease control measures should be adopted to reduce the health risks.

- **Air Pollution**

  The dust will be produced due to excavation, loading and unloading and transportation of construction materials, vehicular and construction equipment emission and emission from the DG sets etc.,. Air Pollution Control Measures During the construction period, the impact on air quality will be mainly due to increase in Suspended Particulate Matter (SPM) along haul roads and emission from vehicles and construction machinery. Though an air quality during construction shows insignificant impact, nevertheless

certain mitigation measures which shall be adopted to reduce the air pollution are presented below:

The Contractor shall take all necessary precautions to minimise fugitive dust emissions from operations involving excavation, grading, and clearing of land and disposal of waste. The Contractor shall use construction equipment to minimise or control of air pollution. Contractor's transport vehicles and other equipment shall conform to emission standards fixed by Statutory Agencies of Government of India or the State Government from any transport during handling of materials, construction or storage activity. The DG sets to be installed to provide power backup will adhere to the emission standards. The Contractor shall use cover for materials of dust generating like debris and soil being transported from construction sites. All trucks carrying loose material should be covered and loaded with sufficient free- board to avoid spills through the tailboard or sideboards. Contractor shall install barriers around the open construction sites before commencing the work. The temporary dumping areas shall be maintained by the Contractor at all times until excavate is re-utilised for backfilling wherever necessary or as directed by Employer. The Contractor shall place material in a manner that will minimize dust production. Material shall be wetted each day, to minimize dust production. The Contractor shall sprinkle water at construction sites to suppress dust, The Contractor shall provide a wash pit or a wheel washing and/or vehicle cleaning facility at the exits from work sites such as construction depots and batching plants. At such facility, high-pressure water jets will be directed at the wheels of vehicles to remove all spoil and dirt.

**Noise Control -** There may be an increase in noise level in ambient environment due to construction and operation of this rail corridor. The increase in levels is marginal; hence, local population will not be adversely affected. However the exposure of workers to high noise levels needs to be minimized. This can be achieved by job rotation, automation, protective devices, noise barriers, and soundproof compartments, control rooms etc. Earplug/ muffs, or other hearing protective wear will be provided to those working very close to the noise generating machinery. Special acoustic enclosures should be provided for individual noise generating equipment's, wherever possible. Pile driving operation can produce high noise levels which could be reduced by using a suitable sound absorbent. Safety precautions as stipulated in IS: 5121 (1969) 'Safety Code for Piling and other Deep Foundation' need to be adopted. Noise level from loading and unloading of construction materials can be reduced by usage of various types of cranes and placing materials on sand or sandy bag beds. Sound barriers are usually effective along route having fast traffic. The reduction in noise level increases with height of barrier.

- **Landscaping**

  The existing landscape (e.g mature trees) must be preserved to the extent feasible, during construction and during use . Sustainable landscape practices should be adopted to ensure erosion and sedimentation control, storm water management, minimized heat island effects and water conservation. Attempt shall be made to minimally disrupt natural site features e.g landforms, contours etc.

- **Conservation of Forests and Wildlife**

  Article 48 of the Constitution of India specifies that, "The state shall endeavour to protect and improve the environment and to safeguard the forests and wildlife of the country" and Article 51-A states that "it shall be the duty of every citizen of India to protect and improve the natural environment including forests, lakes, rivers, and wildlife and to have compassion for living creatures". Conservation of wildlife involves the protection of entire ecosystems. Trains can disrupt local ecosystems in irreparable ways. A diversity of flora and fauna live alongside the railway lines. The flora and fauna in some areas is sufficientlydistinctive to be of scientific value. To maintain operational safety, line side vegetations have to be managed in a sympathetic manner.

- **Afforestation**

  In terms of Para 702 of Indian Railway Works Manual (IRWM), each Division should prepare 'tree planting plan' for every subdivision and plantation work should be carried out accordingly. On all construction projects, provision should be made in the estimate for bulk afforestation in vacant land as an environmental improvement measure .

  The National Green Tribunal has been established on 18.10.2010 under the National Green Tribunal Act

2010 for effective and expeditious disposal of cases relating to environmental protection and conservation of forests and other natural resources including enforcement of any legal right relating to environment and giving relief and compensation for damages to persons and property and for matters connected therewith or incidental thereto. It is a specialized body equipped with the necessary expertise to handle environmental disputes involving multi-disciplinary issues. The Tribunal shall not be bound by the procedure laid down under the Code of Civil Procedure, 1908, but shall be guided by principles of natural justice.

The Tribunal's dedicated jurisdiction in environmental matters shall provide speedy environmental justice and help reduce the burden of litigation in the higher courts. The Tribunal is mandated to make and endeavour for disposal of applications or appeals finally within 6 months of filing of the same. Initially, the NGT is proposed to be set up at five places of sittings and will follow circuit procedure for making itself more accessible. New Delhi is the Principal Place of Sitting of the Tribunal and Bhopal, Pune, Kolkata and Chennai shall be the other four place of sitting of the Tribunal.

Order of the National Green Tribunal regarding felling of trees for linear projectsin the matter of Milind Pariwakam & Others Vs Union of India dated 20/02/2015 regarding felling of trees for linear projects-

Taking a serious view of the violation of the Forest (Conservation) Act, 1980 [FCA), by the Ministry of Environment and Forest, the Principal Bench of the National Green Tribunal restrained all agencies involved in linear projects (railway lines, roads, canals and power lines) from felling trees and diverting forest land for non-forest purpose unless the approval under the FCA, 1980 was obtained.

**9.0 Case Study :** Bardhaman – Katwa Gauge conversion project

An effort has been made by Howrah district of Construction Department of Eastern Railway to avoid cutting of trees falling in alignment of broad gauge line in lieu of Narrow Gauge line. Total length of project is 52.2Km and out of which around 26.0Km was already completed. All trees falling in alignment over this 26.0 Km were cut down and auctioned. For remaining 26.20Km the construction unit got changed and new team started thinking to avoid cutting of trees. It was planned to go for transplantation of around 200 no. of trees falling in alignment of new track.

**10.0 What is Tree Transplantation ?**

"Tree transplantation is a technical procedure for uprooting a tree from its original site to a new site, nearby or in a different location. It requires planning, engineering techniques and resources to successfully transplant a mature tree. Before transplantation, the physiological status of the tree should be ascertained in terms of its health, being disease-free and age. The new site where the tree would be transplanted should be prepared before uprooting the tree from its original location. A tree is a living organism and so, this procedure requires utmost care. The roots of mature trees spread, covering a large area around it, so this area should be demarcated. The removal of soil around this area should be done carefully so as to bring about minimum damage to the root ball. It should be protected and held in place carefully so that the entire root ball can be sunk into the new pit.

The soil in the new location should be well-aerated for the tree to acclimatise to its new surroundings. The aerial branches should not be trimmed heavily as the tree would need adequate food for survival, which the leaves would make. The success of the transplantation would depend on the precision of uprooting the tree from its original location to the new location with love and care and always keeping in mind the tree is being relocated from a region where it has spent several years and made friends in terms of compatibility with trees growing nearby and over a period of time, enriched the soil with rich micro flora in its rhizosphere. So transplant trees if there is no other option, but do it very gently, with the precision of a surgeon."

It was first time this work was to be done and neither contractors nor schedule of rates wereavailable in Eastern Railway. With the help of internet two companies were foun working in this field , one from Kolkata (M/s Flora International ) and other from Chennai (Jeyam Landscape Consultants) who shown interest in our work after we contacted them and they submitted their rates. Based on their rates schedule of items and unit rates were prepared and tender was called involving cost of ₹ 1516800/.

While vetting account department observed that " This work is being first time executed in E. Railway and no such provision exists in estimate. It should be clarified that why these trees are required to be transplanted. Generally trees falling in the alignment are auctioned and cut. Besides by way of auction, Railway gets a handsome amount of money. Work should not be executed if it is not included in the estimate. To expedite the earthwork, obtaining clearance for cutting the trees from forest department is better option, because expenditure to be incurred on this tender can be saved and Railway will get money by auctioning trees."

Executive replied that cutting of trees is not only crime against environment but also against our coming generations. Earlier this technique was not available so cutting of trees was only option but now when options are available then why Eastern Railway should not adopt it. We can not play with environment for petty amount of money. One has to be broadminded while dealing such issues. Work will be executed under miscellaneous head of estimate.

Finally tender was awarded to M/s Flora International for ₹ 1956672/.

**Some special conditions included in tender were:-**

1- Contractors having experience in transplantation of trees shall be preferred as work is special in nature. It is therefore requested to attach evidentiary proof regarding this.

2- In case after transplantation of tree, the plant/tree dies within maintenance period of three months 40% payment will not be made and a penalty of ₹ 1000/- per tree shall be recovered.

**Payment was scheduledin two stages –**

i- After transplantation 60% payment may be released.

ii- Balance 40% shall be released after maintenance period of three months after survival of trees.

The cost of transplantation along with three months maintenance is coming ₹ 9783.36 / per tree.

Process of transplantation includes following steps:-

i- Chopping of branches of trees so that their daily food requirement reduces resulting in requirement of less no. of roots

ii- Roots of half side are pruned and some medicines (to avoid septic conditions) and fertilisers are added. New roots come out.

iii- Step ii is repeated for other half side.

iv- Pit is excavated where tree is to be transplanted and prepared ready with fertilisers and medicines.

v- Tree is transported and transplanted with the help of crane, JCB etc and properly supported.

vi- Watering to be done sufficiently till plant stabilises.

By the above process almost all trees have been shifted along the boundary line of railway land. Survival depends upon how sensitively the transplantation is carried out.Its survival rate is under monitoring and final success shall be ascertained after completion of maintenance period of three months after transplantation as per agreement.

Some pictures from site are annexed for just feeling the process.

*Tree prepared for transplantation*

*Just after transplantation*

*Caring of transplanted trees*

*Caring of transplanted trees*

*Sucessfull transplantation : New leaves started coming*

# Innovations, Economy Measures and other Improvements at CPOH/ALD

By
S.K.Srivastava*

## 1.0 Unit Exchange of BCM(Screening Unit & Troughs) Created to Reduce POH Duration:

To improve quality of work and to reduce POH duration, Unit exchange of various main sub-assemblies/ components of track machines is essentially required. By creating unit exchange, quality repair of each released component can be done without any hassles in lean time and all sub-assemblies can be kept ready in advance before arrival of machine for one to one replacement, which will definitely lead to drastic reduction in POH duration. Since, several activities are done in parallel during POH, reduction in POH duration is possible only if unit exchange for all identified components is created.

Of late, a good number of BCMs are coming for POH. Hence, thrust area of CPOH isto develop unit exchange for BCM, which includes Screening unit, Troughs, Main & Turret Gear boxes and driving axle set with complete Bogieframe. ***Large and voluminous mechanical sub-assemblies like Screening unit, Ascending and Descending troughs were created in Dec'15 and have already been installed on BCM-371 of NR. Only these have effected saving of more than 15 days in POH duration.*** CPOH has also started the work for creation of unit exchange of Main & Turret Gear boxes by procuring necessary spares. Two Drivingaxle set with complete Bogieframe have also been proposed for procurement under capital spares at Railway Board's level. If exchange units of all aforesaid sub-assemblies including two Driving axle set with complete Bogieframe are created, there is likelihood of reducing POH duration of BCM by about a month.

## 2.0 Development of Modified Design of Tamping Unit for CSM & WST:

In its continued pursuit of indigenization and development, CPOH has achieved a milestone by developing a new variant of tamping unit for CSM/ WST machines with fusion of the best features of CSM & Tamping Express tamping units. This is a unique tamping unit having combination of split type Vibration shaft assembly & Arm assembly with facility of holding straight tools similar to Tamping Express tamping unit and remaining features of CSM tamping unit. Instead of centrally supported Vibration shaft assembly being used in CSM tamping units with more incidences of failures of vibration shaft and central bearing, four point support has now been given to the vibration shaft to ensure better stability and support to fast moving assemblies, which is expected to lead to trouble free service with ease of maintenance. This tamping unit will be put on trial and if found to give better performance, CPOH will propose to switch over to this type of tamping unit for CSM and WST machines, in future.

* Dy.CE/CPOH/ALD

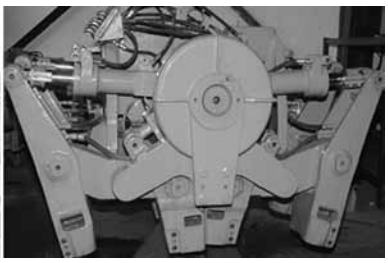

**3.0 Test Bench for Tamping Unit:** A new test bench with centralised control panel has been developed in-house by CPOH for testing of all types of tamping units on elevated platform. Power pack of this test bench has two electric driven motors of 50 BHP for operation of two hydralic double pumps provide on it. Actuation of valves for each hydraulic function is controlled through D.C.solonoids. Quick coupling provided for hose connection is extremly helpful in frequent connection and prevention of oil spillage. Re-chargeable electronic panel has been provided to ensure continuous oil pressure in Counter pressure circuit even during power failure. Connection of hydaulic hoses have been made throgh channels, which is aesthetically pleasing.

**4.0 Work benches for UNIMAT-4S Tamping Unit Fabricated from Released Materials:.**

Eight Workbenches have been fabricated for tamping unit of UNIMAT 4S from released M.S. angle/Channels and Guide rods. These benches will improve the system of working in Tamping unit section.

**5.0 Oil Bath Heater for Bearings, Flywheels and Gears:**

**Oil bath Heater for Bearings:** For heating of bearings at controlled temperature of 95°C, a new oil bath heater with auto cut system has been developed in-house by CPOH. Auto cut system will restrict the temperature at desired level to prevent any metallurgical changes in bearings during heating.This equipment will improve the system of assembly and will lead to enhanced service life of tamping units in field.

**Oil bath Heater for Flywheels and Gears:** For heating of flywheels and crown gears at controlled high temperature of 250°C, a new oil bath heater with auto cut system has been developed in-house by CPOH. Auto cut system will restrict the temperature at desired level to prevent any metallurgical changes in flywheels and crown gears during heating.This equipment will ensure proper assembly of tamping unit and axle components.

**6.0 Jet Control Cleaning Machine:**

A new spare part cleaning machinehaving a close chamber with motorised jet pressure arrangement and pressurised pneumatic air dryer has been developed in house by CPOH. All small parts of Tamping unit will be cleaned in it and air-dried before assembly.

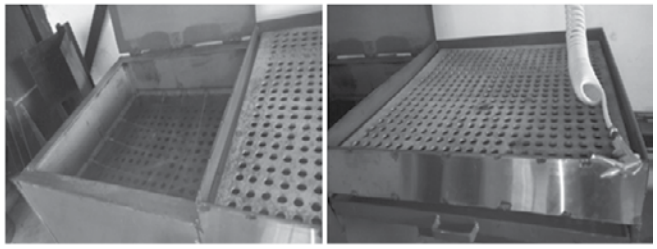

**7.0 Tools cum Work Benches:**

Two new Tools cum Work benches have been fabricated in houseand installed at Shop floor. This will improve the overhauling process and facilitate easy availability of long and heavy tools for assembly. Provision of pressurised pneumatic blow gun will be helpful in cleaning of small parts before use.

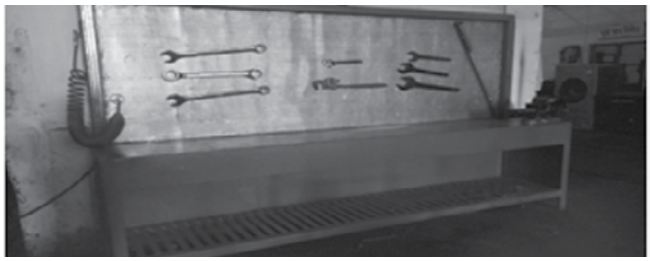

**8.0 Pneumatic Controlled Paint Booth for Spray Painting:**

The Paint Booth with elevated funnel type duct having exhaust fans for disposal of paint-fumes outside the Tamping unit shed beyond human contact area at about 15 feet height has been developed in-house by using released materials. This will reduce noxious suspension of paint particles in Tamping unit shed and provide comfortable working environment besides being aesthetically pleasing and eliminating deposition of paint on floor all around the open painting area, hitherto.

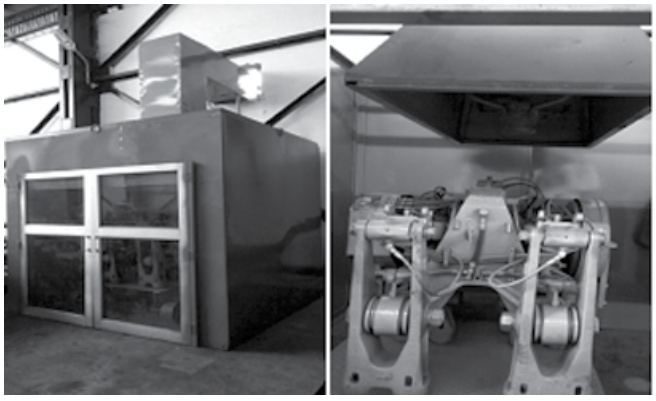

**9.0 Indigenisation of Wheel for LASER Trolley of Tamping Express :** LASER trolley of Tamping Express 3954 has been repaired in-house by providing four numbers indigenous 'Metlon wheels' at a total cost of only ₹ 19000/- against the imported cost of ₹ 273000/, there by affecting economy of ₹ 254000/-.

**10.0 Epoxy Flooring with PU top layer of Assembly line:**

Anti-skid Epoxy flooring with PU top layersimilar to the best industrial flooring standards in use in OEM premises, has been done in Oct'15 in the complete Assembly line portion of Tamping Unit Shed. This will result into a clean surrounding while assembling the tamping units and will definitely improve quality besides being aesthetically pleasing.

**11.0 Tamping Unit Hot Water Components Cleaning Tank:**

A new Tamping Unit Hot Water Components Cleaning tank has been developed in-house four heating elements and auto cut temperature control for effective cleaning including removal of oil, grease, blackish layer covering etc of released tamping units components/sub-assemblies at a temperature of 60°-70°. After disassembly of tamping units, all dismantled parts are being put in 600 ltr capacity hot water tank for 1-2 hours for separation of accumulated layer of impurities. This helps in getting clean components for further inspection and repair.

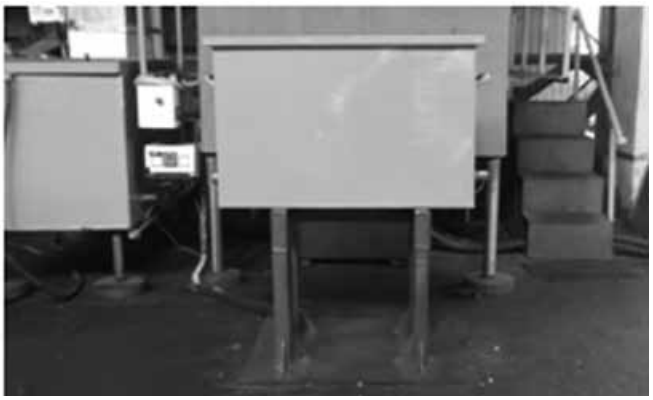

**12.0 Tamping Unit Mechanized Lifter-cum-Cart:** A new mechanized Lifter-cum-Cart for lifting and shifting tamping units out of Tamping unit shed and shop floors has been developed in-house by providing a hydraulic cylinder with a manual pump on a movable platform with V-shaped arms and having adequate space for keeping a trolley. This assembly can be easily carried in different sheds for shifting purpose and has been of immense help in properly stacking tamping units on an earmarked concrete apron outside the shed thereby decongesting and improving availability of space as well as cleanliness in Shed/Shop floors.

**13.0 Light shed with Steel tables and benches for taking lunch by staff:** A light shed has been fabricated from released pipes in-house and provided with Galvalum sheets. Steel tables and benches have also been fabricated in-house using unserviceable Guide rods, angles and plates for facilitating staff to take tea and lunch comfortably. Water cooler has also been provided. This also fulfils their long outstanding demand.

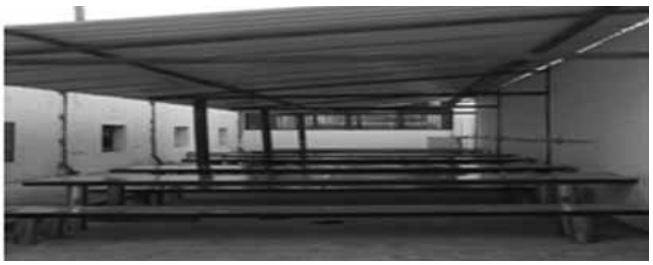

**14.0 Electronics Test room:** A new Electronics Test room equipped with testing facilities for Relay, Sensors, Limit/Proximity/Pressure switches etc. has been developed. In this test room, an Electronic test bench is also being developed in-house by using released Multi-check and Electronic panels of condemned CSM 901 of NR for testing of PCBs, Transducers, Encoders and other devices, which is likely to become operational early.

**15.0 Major Modification in VPR-17 of NWR:** VPR-02-17 machine of Kalugaputmash, Russia was inducted in the Railways during 2004. Ever since commissioning, the machine is having frequent failures of Electronics and Hydraulics assemblies/components. The services of the OEM's dealer have been grossly unsatisfactory with very long lead time in procurement of spares, which very badly increases the machine downtime in case of breakdown. After last POH in 2014, the machine hardly worked for 105km, when the Russian High Transmission gear box failed. No expertise for its repair is available at present and any unit exchange is also not available. The procurement of the same was expected to take a long time. In view of the problem of not having ready availability of spares and lack of expertise in repair of Russian assemblies, NWR requested to modify the machine by providing ZF gear box and the user friendly electrical panels. The modification works started in Oct'15 and completed in Mar'16.

**16.0 USFD testing of Wheels and Axles:** USFD testing of Wheel by 0° Normal probe and Axle by 0° & 17.5° NELA probes of all machines has been started to avoid any in-service failure of Wheels and Axles. Proper record keeping is also being done.

**17.0 Calibration of measuring instruments, gauges and multimeters:**During commissioning, all functional parameters are being calibrated as per rated tolerances given in machine drawings& catalogues. Null setting of all sensing units, transducers, pendulums and PCBs is being done on Zero parameter track. All 37 'Masters' have already been calibrated from NABL accredited source and in-house validation of 57 instruments / gauges / multimeters on various test benches done. A set of 6-9 Masters is being used on different track machines under commissioning for calibration of total about 74 parameters on all machines.

**18.0 Development of drawings for manufacture of spares:** CPOH has been developing drawings for fabrication of spares similar to components/parts being used on machine by reverse engineering as indigenous substitutes from reliable competitive sources of supply. About 251 drawings developed by CPOH in past have already been authenticated, approved and issued by RDSO. 198 such drawings are under authentication and approval of RDSO. More detailed drawings with isometric, 3D view and tables of parts details with various tolerances are also under development.

**19.0** Online Hydraulic Oil filtration and contamination monitoring Unit (CMU): During this month, an Online filtration with CMU system has been installed on MPT-2000 of NCR. This system is equipped with a pump-motor combination, filtering media and CMU. The CMU provides real time data of oil cleanliness level in ISO and NAS no. The circuit diagram of this system is as under:

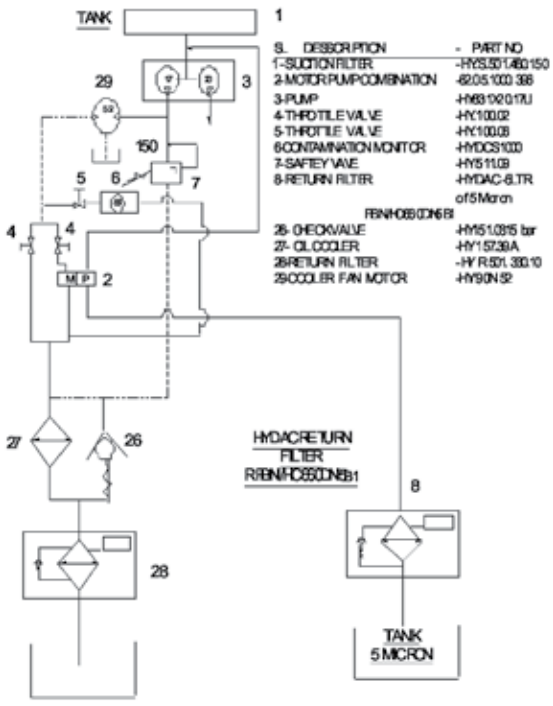


The system cleans hydraulic oil, both during running and working of the machine. This system will not only ensure trouble-free working of machine but will also improve efficiency and prevent premature failure of costly hydraulic pumps, motors and valves due to oil contamination.

**20.0 Human Resource Development:** To develop a large pool of reliable, trained and competent manpower daily start up instructions and necessary counseling are being given to all CPOH staff and periodic free of cost hands-on trainings as well as classroom trainings are also organized with active association of the OEMs. First such training was organized by M/s Cummins in Engines, M/s Plasser& M/s Rexroth in Hydraulic Pumps, Motors & Valves and M/s Hydac in Filtration from 1st to 5th Dec'15. M/s Plasser (India) has also been persuaded to impart training to CPOH staff for a week in a group of 4-5 persons at Faridabad. First such training was also organized from 15th to 19th Feb'16.These initiatives are certainly going to yield good results for up gradation of skill, development of expertise and dissemination of knowledge w.r.t. overhauling of assemblies.

■■■

### Railways to get rid of its Garbage in a Profitable Way!

Besides selling tickets on its trains, railways could soon be in the business of vending garbage piling in the platforms of its stations.

New Delhi: The proposal to sell garbage to a waste management group is part of its effort to determine revenue making opportunities other than passenger and freight fares by the Indian Railways.

"We are examining a proposal from a waste management group which has offered Rs 1.50 per kg for garbage to be collected at railway stations," said a senior railway official involved in exploring various avenues for generating non- tariff revenues.

A separate Non-fare Revenue Directorate has been created to explore revenue-making sources that could substitute its earnings from ticket sales and goods bookings.

The waste management group will clear away garbage from the stations 24/7. "Collection and disposal (of garbage) will be the company's responsibility. Waste thus collected could be used as manure or to generate power," the official said.

The proposal also puts the onus on the company to insure garbage collectors against risk and provide black plastic bags to carry away the solid waste from the stations.

The company has offered to clear garbage at 12 stations, including Amritsar, Ambala, Haridwar, Jammu, Katra, Dehradun, Moradabad, Saharanpur, CST, Mumbai Central and Dadar. Besides the spotless maintenance of the stations, garbage collection also brings in vital revenue to the railways' coffers, the official said.

A substantial amount of garbage, both biodegradable and non-degradable, is being generated at the stations by passengers, visitors, vendors and staff. The solid waste is currently being moved to the nearest designated municipal location, which requires considerable effort.

**Source: http://www.railnews.co.in**

# Reducing Blanket Layer Thickness by Using Geotextiles: A Review

By

Saurabh Singh*

R. P. Singh**

## 1.0 Introduction

Blanket layer works as a separation layer between the ballast and the subgrade layer and also provides a good bearing surface for the superstructure along with ballast. Now-a-days Blanket layer is provided in almost all new projects of new track construction and gauge conversion. RDSO has issued GE: G-0014 guidelines regarding the material to be used in the Blanket layer. In northern part ofthe country and many other locations the alluvial soil is predominantly available and its texture is sandy to silty loam or clay. This can be classified either as B-2 or C group based on which the required thickness of the sub-grade layer and blanket layer are suggested in RDSO Guidelines. Sometimes the proper material for Blanketing is not available at the site or it becomes very costly to transport the blanket material as per the required specifications. To overcome this challenge RDSO issued guidelines (RS/G/108/Heavy Axle Load dated 19.10.2015) regarding the reducing blanket layer thickness by providing layer of Geo-textile above the sub-grade.

The Pressure bulb beneath the superstructure of track changes considerably (Figure-1) resulting into the reduced stress transmitted to the subgrade layer when we are using geo-synthetics layer.

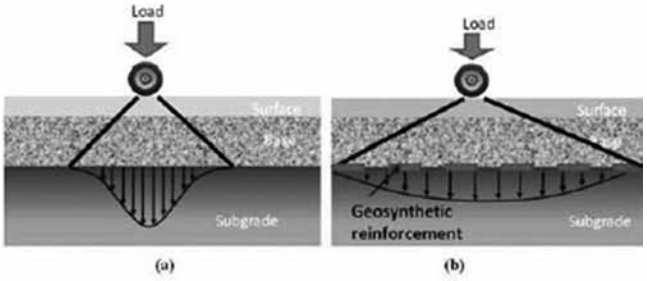


*Figure-1: Stress Distribution Pattern (a) without and (b) with Geo-textile (Zornberg 2012)*

The use of geo-synthetics has been started near about 1970s in American Railways and in 1980s they have started to prepare some guidelines based on the practical investigation of the tracks laid over geo-synthetics. The Canadian National Rail, Canadian Pacific Rail and National American Railway are considered pioneer in this field. In this paper a comparative review of the use of Geo-syntheticsin Indian Railways and World Railways is presented along with some recommendations and conclusions based on the best practices followed over world Railways.

### 1.1 Geosynthetics

Geosynthetic is defined as a planar product manufactured from a polymeric material and it is used with soil, rock, or other geotechnicalrelated material as an integral part of a civil engineering project, structure, or system. Most geo-synthetics are made from synthetic polymers of polypropylene, polyester, or polyethylene. Geo-synthetic products available today include, but are not limited to, geowebs, geogrids, geonets, geomeshes, geocomposites, and geotextiles. Geotextile is a permeable geosynthetic made of textile materials. Geotextile type is determined by the method used to combine the filaments or tapes into the planar structure. The geosynthetics is commercially available by following names :

a) Geotextiles

b) Geogrids

c) Geonets/Geospacers

d) Geomembranes

e) Geosynthetic clay liners

f) Geofoam

*IRSE (P) 2013
**Asst. Professor/ Track/ IRICEN

g) Geocells

h) Geocomposites

### 1.2 Applications of Geosynthetics

Geosynthetic applications are normally defined by the primary function of the following:

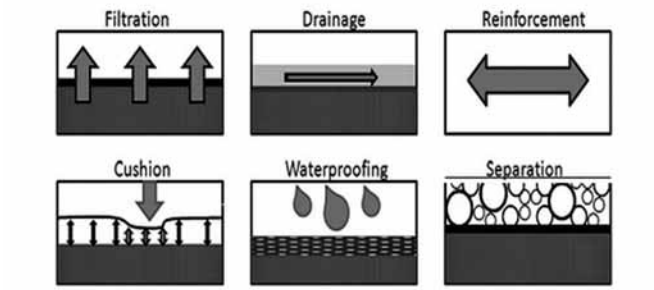


*Figure 2: Various functions of Geo-textiles (Source: Google)*

a) **Filtration:** Geosynthetics can be used as filters to prevent soils from migrating into the adjacent material and allowing water to flow through the system (e.g., the use of geotextile in trench drains, silt fence, etc.).

b) **Drainage:** Geotextiles or geocomposites can be used as drainage, or conduit, by allowing water to drain from or through low-permeability soils.

c) **Stress Dispersion:** Geotextiles is like a membrane and reduces the stress considerably (e.g. refer fig:1)

d) **Separation:** Geosynthetics can be used as a separator to separate the two dissimilar materials and prevent them from mixing, such as the use of geotextile between finegrained subgrade and granular base course below a roadway.

e) **Reinforcement:** Geogrids or geotextiles can be used as reinforcement to increase shear strength of soils, thereby providing a more competent structural material. Examples of this application include the use of geogrid to reinforce a steep slope, or to strengthen a base course in a pavement system.

f) **Erosion control:** Geosynthetics can be used to minimize the movement of soil particles due to flow of water. An example of this application is geotextile used between riprap and the stream bank to minimize erosion of soil below the riprap.

### 1.3 Primary advantages of geosynthetics are:

a) Relatively low cost.

b) Ease and convenience.

c) Fast and effective protection against erosion problems.

d) Many design methodologies are available for use.

e) Wide varieties of geosynthetic products are available to meet specific needs.

f) May be removed and reused if economically feasible.

## 2.0 Use of Geosynthetics in Indian Railways

At most of the track sections in Indian Railways for formation rehabilitation, geo-synthetics has been laid after consultation and suggestions of RDSO and almost everywhere it is laid with the help BCM (Ballast Cleaning Machine) during Deep Screening using some attachment (Figure 3)to lay the roll of Geo-synthetics on the track (i.e. between the ballast and the formation). There are some sections also where geo-grid is laid during BCM operation and at few of the locations, the Geo-synthetics and Geo-grid are laid in combination (Figure 4) as per the suggestions of RDSO.

*Figure 3 : Geo-textile roll attached to BCM*

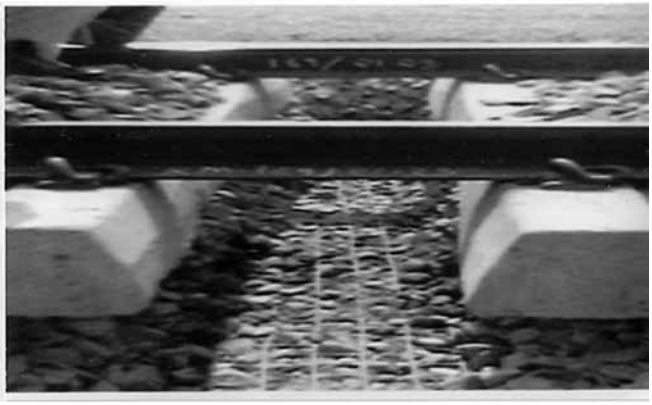

*Figure 4 : Geo-grid laid on the track*

*Figure 5 : Geo-grid roll attached to BCM*

There are very rare locations where Geo-synthetics were laid at the time of construction stage on the experimental and analysis basis. Some of the locations where Geo-synthetics have been laid are listed as below:

a) First time Geotextiles were tried in Sothern Railway (Madras - Gudur section, RDSO's report no.C-261, July, 83) for prevention of Mud pumping under ballast.

b) Geotextile were tried over 12 no. of different sites all over Indian Railways in 80's and a compilation report 'State of the Art – Use of Geotextile in Railways, Nov. 89 was prepared by RDSO giving recommended specification of geo-textile for track formation.

c) Geo-grid was tried in Cuttack – Paradeep section for track construction over soft soil and design of geo-grid reinforced embankment, retaining wall and on bridge approach in Jammu-Udhampur section, N .Rly (RDSO Report no. GE-13 &14, May.1997).

d) Biaxial geogrid has been used in South Central Railway, Northern Railway (Polypropylene – strength 30 kN/m with aperture size of 61mm x 61mm) for formation rehabilitation. Field observations on SCR & NR indicate improvement in overall track performance after the application of geogrid.

e) NF Railway has tried use of Geo-grid (Polyester based – knitted & coated with strength of 40 kN/m & aperture size of 25mmx25mm) in combination of geo-textile and sand layer for formation rehabilitation. The performance report of the trial section is satisfactory.

f) For low density routes, geotextile along with sand layer and brick soling has been used in Sitamarhi – Darbangha project, ECR.

### 2.1 Specifications & Properties of Geosynthetics

In order to obtain the required quality & strength of the Geo-synthetics, following properties/parameters of the Geo-synthetics, as prescribed in RDSO Draft Guidelines RDSO/2007/GE:G-0009, are checked in accordance with the prescribed IS Codes and ASTM Codes. The details of the properties and corresponding IS Codes are listed below:

#### 2.1.1 Specifications of Non-Woven Geo-textiles

| S. No. | Property | Test Method | Values |
|---|---|---|---|
| 1 | Polymer | Polypropylene/ High Density Polyethylene/polyamide, polyester or similar polymer | |
| 2 | Weight/Mass per unit area | IS: 14716 / ASTM D: 3776 | 300 g/m$^2$ (Minimum) |
| 3 | Thickness of Fabric at 2 kPa | ASTM 5199 | 2.0 mm (minimum) |
| 4 | Roll width | | 5.0 metre (minimum) |
| 5 | Roll Length | | 50 metre (minimum) |
| **Mechanical Properties** | | | |
| 1 | Elongation at break | IS: 13162/ ASTM D: 4595/ EN ISO: 10319 | 40 % to 70 % |
| 2 | Tensile Strength | IS: 13162/ ASTM D: 4595 / EN ISO: 10319 | 15 kN/m (minimum) |
| **Hydraulic Properties** | | | |
| 1 | Apparent opening size $O_{95}$ | IS: 14294 / ASTM D: 4751 / EN ISO: 12956 | 40 to 85 microns |
| 2 | Water Flow Rate Normal to the Plane | IS: 14324 / ASTM D: 4491 | 20 lit. /m$^2$/s (minimum) |

### 2.1.2 Specifications of Woven Geo-textiles

| S. No. | Property | Test Method | Values |
|---|---|---|---|
| 1 | Polymer | Polypropylene/ High Density Polyethylene/ polyamide/ polyester or similar polymer | |
| 2 | Mass per unit area | IS: 14716 / ASTM D: 3776 | 240 g/m$^2$ (Minimum) |
| 3 | Thickness at 2 kPa | ASTM: 5199 | 0.65 mm (minimum) |
| 4 | Roll width | | 5.0 metre (minimum) |
| 5 | Roll Length | | 50 m (minimum) |
| **Mechanical Properties** | | | |
| 1 | Tensile Strength | | |
| | Warp | IS: 1969/ ASTM D: 4595 EN ISO: 10319 | 40kN/m (Minimum) |
| 2 | Elongation at Maximum Load | | |
| | Warp | IS: 1969/ ASTM D: 4595/ EN ISO: 10319 | 15%-30 % |
| | Weft | | 15%-30 % |
| 3 | Puncture Strength | IS: 13162 / ASTM D: 4833 | 600 N (Minimum) |
| **Hydraulic Properties** | | | |
| 1 | Apparent opening size $O_{95}$ | IS: 14294 / ASTM D: 4751 EN ISO: 12956 | 425 microns (maximum) |
| 2 | Water Flow Rate Normal to the Plane | IS: 14324/ ASTM D: 4491 | 15 lit. /m$^2$/s (minimum) |

## 3.0 Use of Geo-synthetics in Foreign Railways

### 3.1 American Railways

### 3.1.1 Application Locations

a) The geotextile may be used beneath ballast and/ or sub-ballast for mainlines, secondary rail lines, high tonnage train lines, switches, crossings, bridge approaches, retarders, and etc., on both new track construction and existing track rehabilitation.

b) An engineering analysis of existing or proposed conditions, including subgrade classification using the "Unified Soil Classification" determines the requirement of geotextile. Table 1-10-1 of AREMA Volume-1(Part-10) manual assist in determining the geotextile to be used. Additional information regarding possible uses of geotextiles is available in other parts of this AREMA Volume-1(Part-10) manual.

### 3.1.2 Construction Details and Steps

a) In subgrade applications involving new construction, the subgrade areas shall be prepared to the proper lines and design grades.

b) When undercutting, plowing or sledding operations occur, the installation surface should be prepared assmoothly as possible and a minimum of 12 inches (305 mm) of aggregate shall be provided between thegeotextile and the bottom of the sleeper.

c) The geotextile should be unrolled as smoothly as possible on the prepared surface without wrinkles or folds. Construction traffic should not operate directly on the geotextile layer; there must be at least some minimum thickness of ballast to be laid before application of any type of traffic.

d) In all applications, the geotextile may be spliced by overlapping, thermally bonding or sewing. The minimum overlap distance in the transverse or longitudinal direction shall be 2 feet (0.6 meters). Some overlaps must be provided at the ends of rolls in direction of aggregate placement with previous roll on top. Thermally bonded or sewn seams may be allowed, if the overlap in the transverse or longitudinal directions is a minimum 6inches (150 mm). Also, if the thermally bonded or sewn seam grab tensile strength is greater than orequal to 80 % of the minimum average roll value unseamed grab tensile strength in the weaker principle direction.

e) With the approval of Engineer-in-charge, the contractor will be allowed to patch small rips or tears in the geotextile and it must be in accordance with the foregoing requirements. Damaged areas will be repaired by placing new geotextile over the area and extending beyond damaged area the same distance as required for overlaps.

f) The fill or aggregate should be placed on the geotextile in compacted lifts not less than 6 inches (150 mm) thick. In cases of track undercutting, a lift of ballast 6 inches (150 mm) thick should be placed on the geotextile, the track raised and additional ballast added before any ballast tamping operations begin.

### 3.2 Canadian Railways

#### 3.2.1 Recommended manufacturing specification

The main details of the manufacturing specification are as follows:

a) Mass - 1050 g/m$^2$ or greater for track rehabilitation without the use of capping sand.

b) Type - Needle punched nonwoven with 80 penetrations per cm$^2$ (80 p/cm$^2$) or greater.

c) Elongation - 60% or more to ASTM D-4632.

d) Fibre size - 0.7 tex or less.

e) Fibre strength - 0.4 newton per tex (N/tex) or greater.

f) Fibre polymer - Polyester.

g) Yarn length - 100 mm or greater.

h) Filtration opening size - 75 micrometres ($\mu$m) or less (CGSB 148.1).

i) In-plane coefficient of permeability - 50 micro metres per sec ($\mu$m/s) or greater.

j) Abrasion resistance - 1050 g/m$^2$ geotextile must withstand 200 kPa on 102 mm burstsample after 5000 revolutions of H-18 stones each loaded with 1000 grams of rotaryplatform double head abrasor (ASTM D-3884).

k) Fibre bonding by resin treatment or similar - not less than 5% nor more than 20% byweight of low modulus acrylic resin or other suitable non water soluble resin that leaves the geotextile pliable.

l) Seams - No longitudinal seams permitted.

m) Colour- Must not cause “Snow Blindnes” during installation.

n) Packaging - Must be weatherproofed and clearly identified at both ends stating manufacturer, width, length, type of geotextile, date of manufacture.

o) Wrapping - 0.2 mm thick black polyethylene or similar.

p) Width and length without seaming- To be specified by client.

#### 3.2.2 Recommendation regarding installation

The very important point to be remembered while installation of a geotextile is to ensure not less than 200 mm and preferably 300 mm of ballast below the base of the sleeper prior to first tamping.To ensure sufficient ballast depth sand bags filled with ballast can be used to keep the track in lifted position as shown in Fig. 6. It shows a track under rehabilitationthat is to be ballasted from a ballast train. It is also ensured that the edges of the laid geotextiles has been turned down to drain the water in the side catch drain and the ballast can be recouped in one go by a ballast train.

*Figure 6 : Typical track turnout rehabilitated with geo-textile and supported on sand bags filled with ballast about to receive new ballast. (Raymond, 1999)*

An undercut transition zone of about 3-6 meters length should be provided at both ends of the installed geotextile section where the track is undercut but not provided with a geotextile. As noted the edge of the geotextiles should be turned down towards side drains with inverts not less than 150 mm deeper than the undercut load bearingsurface. The side drains must be day-lighted by a pipe or otherwise to allow drainage to the side ditches or other drainage area. The installation of track geotextiles is presented in more detail by Raymond (1986a).

Rehabilitation, with or without geotextiles, should always involve good drainage practice. Such drainage provisions should include: (i) Internal drainage, (ii)

Ditch drainage and (iii) Ground water drainage. The Mechanism for track support particle migration during spring thaw of frozen support can be understood from Figure 7 below.

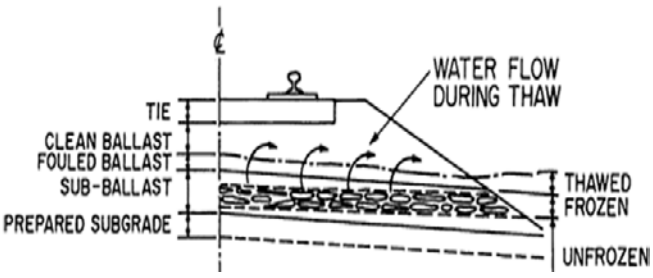


*Figure7: Mechanism for track support particle migration during spring thaw of frozen support.(Raymond, 1999)*

In a study conducted by Raymond in 1998, he accessed the sites where the resin coated geotextiles were laid before 4 years; he found that the geotextiles are in good condition and working properly. The excavated material was relatively dry and the grading curves have been shown in Figure 8. The figure shows the limits of the ballast samples obtained from above sites, including those that had been surface-fouled and compares actual grading limits provided at the time of installation with the present grading curves.The figure also presents the comparison of the material below the geotextile. The samples below the geotextile are compared with the 'Manual for Railway Engineering of the American Railway' sub-ballast limits.It is evident that the soil below the geotextile would be acceptable as a broadly graded sub-ballast material.

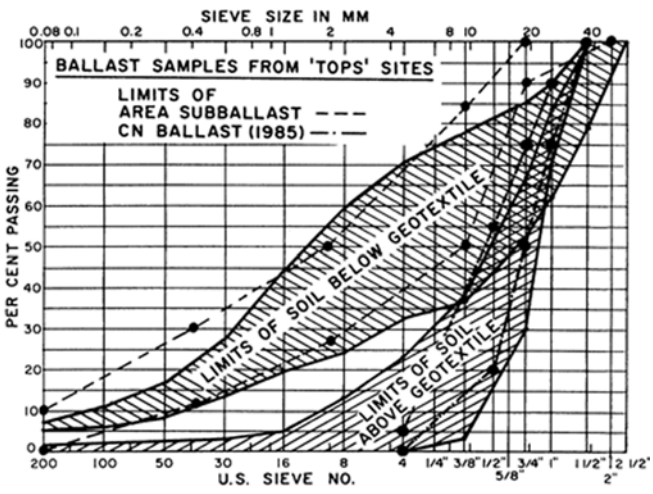


*Figure 8 : Summary of ballast grading curves from excavations at heel of some turnouts installed withgeotextiles on CN Rail's Atlantic region. SI particle size on top scale.(Raymond, 1999)*

Since a large number of Longitudinal and Lateral forces are produced at the location of turnout during the train movement, it is very crucial place and must be provided with the geotextile. The other main reasons for it can be (a) these turnouts all have joints at the turnout heel and tended to foul quite quickly (approximately four years, Raymond, 1986b), and (b) all sub-ballast samples had fines that were likely to be frost susceptible. In testing the fines using the standard Atterberg limits they tested non-plastic, however, when the particles passing the 75 $\mu$m sieve were tested in the liquid limit device values of up to 50 were recorded. These particles would make the material below the geotextile relatively impermeable, able to retain water, and frost susceptible.

### 3.3 UIC Recommendations for use of UBM

UBM give reliable performance over a long service life under any type of climatic conditions. UIC 719-1 has recommended the use of UBM (Under Ballast Mats) below the ballast layer just above the substructure as shown in Fig. 9 below.

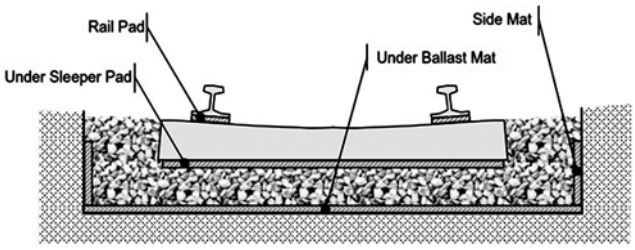


*Figure 9: Possible insertion level of rail pads, Under Sleeper Pads or Under Ballast Mats (UIC-719-1)*

**The important functions of the UBMs are listed as follows:**

a) UBM provides an additional elastic layer between the ballast and the subgrade which works for vibration and noise reduction.

b) The UBM layer also protects the ballast layer to be directly damaged by the subgrade reaction and rubbing.

c) The thickness of the ballast layer can be decreased slightly if we are going to provide the UBM.

d) UBM works well over hard rock & in tunnels and are less effective over soft soils of open lines.

### 3.4 Australian Railways

#### 3.4.1 Performance of a Ballasted Rail Track with and without Geosynthetics

Studies conducted by Rowe and Jones (2000), Ashpiz et al. (2002), Raymond (2002), and Indraratna and Salim (2003) proved that track performance can be improved by providing geosynthetics by reducing track degradation. To study the stress distribution and strain accumulation in various layers of the track substructure under repeated wheel loads, Indraratna and Nimbalkar (2010) conducted a field trial on a section of railway track in the town of Bulli. The main objective of this was to study the benefits of a geocomposite layer installed at the ballast-capping interface, and in addition, to examine the performance of moderately graded recycled ballast in comparison to the traditionally very uniform fresh ballast. The properties of the geocomposites are given in Table-1. The track was constructed between two turnouts at Bulli along the New South Coast. The total length of the instrumented track section was 60 m and provided with settlement pegs and displacement transducers. The overall track bed thickness was 450 mm including a ballast layer of 300 mm and a capping layer of 150 mm in thickness. The particle size, gradation, and other index properties of fresh ballast used at the Bulli site were in accordance with the technical specifications TS-3402 (Rail Infrastructure Corporation of NSW 2001a).

**Table-1 Properties of geocomposite used during Bulli field trial**

| Characteristics Geogrid | Unit | Data |
|---|---|---|
| Type | Biaxial | |
| Tensile strength at 2% strain | kN/m | 10.5 x 10.5 |
| Tensile strength at 5% strain | kN/m | 21 x 21 |
| Peak tensile strength | kN/m | 30 x 30 |
| Strain at break | % | 11 x 10 |
| Aperture size | Mm | 40 x 27 |
| Thickness | Mm | 2 |
| Mass per unit area | $g/m^2$ | 420 |
| **Geotextile** | | |
| Type | Nonwoven | |
| Thickness | Mm | 2 |
| Mass per unit area | $g/m^2$ | 140 |

As expected, the geocomposite reduces the lateral strains of fresh ballast significantly, thus minimizing the lateral spread of ballast thereby eliminating the need for additional layers of crib and shoulder ballast during maintenance. This study also proved that the inclusion of a geosynthetic layer at ballast-capping interface may also serve as an alternative method of increasing internal confining pressure. Another important finding of this study was that wheel imperfections such as wheel-flat can increase the vertical maximum cyclic stress significantly, causing further ballast degradation.

#### 3.4.2 Performance of a Ballasted Rail Track with different type of Geosynthetics

To evaluate the performance of different types of geosynthetics for improving the overall track stability under in situ conditions, as extensive study was undertaken by Indraratna and Nimbalkar (2010) on an instrumented track sections in Singleton, near the City of Newcastle.

The results of the Singleton study revealed that the effectiveness of geogrids is greater for relatively weak subgrades. The accumulated strains in the geogrids were influenced by the subgrade deformation, while the induced transient strains were mainly affected by the geogrid stiffness.

### 4.0 Conclusion

The track is a very important part of Railways and it requires very frequent maintenance and renewal (e.g. Deep Screening is to be carried out at 10 years interval). Experiences of use of Geo-textiles in world railways show that frequency of maintenance and renewal decreases when layer of geosynthetics is used between ballast and subgrade and a large expenditure on renewal could be curtailed. Based on the review of practices followed in world railways some of the conclusions are drawn and listed below:

a) Selection of proper geo-synthetics(woven or non woven) based on the requirement (like stress reduction, drainage issues in heavy rainfall area or prevention of fouling in mud pumping locations) is very important. The problem must be identified thoroughly before selection of type of geo-textiles. After seclection of type of geo-synthetic it must be properly tasted in the authorized labs before use.

b) The preferable depth for the installation of Geotextiles below the sleeper is 300 mm.The methodology of the installation to be determined at the time of tender/ contract. A sand layer above the geo-textile or geogrid in combination with geotextiles to be planned to avoids stress concentration due to angularity of ballast. In the area of heavy rainfall wide width of the geo-textile (nearly 4.5-5 metre) to be used so that it can properly drain the infiltrated water to the side drains.The side drains should be installed on both sides of the track with inverts 150mm below the load bearing surface.

c) In case of partial damage while laying small patch rips or tears in the geo-textile may be repaired in accordance with the foregoing requirements. Damaged areas will be repaired by placing new geo-textile over the area and extending beyond damaged area the same distance as required for overlaps.An undercut transition zone of about 3-6 metres length should be provided at both ends of the installed geotextile section where the track is undercut but not provided with a geotextile.

d) Properly laid geotextiles can reduce the ballast degradation and deep screening frequency of ballast can be increased (upto 20 years).The material in the sub-ballast layer provided between ballast and the geosynthetics must be non-plastic in nature.

**References**


1. AREMA, Manual for Railway Engineering Volume-1, 2010.

2. Ashpiz, E. S., Diederich, R., and Koslowski, C. (2002). The use of spunbound geotextile in railway track renewal on the St. Petersburg-Moscow line. Proc., 7th International Conference on Geosynthetics, Nice, France, 14-19.

3. Indraratna B. and Salim W. (2003). Deformation and degradation mechanics of recycled ballast- stabilised with geotextiles. Soils and Foundations 43(4), 35-46.

4. Indraratna, B., Nimbalkar, S., Christie, D., Vinod, J., The Performance of a Ballasted Rail Track with and without Geosynthetics, Journal of Geotechnical and Geo-environmental Enginerring, 907-917.

5. Indraratna, B., Nimbalkar, S. and Rujikiatkamjorn, C. (2013). Performance Assessment of Synthetic Shock Mats and Grids in the Improvement of Ballasted Tracks. Proc., 18thInternational Conference on Soil Mechanics and Geotechnical Engineering, Paris, 1283-1286.

6. Raymond, G. P. 1999. Railway rehabilitation geotextiles. Geotextiles and Geomembranes 17 (1999), 213-230.

7. RDSO Draft Guidelines, "RDSO/2007/GE:G-0009"

8. Rowe, P. K., and Jones, C. J. F. P. (2000). Geosynthetics: Innovative materials and rational design. Proc., GEOENG 2000, Melbourne, Australia, 1124-1156.

9. UIC Code – 719-1 (R), Recommendations for the use of Under Ballast Mats. UBM, International Union of Railways.

10. Zornberg, J. 2012. Geosynthetic - reinforced Pavement Systems. 5th European Geosynthetics Congress, Valencia.


■■■

**Railways to set up Automatic Coach Washing plants to save water**

New Delhi: With the specter of drought looming large over several parts of the country, Indian Railway has decided to set up automatic coach washing plants at 10 major depots to save water required for cleaning trains.

ACWP will be equipped with an effluent treatment system and water softening plant for recycling water used for cleaning trains and platforms. There are 23 railway depots out of which we will set up modern washing plants with added facilities for treatment of water for reuse at 10 at an estimated cost of Rs 20 crore, said a senior Railway Ministry official involved in execution of green initiatives of the national transporter.

According to the official, the National Green Tribunal has taken note of excessive extraction of ground water by railways for cleaning coaches and platforms. About 12,000 litres to 14,000 litres of water is being used for cleaning one rake consisting of 22-24 coaches.

Automatic washing plant is eco-friendly and uses minimum quantity of water, soap and disinfectants. Further, water used for washing can be treated at the ETP plant and recycled.

**Source: http://www.railnews.co.in**

## Details of Latest Correction Slips

| Sr-No | Codes/Manuals | Last Correction Slip no. |
|---|---|---|
| 1 | Indian Railways Permanent Way Manual(second Reprint-2004) | 139 of 08-02-2016 |
| 2 | Indian Railways Bridge Manual-1998 | 31 of 09-02-2015 |
| 3 | Indian Railways Works Manual-2000 | 10 of 17-2-2005 |
| 4 | Manual of Instructions on long Welded rails-2006(II reprint-2005) | 16 of 12-6-2014 |
| 5 | Manual for Flash Butt welding of Rails(reprint-2012) | 2 of 05-06-2014 |
| 6 | Manual for Fusion welding of rails by the Alumino Thermit Process (Revised 2012) | 2 of 30-06-2015 |
| 7 | Manual for Ultrasonic testing of rails & welds (revised 2012) | 03 of 04-03-2016 |
| 8 | Manual for Glued insulated rail joints-1998 | 5 of 28/8/2012 |
| 9 | Indian Railways Track Machine Manual (2005) | 17 of 21-02-2014 |
| 10 | Manual of Inspection schedules for officials of engg- Dept-2000 | Nil |
| 11 | Railways (opening for public Carriage of Passengers)Rules-2000 | Nil |
| 12 | Indian Railways Schedule of Dimensions 1676 gauge revised 2004 | 17 of 03-08-2015 |
| 13 | Indian Railways code for the engg dept (third Reprint-1999) | 49 of 25-08-2014 |
| 14 | Guidelines for Earthwork in Railway projects-2003 | 1 of 22-07-2004 |
| 15 | Indian Railways Small Track Machine Manual (2000) | 5 of 14-01-2015 |

# Talgo train trial run in Mathura-Palwal section

Mathura: Northern Railway will run the Spanish train Talgo at a maximum speed of up to 180 km per hour during the second phase trial on Saturday from Mathura station. The second phase trial will be held between Mathura and Palwal stations on July 9, said a senior Railway Ministry official. Earlier trial was carried out between Bareilly and Moradabad stations last month.

A team of Spanish officials along with railways officials and experts from Research Designs & Standards Organisation (RDSO) will be present onboard during the nine-coach Talgo train trial.Talgo coaches are lightweight and designed in a way that it can run on curves without decelerating the speed. "The trial will continue till July 26 and various aspects will be observed during the trial run," the official said.

After the successful launch of semi-high speed Gatimaan Express, Talgo trial is being conducted as part of railways strategy to increase the speed of trains. The nine-coach Talgo train consists of two Executive Class cars, four Chair Cars, a cafeteria, a power car and a tail-end coach for staff and equipment. Hauled by a 4,500 HP diesel engine, Talgo train ran at a speed ranging between 80-115 km per hour during the first trial.

The trial will be conducted with empty coaches and after filling those with sand bags. The testing team will be in the coaches during trials. Besides speed, testing team will also take note of vibration, safety and stability of lightweight coaches during the trial and these technical parametres were vital for high speed run. About the earlier trial results, the official said report is under preparation with analysis of various technical data.

However, he said though the preliminary report is okay there will also be a final trial between Mumbai-Delhi route before finalising the report. Shipped from Barcelona, the Talgo aluminium coaches anchored at Mumbai port on April 21. The Delhi-Mumbai Rajdhani Express runs at an average speed of 85 km per hour while the Talgo train can maintain an average speed of 125 km per hour. Talgo envisages the journey between Delhi and Mumbai can be completed in about 12 hours as compared to 17 hours at present. Besides reducing travel time, Talgo's lighter trains consume 30 per cent less energy.

The Railways has set up a Mobility Directorate to work on strategies to increase speed of trains.

**Source: http://www.railnews.co.in**

## A Study of Railway Wheel Profile Parameters Used as Indicators of an Increased Risk of Wheel Defects.

The capacity demands on railways will increase in the future, as will demands for a robust and available system. The availability of a railway system is dependent on the condition of its infrastructure and rolling stock. To inspect rolling stock so as to prevent damage to the track due to faulty wheels, infrastructure managers normally install wayside monitoring systems along the track. Such systems indicate, for example, wheels that fall outside the defined safety limits and have to be removed from service to prevent further damage to the track. Due to the nature of many wayside monitoring systems, which only monitor vehicles at defined points along the track, damage may be induced on the track prior to fault detection at the location of the system. Such damage can entail capacity-limiting speed reductions and manual track inspections before the track can be reopened for traffic. The number of wheel defects must therefore be kept to a minimum. In this paper, wheel profile parameters measured by a wayside wheel profile measurement system, installed along the Swedish Iron Ore Line, are examined and related to warning and alarm indications from a wheel defect detector installed on the same line. The study shows that an increased wheel wear, detectable by changes in the wheel profile parameters, could be used to reduce the risk of capacity-limiting wheel defect failure events and their reactive measures.

**By:Matthias Asplund, Mikale Palo, Stephen Famurewa and MattiRantatalo**

**Ref: Journal of Rail & Rapid Transit, Vol. 230, February 2016.**

## Determination of the Optimal Span Length to Minimize Resonance Effects in Bridges on High-Speed Lines.

This paper revisits the creation and cancellation of the dynamic resonance phenomenon that occurs in bridge structures on high-speed lines when crossed by wheel loads. The resonance and its cancellation are mathematically formulated for a Bernoulli-type beam with general boundary conditions and subjected to loads moving at a regular spacing. The resonance of the bridge caused by the travelling loads occurs, regardless of the mode shape, when the natural frequency of the structure coincides with the loading frequency produced by the loads moving at a constant speed. In this study, the dependency of the cancellation phenomenon on the mode shape is determined based on the boundary conditions of the structure. In addition, the optimal span length that suppresses the response at resonance is proposed using the cancellation phenomenon for a simple beam with pinned-pinned, clamped-clamped and clamped-pinned boundary conditions; and a simply supported continuous beam.

**By: Jeong-Rae Cho, Kiljejung, Keunhee Cho, Jong-Won Kwark, Young Jin Kim, &Byung-Suk Kim**

**Ref: Journal of Rail & Rapid Transit. Vol. 230, February 2016.**

## Optimisation of the Elastic Track Properties of Turnout Crossings.

Rail pads and under sleeper pads (USPs) are resilient elements inserted between the rail and the sleeper, and between the sleeper and the ballast, respectively. They improve the elastic properties of the track's superstructure. In this paper, the approach of estimating the performance of a turnout by using the dynamic forces acting on the crossing as indicators of the extent of crossing nose damage is improved by tuning the stiffness and damping of the rail pads and USPs using a numerical optimisation method. In the optimisation problem, the dynamic forces acting on rails, sleepers and the ballast bed, which should be minimised, are considered in the objective function. Constraints are imposed on the displacements of the structural elements of the turnout crossing. The combined multi-objective optimisation problem is solved using the multipoint approximation method. The results of the optimisation show that application of softer rail pads combined with USPs can significantly reduce the dynamic forces acting on the rails, sleepers and ballast. Moreover, the track elasticity should be varied along the crossing.

**By: Chang Wan, ValeriMarkine& Ivan Shevtso**

**Ref: Journal of Rail & Rapid Transit, Vol. 230, February 2016.**

## A Numerical Investigation on the Lateral Resistance of Frictional Sleepers in Ballasted Railway Tracks.

The lateral stability of ballasted railway tracks is a function of the lateral resistance of the sleepers created by interaction with ballast materials. Thus, one of the approaches for increasing the lateral resistance of sleepers has been to increase bottom friction and use frictional sleepers. A review of the technical literature showed that numerous experimental studies have been performed on this type of sleeper; however, no

numerical analysis has been conducted on its lateral resistance. Therefore, this paper developed a finite element numerical model for investigating frictional concrete sleepers. In this regard, a hardening elasto-plastic behavior model was developed for the ballast layer and ABAQUS software was used to numerically analyze the lateral resistance of this type of concrete sleeper. Using the developed model, some sensitivity analyses were performed on the parameters that affect the lateral resistance including the thickness and extent of the ballast shoulder, and the friction coefficient between the ballast layer and sleeper. The obtained results indicated that increasing the ballast shoulder from 25 to 40 cm resulted in about a 16–22% increase in lateral resistance, whereas increasing the friction coefficient from 0.1 to 0.8 led to about a 22–28% increase in the lateral resistance. On the other hand, on decreasing the ballast layer thickness from 30 to 20 cm, the lateral resistance increased by about 12–17%. In summary, it can be concluded that, compared with conventional concrete sleepers, frictional sleepers increased the lateral resistance by about 63–70%

**By: Jabbar Ali Zakeri, MortezaEsmaeili, Ahmad Kasraei&ArashBakhtiary.**

**Ref: Journal of Rail & Rapid Transit. Volume 230 February 2016.**

## Impact Analysis Due To Multiple Wheel Flats in Three-Dimensional Railway Vehicle-Track System Model and Development of a Smart Wheelset.

Wheel flats can create high-magnitude impact forces at the wheel/rail interface, these can induce high levels of local stress leading to fatigue damage, and failure of various vehicle and track components. With demands for increased load and speed levels, the issue of a strategy for effective maintenance and in-time replacement of defective wheel-flat-containing wheels has become an important concern for heavy haul operators. A comprehensive coupled vehicle/track model is generally used to predict the impact forces and the resulting component stresses in the presence of multiple flats. This paper considers the dynamic impact responses due to the presence of multiple flats. The characteristics of the bounce, pitch, and roll motions of the bogie due to a flat on a single wheel are investigated. The effect of multiple flats on the peak acceleration of a wheel is investigated for different sizes and relative positions of the flats, i.e. in-phase and out-of-phase conditions. This paper further presents the development of a smart wheelset for the detection of wheel flats for two different load conditions; it is based on a derived relationship between the peak wheel acceleration, vehicle speed and flat size.

**By: Rajib Ul Alam Uzzal, Waiz Ahmed & Rama.B.Bhat.**

**Ref: Journal of Rail & Rapid Transit, Vol. 230, February 2016.**

## Measurement of Vertical Geometry Variations in Railway Turnouts Exposed to Different Operating Conditions.

Turnouts are critical units in a railway system; they perform the switching procedure that allows trains to change between routes. Monitoring the track geometry of a turnout is necessary for maintenance planning and design optimisation. Monitoring is usually done by track recording cars, however, to isolate the ageing and dynamic behaviour of the track it is also necessary to study the unstressed track geometry of the turnouts. Such measurements can be used to develop degradation models to optimise maintenance and design, thereby increasing availability and reducing life cycle cost. This paper introduces a new method to measure the vertical position of the track geometry over time during non-operational conditions (unstressed) to show track degradation. The new method includes a smart system that uses relative measurement reference points to create a better accuracy and lower costs compared with fixed reference points. It evaluates various types of measurement equipment and uses levelling equipment to measure the unstressed vertical geometry of 13 turnouts located on Swedish railway lines, with three follow-up measurements over a year and a half. The turnouts were categorised into four groups: based on their accumulated capacity in million gross tonnes (MGT) and whether they were on a straight or curved main track. Surprisingly, the first three measurements showed the geometry of turnouts on the straight main track to have a vertical elevation tendency towards the mid-section, whereas the turnouts on the curved main track had a general vertical downwards bend tendency towards the mid-section. The results also showed that a higher capacity in MGT has a greater influence on track geometry changes over time.

**Ref: Journal of Rail & Rapid Transit, Vol. 230, February 2016.**

**By : Jens Jonsson, ImanArastehKhouy, Jan Lundberg, MattiRantatalo& Arne Nissen.**

## A Full-Scale Physical Model Test Apparatus for Investigating the Dynamic Performance of the Slab Track System of a High-Speed Railway.

This study involves the development of a full-scale physical model test apparatus to investigate the dynamic performance of the slab track system of a high-speed railway. A portion of a railway ballastless track with embankment and underlying soil strata was built inside a steel box (15 m long, 5 m wide and 6 m high). A sequential-load-generating system consisting of eight high-performance actuators was developed to apply a load that was equivalent to that generated by a train moving at speeds up to 360 km/h. Two loading conditions can be implemented in the tests, a stationary cyclic loading (using one actuator) or a simulated moving train loading (using all eight actuators). Three test cases were performed to demonstrate the capacity of the proposed test facility. The first case was to test the load-sharing ratio of fasteners beneath the rails to determine the load distribution on the track slab. A formula, based on the test results, was proposed to determine the transfer process of the loads between the train wheel and the rail fasteners. The second case was a stationary cyclic loading test, which applied loads with varying frequencies to the rails using a single actuator. The resonance frequency of the track/embankment/soil system was determined in these tests to be about 16 Hz, which coincided with theoretically computed results and field measurements. The final case was to simulate the dynamic excitation resulting from the passage of a train on the track at various speeds (up to 360 km/h). The test results on track vibrations in the physical model test showed reasonably good agreement with field measurements. These three test cases fully demonstrate the ability of the newly developed full-scale test facility to simulate dynamic excitation from trains and its ability to explore the dynamic performance of railway structures under train loadings.

**By: XuechengBian, Hongguang Jiang, Yunmin Chen, Jianqun Jiang &Jie Han.**

**Ref: Journal of Rail & Rapid Transit, Vol. 230, February 2016.**

## The Effect of the Frequency-Dependent Stiffness of Rail Pad on the Environment Vibrations Induced by Subway Train Running in Tunnel.

The influence of the frequency-dependent stiffness of rail pad on the frequency distribution of vibrations created by a subway train running in tunnel is investigated using a frequency-domain algorithm. The theoretical approach combines vehicle–track coupling dynamics and spectrum analysis using the finite element method. The proposed approach is validated by a comparison with measured data. The comparison further shows that the theoretical approach and the selection of calculation parameters are reasonable and they create high calculation accuracies in the considered frequency range. Compared with a constant stiffness pad, the frequency-dependent stiffness of rail pad has little effect on vibrations below the one-third octave center frequency of 25 Hz; however, it significantly changes the vibrations observed above that center frequency. It is also found that simply increasing the constant stiffness of rail pad can lead to predictions of the vibration that have only a small error in either the low-frequency or high-frequency domains.

**By : Kai Wei, Ping Wang, Fan Yang, and Junhua Xiao.**

**Ref: Journal of Rail & Rapid Transit, Vol. 230, March 2016.**

## Design And Evaluation of a Remote Measurement System for the Online Monitoring of Rail Vibration Sign:

The dynamic strain and vibration acceleration are two key parameters in the monitoring of vibrations that can damage track and affect the safety of railway traffic. This paper presents a remote measurement system for the online monitoring of train-induced vibration responses in rail tracks. A precision data acquisition node is designed for the conditioning and monitoring of the vibration signals generated by trains traveling at full speed. The monitored data is remotely acquired using a wireless sensor network. Furthermore, the use of solar power significantly increases the long-term service life of the system. The system is validated using both laboratory tests and a field deployment over a period of several months on an in-service high-speed railway. The obtained results indicate that the remote measurement system can accurately collect dynamic strain and vibration acceleration signals in a rail; these signals can be processed and analyzed to allow timely maintenance actions.

**By: Liu Chong, Wei Jiahong, Zhang Zhixin, Liang Junsheng, Ren Tongqun, and Xu Hongquan.**

**Ref: Journal of Rail & Rapid Transit, Vol. 230, March 2016.**

## Estimating the Total Risk for a Sun-Kink by Measuring Wave Propagation in the Track

A method to estimate the stress-free temperature in a rail by exciting the complete track has been theoretically investigated, by both simple beam theory and by a finite element model. For frequencies below a cut-off frequency, bending waves cannot propagate in the track. The cut-off frequency primarily depends on the stiffness of the lateral ballast. For a given ballast stiffness, the wavelength (or speed) of propagating waves depends on the axial stress in the rail. By first determining the cut-off frequency, the ballast stiffness can be determined. Then, the actual stress can be estimated by measuring the wave speed. By knowing the actual rail temperature, the stress-free temperature is then easily calculated. It is found that stress-free temperatures of 5 °C should cause measurable changes in the speed of wave propagation. It is determined that variations in damping of the ballast and stiffness of the pads in the rail clamps do not influence the results. Field measurements show that a track can be excited and propagating waves detected.

**Ref: Journal of Rail & Rapid Transit. Volume 230 March 2016.**

**by: Gunnar B Kjell.**

## Development Of A Probabilistic Buckling Analysis Scheme For Continuous Welded Rail Track.

Continuous welded rail (CWR) track has several advantages when compared with conventional jointed rail track. However, a thermally induced axial load can lead to the buckling of CWR tracks, which can result in train derailment. The buckling of CWR tracks is affected by several parameters, including the rail's neutral temperature, misalignment of the rails and ballast resistance. Most of these parameters can be considered as random variables. A deterministic analysis approach is generally used to predict the buckling of CWR tracks; however, it can provide conservative results since it is based on the worst-case scenario of these buckling parameters. This paper presents a probabilistic buckling analysis scheme for CWR tracks.

**By: Hyun-Ung Bae, Jin-Yu Choi, Jiho Moon, and Nam-Hyoung Lim.**

**Ref: Journal of Rail & Rapid Transit. Vol. 230, March 2016.**

## Finite Element Analysis of the Mechanical Behaviour of Insulated Rail Joints Due to Impact Loadings.

Insulated rail joints (IRJs) are safety-critical components in the signalling system of rail corridors. They are subjected to dynamic loads generated by heavy rolling-stock/track- system interactions and degrade faster than the other components of the rail track. Degraded IRJs diminish the reliability of the signalling system, thus posing a serious threat to the safety of rail operations. Therefore, there is a pressing need to closely examine the failure mechanisms of the end posts made of insulated material and inserted into the discontinuity in the rail at IRJs with a view to improving their service life, reliability and efficiency. Only a limited literature is available that examines different materials for IRJ end posts, and these primarily focus on contact pressure and contact stress distributions in the vicinity of the end post, disregarding the damage to the rail ends and end post materials. In this paper, a detailed three-dimensional finite element analysis procedure is carried out to quantify plastic deformation and material damage to the end post and railhead materials of IRJs due to a wheel load above that of the shakedown limit of rail steel. A modified Hertzian contact pressure distribution is considered in this simulation. A 5 mm thickness of an end post is considered at the discontinuity in the rail, which is required to form the six-bolt IRJ. Three popular IRJ end post materials are considered in this study: fibreglass, polyhexamethyleneadipamide, and polytetrafluoroethylene. A total of 2000 cycles of a 174 kN dynamic wheel load (in pressure format over the wheel/rail contact patch) are applied on the top of the rail's surface in the vicinity of the IRJ. Equivalent plastic deformations along with vertical and longitudinal plastic strains for unloaded conditions are presented. The strain plots depict damage of end post materials and ratchetting failure of rail ends. The ratchetting failure modes follow the established trend of decay in ratchetting rate in successive wheel load cycles. Comparisons of strain and stress on the railhead surface and in the railhead sub-surface considering all three different end post materials are put forward. Out of the three end post materials, fibreglass is the optimal material considering the ratchetting mode for the damage of the railhead material.

**By: Nirmal.K.Mandal.**

**Ref: Journal of Rail & Rapid Transit. Vol. 230, March 2016.**

## Flexural Behavior of High-Density Polyethylene Railroad Crossties.

Hardwood timber has been the predominant material of choice for crossties since the establishment of the railroad industry in the US. Recently, several concerns, including higher speeds, heavier loads, durability and negative environmental effects associated with deforestation and wood-treating chemicals, have invoked the railroad industry's interest in alternative materials for crossties. Currently, several manufacturers offer alternative and sustainable solutions using different recycled plastic composite materials. Thousands of plastic crossties are currently in service in a wide variety of railroad applications. Several researchers have been studying and testing these new materials, specifically high-density polyethylene, however, their behavior when subjected to rail loading is not yet fully understood. Uncertainties in mechanical properties, failure modes and fracture render their performance and safety questionable. More research is required to properly characterize, describe and model the behavior of these materials as well as to assess the feasibility of implementing these materials in railway applications in terms of performance, safety, practicality and economy. Therefore, this study aimed to investigate the performance of plastic composite crossties through experimental testing and analytical modeling. A flexural testing program addressing two AREMA recommended tests for crossties; center and rail seat bending, was conducted. The behavior of the crosstie with the rail and fastening system installed was also investigated. An analytical finite element model, capable of simulating the flexural behavior of plastic crossties, was constructed using a material model that was calibrated using the experimental data. The plastic composite crossties demonstrated adequate performance throughout the experimental testing program. This paper also highlights the potential structural, social and economic benefits of implementing high-density polyethylene crossties in railroad applications.

**By: Ibrahim Lotfy, MaenFarhat, Mohsen A Issa, and Mustafa Al-Obaidi.**

**Ref: Journal of Rail & Rapid Transit. Vol. 230, March 2016.**

## The Effects of Fastening Strength on the Variation in Stress-Free Temperature in a Welded Rail.

Continuous welded rail (CWR) is a fundamental component of any modern track structure and has several advantages over former types of rail joining processes. The reduction in maintenance and related costs has become the most attractive property of CWR although careful monitoring and maintenance of CWR is essential to ensure safe train operations. Management of the stress-free temperature (SFT) of any section of CWR in order to prevent rail breaks and lateral buckling that could lead to derailments is a vital duty of the track maintenance team. Variations in the SFT are influenced by a number of external factors. This paper describes experimental field and laboratory tests carried out to investigate to what extent the fastening strength influences the variation in SFT in CWR track on Fist fastenings and two types of pads. The research established a nonlinear relationship between clamping force and rail movement through the fasteners as well as a strongly linear relationship between clamping force and the variation in SFT. It is also demonstrated that although the friction coefficient of the pad has an influence on rail movement through the fastener, the primary factor influencing SFT variations is the clip force. This paper concludes by quantifying the relationship between clamping force and the expected variation in SFT with clear guidelines on the management of the SFT in CWR.

**By: Petrus J Gräbe and Dylan Jacobs.**

**Ref: Journal of Rail & Rapid Transit. Volume 230 March 2016.**

## An Investigation into the Vertical Dynamics of Tracks With Monoblock Sleepers With a 3D Finite-Element Model.

This paper investigates the vertical dynamic behavior of railway tracks with monoblock sleepers. Whole- and half-track finite element (FE) models are presented in which the rails and sleepers are represented with their nominal 3D geometry using solid elements. The railpad encompasses the rail seat area modeled as multiple spring–damper pairs. The 3D FE models are employed for three purposes. First, the stiffness and the damping of the railpad and ballast are derived by fitting the simulations to a set of field hammer test measurements. Second, the origins of six of the seven main characteristics are identified. Third, the influence of the rail pad representation on the track's dynamic response is studied. The results show that, in contrast to the 3D FE half-track model, the 3D FE whole-track model reproduces six of the seven main vertical track characteristics with a maximum deviation of 10% from

the measured frequencies. The seventh characteristic is reproduced at approximately the measured frequency when the frequency-dependent stiffness of the rail pad is considered. This model can be used to derive track parameters that will aid in the study of track degradation.

**Journal: Journal of Rail & Rapid Transit. Volume 230 March 2016.**

**Authors: MaiderOregui, Zili Li, and Rolf Dollevoet.**

## Methods for Quantifying Rail Seat Loads and a Review of Previous Experimentation.

A railroad sleeper and fastening system is composed of many unique parts that, when assembled, attempt to distribute train wheel loads through the system without damaging the components while providing a safe running surface and track geometry for trains to operate on. In order to evaluate the health of the sleeper and fastening system, there are many areas that need to be examined to ensure that key limit states are not exceeded. One key area of concern is the sleeper rail seat, specifically the load magnitude applied to this surface. There are many different metrics to evaluate the rail seat load, and this report will compare these to determine which should be used given different operating and infrastructure conditions. A sample calculation for each methodology was completed in order to compare how the methods differ, and to more fully understand the strengths and limitations of each methodology. These calculations were completed both with a static load and dynamic load, as the individual approaches account for dynamic loads in a variety of ways. For the purpose of this report, these calculations were completed assuming a concrete sleeper infrastructure. The goal of this paper is to provide an evaluation of the existing rail seat load calculation methodologies to improve current concrete sleeper and fastening system design standards through the application of mechanistic design principles.

**By: Brandon J Van Dyk, Andrew J Scheppe, J Riley Edwards, Marcus S Dersch, and Christopher PL Barkan.**

**Ref: Journal of Rail & Rapid Transit. Vol. 230, March 2016.**

## The Study of Post-Derailment Measures to Limit the Extent of a Derailment.

Preventing railway vehicles from derailing is an important issue for the rail industry. Also important is minimizing the outcome of a derailment by formulating post-derailment measures to limit the extent to which railway vehicles deviate from the track. In this paper, two kinds of post-derailment devices are designed and then validated using derailment experiments performed in the laboratory. The derailment experiments are performed on a derailment test bench designed by the Traction Power State Key Laboratory. To design the post-derailment devices, a half-car derailment test without any post-derailment device is conducted to understand the dynamic behaviour after a derailment. Then devices that can be mounted under the axle box to limit the lateral displacement of the vehicle during the derailment are designed on the basis of the observed dynamic behaviour. A theoretical analysis is used to derive the relationship between the mounting position and the initial conditions of the derailment. Finally, the two devices, which have different mounting positions, were verified in derailment experiments. The verification results indicate that a device with a reasonable mounting position can limit the lateral displacement of the vehicle and reduce the consequences of a derailment. Also, in order to avoid the fastener area, the distance between the device and the wheel needs to be larger than 180 mm.

**By: Xingwen Wu, Maoru Chi, Hao Gao, Dafu Zhang, Jing Zeng, Pingbo Wu, and Minhao Zhu.**

**Ref: Journal of Rail & Rapid Transit. Vol. 230, March 2016.**

## Experimental Investigation of the Production of Sleepers From Concrete that Contains Blast Furnace Slag.

Sleepers play an important role in determining the performance of rail tracks. The level of this importance can be gauged by noting the large number of sleepers that are located on railway tracks (1700 sleepers per kilometer of main line track). Reducing the life cycle costs of railway sleepers, as a result of decreasing construction, maintenance and operation costs, can have a significant economic effect on the cost of operating track. In this regard, the use of novel materials to construct high-strength sleepers is of considerable interest. Blast furnace slag, especially iron slag, can be crushed and used as an aggregate in the concrete used to produce sleepers. In the present study, slag and limestone sand was used to create a slag-containing concrete that was subsequently used to produce sleepers. The results of laboratory tests on slag-containing concrete showed a 46% increase in compressive strength compared with non-slag-

containing concrete. The ratio of tensile to compressive strengths of all the slag-containing concrete samples varied between 0.06 and 0.087, which is comparable to the range of 0.1 to 0.15 for non-slag-containing concrete. Negative moment tests performed on sleepers manufactured from slag-containing concrete required a 30% increase in the vertical load to initiate the first crack compared with a sleeper produced from non-slag-containing concrete. These preliminary results suggest that a new generation of high-strength sleepers can be created; the long-term efficiency of this type of sleeper will need to be confirmed by durability tests and practical use.

**By: Jabbar Ali Zakeri, MortezaEsmaeili, Seyed Ali Mosayebi, and OmidSayadi.**

**Ref: Rail & Rapid Transit. Vol. 230, March 2016.**

## Roadbed Bearing Capacity and Deformations in a Conventional and an Improved Turnout System.

Research is being performed on improving turnout systems; this is to increase the speed of trains on existing rail systems. In this note, a comparison between conventional and improved turnout systems is performed in terms of impact ratios estimated from dynamic wheel/load tests performed in the field. The track performance, roadbed bearing capacity, and deformations of conventional and improved turnout systems are examined. Numerical results show that the dynamic wheel load, roadbed stress and roadbed deformations for the improved turnout system are substantially smaller than those for the conventional turnout system.

**By: Sang-SooJeon.**

**Ref: Rail & Rapid Transit, Vol. 230, March 2016.**

## An Investigation of the Dynamic Behaviour of Track Transition Zones Using Discrete Element Modelling.

### Abstract

Previous investigations have shown that an abrupt stiffness change in track support is often associated with accelerated rates of deterioration of track geometry, high maintenance demand and poor ride quality. However, at present, there is no detailed understanding of the mechanisms of the deterioration of track geometry at transition zones. This paper aims to use the discrete element method to investigate transition zones from a micromechanical perspective. A simple track transition model with dimensions 2.1 m × 0.3 m × 0.45 m was simulated by using PFC$^{3D}$. In order to identify and evaluate appropriate mitigation methods, two kinds of transition patterns, including a single step change and a multi step-by-step change for subgrade stiffness distribution were tested. The influence of train direction, speed and axle load on the transition was also investigated. In addition, geogrid was used in the ballast layer to examine the effects of geogrid reinforcement. This paper provides insight into the factors that can cause or accelerate track degradation at the transition zones, in order to identify and evaluate appropriate mitigation design.

**By:Cheng Chen andGlenn R McDowell.**

**Ref: Rail & Rapid Transit. Vol. 230, March 2016.**

## Vibration Properties of Slab Track Installed on a Viaduct.

A model of the vibration behaviour of a discontinuous slab track installed on a viaduct is presented. It is represented by a three-layer Euler–Bernoulli beam model subjected to a harmonic load. Analytical equations are derived using the receptance method, and they are used to determine the vibration properties of the system. Comparisons are made between the vibration behaviour under various parameter conditions of the Chinese CRTS I slab track and a typical floating slab track installed on a viaduct. Attention is focused on the mobility, vibration isolation and track decay rates. The results show that, as expected, the floating slab track generates significantly lower viaduct vibrations than the CRTS I slab track. A slab track fitted with a relatively stiff rail pad and soft bearing layer is recommended for consideration during the engineering design phase; appropriate choices can lead to the optimization of the vibration isolation performance of a railway track on a viaduct, thus avoiding the creation of excessive rail vibrations. It is also shown that the average response of the viaduct gives a more representative assessment of the vibration isolation effect than if the average force transmitted to the viaduct is used. Moreover, in terms of insertion loss, these results are relatively insensitive to the choice of viaduct parameters.

**By: Feng Dai, David J Thompson, Ying Zhu, and Xueyi Liu.**

**Ref: Rail & Rapid Transit. Vol. 230, March 2016.**

## The Effect of Railway Vehicle Dynamics on the Lateral Alignment of Track.

Track geometry deteriorates with traffic flow, thus it needs to be regularly restored using tamping or other method. As the deterioration is mainly in the vertical direction this aspect has been widely studied and models for its analysis developed, however, the lateral deterioration of track is not as well understood. This research aims to develop a method that can be used to analyse and predict the lateral deterioration of railway track caused by traffic flows, and investigate the influences of different railway vehicles, running speeds, traffic types and wheel/rail contact conditions.

**By: Cencen Gong, Simon Iwnicki, and YannBezin.**

**Ref: Rail & Rapid Transit. Vol. 230, March 2016.**

## Impact Forces at Dipped Rail Joints.

Impact forces develop at the wheel/rail interface due to the presence of defects in the running surface of the wheel and/or the railhead. This paper reports on wheel impacts, caused by permanently dipped rail joints, that are characterised by high-frequency impact forces generated by high amplifications of the static load that occur for a very short duration ($P_1$ forces), followed by relatively low frequency, lower amplitude forces ($P_2$ forces) that occur for a longer duration. These impact forces are affected by the design of components adjacent to the wheel and rail, namely the bogie's primary suspension and rail seat pads; the influences of stiffness and damping characteristics of these components are investigated. A modified three-dimensional simulation model of the dynamics of the wagon/track system that includes defects in the track is created and is used to obtain the time series of the impact force. This is converted into impact force factors that are compared with a set of field-measured data reported in the literature. A simplified equation for the determination of impact force factors due to dipped rail joints is also proposed and validated.

**By: Nirmal K Mandal, ManickaDhanasekar, and Yan Quan Sun.**

**Ref: Rail & Rapid Transit. Vol. 230, March 2016.**

## Coupled Finite Element and Multibody System Dynamics Modeling of a Three-Dimensional Railroad System.

During the last two centuries, railroad vehicles have been an important means of transportation of both people and cargo, due to their economic and comfort advantages. Railroad vehicles are a highly economical means of transporting large quantities of cargo over long distances, and also provide a safe and comfortable means of passenger transport. Over the last 30 years or so, the finite element method (FEM) has become more widely used to model railroad systems including the rails, sleepers and substructure. Multibody system dynamics (MBS) software programs are used to model the contact between the wheels and the rails in an effort to study the contact forces and the general dynamics of railroad vehicles. Coupling both the FEM and MBS is a very useful technique to build a reliable model that includes the advantages of both methods. In this work, a full three-dimensional finite element model is created that uses beam, solid and spring elements to model the rails, fasteners, sleepers and substructure. The model treats the rails and the substructure as deformable bodies. Mode shapes of the finite element model are extracted for use in a MBS code to analyze the deformation of the track and substructure under dynamic loading conditions. The results of this new model agree well with results published in the literature.

**By: Ahmed I El-Ghandour, Martin B Hamper, and Craig D Foster.**

**Ref: Rail & Rapid Transit, Vol. 230, March 2016.**

## Effects of Steel Reinforcement Corrosion on Carbon-Fibre-Reinforced Polymer Repaired Slabs.

This paper presents the test results of reinforced-concrete (RC) slabs strengthened with carbon-fibre-reinforced polymer (CFRP) sheets and exposed to a corrosive environment. Nine slab specimens ($1500 \times 700 \times 100$ mm) were constructed and subjected to accelerated corrosion exposure. Test variables included the clear concrete cover (10, 25 and 40 mm), the longitudinal reinforcing bar diameter (8, 10 and 12 mm) and different degrees of corrosion. The corresponding current and concrete corrosion cracks were continually monitored throughout the corrosion process. A decrease in the clear concrete cover increased the corrosion crack width and the cracking time of slab specimens to levels higher than those resulting from an increase in the reinforcing bar diameter. All slab specimens were tested to failure in four-point bending, to investigate the load-carrying capacity and average crack spacing of each corroded slab specimen. In addition, some reinforcing bars were extracted, to determine the loss in the steel mass when

varying the clear concrete cover and the reinforcing bar diameter. The study reported in this paper thus establishes the effects of the clear concrete cover and the reinforcing bar diameter on corrosion activity in CFRP-strengthened RC slabs.

**By: Ning Zhuang, Haodong Sun, Yujue Zhou.**

**Ref: Journal of Structures and Buildings.**

## Compressive Behaviorof Gusset Plates Connected With Single-Angle Members.

Gusset plate connections with single-angle steel members are commonly used in power transmission towers. However, little research has been carried out with regard to the compressive behavior and design of gusset plates connected with single-angle members. Due to the complexity of the connections and load eccentricity, it is difficult to predict the compressive strength of the gusset plates. In this study, two full-scale experimental tests and a numerical parametric study were conducted to investigate the compressive behavior of such gusset plate connections. In the tests, the buckling failure mode and lateral-torsional deformation were observed. Finite-element (FE) models were then established and validated through comparison against the test results. In the parametric study, the effects of gusset plate thickness, unbraced length, distance to bending line, and load on the adjacent bracing member were examined. On the basis of the findings of this study and currently available design methods, two design methods were proposed for predicting the compressive strength of gusset plates connected with single-angle members. Good agreements were observed between the FE and design results in terms of the compressive strength and it was found that one method based on plate buckling gave a better prediction of the strength of gusset plates connected with single-angle members than the other based on effective column.

**By :Rui Cheng, Lei Xu, Sheng Jin & Yu Shi.**

**Ref: Journal of Structural Engineering.**

## Design of Bolted Side-Plated Reinforced-Concrete Beams with Partial Interaction.

Existing reinforced-concrete (RC) beams can be effectively strengthened by anchoring steel plates to the side faces of the beams using bolts, which is known as the bolted side-plating (BSP) technique. Previous studies have found that the performance of BSP beams is primarily controlled by the degree of partial interaction at the steel–RC interface, which can be conveniently quantified by the strain and curvature factors. In this paper, a new simplified flexural design procedure for BSP beams taking into account partial interaction is presented. Some optimum ranges of strain and curvature factors are first introduced to the flexural design of BSP beams. By ensuring the flexural capacity of a BSP beam is higher than the design moment, the preliminary size of steel plates and the arrangement of bolts can be determined. Following this, the maximum design slips and minimum design strain and curvature factors are calculated and back-checked to ensure the target flexural capacity of the BSP beam has been achieved. An example is presented to illustrate the effectiveness of the optimised design method for BSP beams, considering the effect of partial interaction under realistic loading conditions.

**By: Ling-Zhi Li, Chang-Jiu Jiang, Ray Kai-Leung Su, Sai-Huen Lo.**

**Ref: Structures and Buildings, Vol 169**

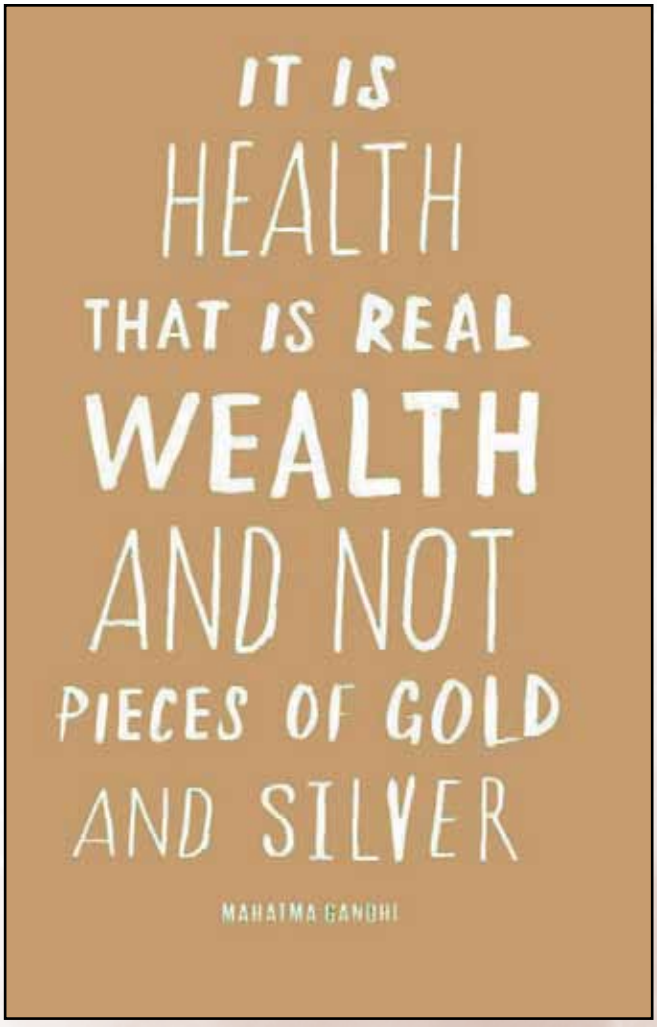

| CALENDAR OF COURSES 2016 ( Rev. 08) | | | | | |
|---|---|---|---|---|---|
| **Course No.** | **From** | **To** | **Name of the course** | **Duration** | **Eligible Group** |
| **PROBATIONARY COURSES** | | | | | |
| 16005 | 13-06-16 | 24-06-16 | IRSE M.Tech, Sem-I | 2 weeks | IRSE 2014 Exam. |
| 16006 | 30-05-16 | 03-06-16 | Orientation | 1 week | IRSE (P) 2013 Exam. |
| 16007 | 22-08-16 | 21-10-16 | IRSE Ph.II (Gr.P) | 9 weeks | IRSE (P) 2014 Exam. |
| 16008 | 17-10-16 | 21-10-16 | IRSE Posting Exam | 1 week | IRSE (P) 2013 Exam. |
| 16009 | 07-11-16 | 06-01-17 | IRSE Ph.II (Gr.Q) | 9 weeks | IRSE (P) 2014 Exam. |
| 16010 | 12-12-16 | 16-12-16 | IRSE Joining | 1 week | IRSE (P) 2015 Exam |
| 17001 | 09-01-17 | 20-01-17 | IRSE M.Tech, Sem-II | 2 weeks | IRSE 2014 Exam. |
| **INTEGRATED COURSES** | | | | | |
| 16103 | 06-09-16 | 01-12-16 | Integrated | 12 weeks | Gr.B officers |
| 16104 | 19-12-16 | 09-03-17 | Integrated | 12 weeks | Gr.B officers |
| **SR. PROFESSIONAL COURSES** | | | | | |
| 16203 | 18-07-16 | 19-08-16 | Sr.Prof(P.Way) | 5 weeks | JAG/SS officers with minimum 6 years of Service in Gr.'A' |
| 16204 | 12-12-16 | 13-01-17 | Sr.Prof( Br &General) | 5 weeks | JAG/SS officers with minimum 6 years of Service in Gr.'A' |
| **PCE/HAG/SAG/SEMINARS/WORKSHOPS/MEETINGS** | | | | | |
| 16304 | 21-07-16 | 22-07-16 | CE(W)/CPDEs' Seminar | 2 days | CE(Works)/CPDEs |
| 16305 | 18-08-16 | 19-08-16 | CAOs' Seminar | 2 days | CAOs |
| 16306 | 22-09-16 | 23-09-16 | Trg Mgr/CGE Seminar | 2 days | CGEs/Pr.CETCs |
| 16307 | 06-10-16 | 07-10-16 | CBEs' Seminar | 2 days | CBEs |
| 16308 | 10-11-16 | 11-11-16 | IRICEN Day Seminar | 2 days | IRSE 90' Batch |
| 16309 | 01-12-16 | 02-12-16 | PCEs' Seminar | 2 days | PCEs |
| **SPECIAL COURSES (TRACK/BRIDGES/WORKS)** | | | | | |
| 16413 | 11-07-16 | 22-07-16 | Contract, Arbitration and Project Management (W-2) | 2 weeks | SS/JAG |
| 16416 | 04-07-16 | 08-07-16 | Land Management (W-1) | 1 week | SS/JAG |
| 16417 | 04-07-16 | 15-07-16 | Construction Engineers (C-2) | 2 weeks | JS/SS/JAG of Construction Organization |
| 16419 | 25-07-16 | 29-07-16 | Arbitration for Arbitator (W-3) | 1week | JAG/SAG |
| 16420 | 25-07-16 | 02-08-16 | PSC (B-2) | 9 Days | JS/SS/JAG |
| 16421 | 01-08-16 | 05-08-16 | Modern Surveying (C-1) | 1week | JS/SS/JAG of Construction Organization |
| 16422 | 01-08-16 | 05-08-16 | Points & Crossings and Yards (T-3) | 1 week | JS/SS/JAG |
| 16423 | 08-08-16 | 13-08-16 | Rail Wheel Interaction & derailments (T-2) | 6 Days | JS/SS/JAG of Open Line |
| 16424 | 08-08-16 | 12-08-16 | TMS (T-5) | 1 week | JS/SS/JAG |
| 16425 | 22-08-16 | 09-09-16 | Bridge Design Asstt (B-1) | 3 Weeks | ABEs/DESIGN ASST |
| 16426 | 06-09-16 | 16-09-16 | Construction Engineers (C-2) | 2 weeks | SS/JAG |

Table Contd...

| Course No. | From | To | Name of the course | Duration | Eligible Group |
|---|---|---|---|---|---|
| 16427 | 05-12-16 | 09-12-16 | Modern Surveying (C-1) | 1 week | JS/SS/JAG of Construction Organization |
| 16428 | 03-10-16 | 07-10-16 | Arbitration for Arbitator (W-3) | 1 week | JAG/SAG |
| 16429 | 10-10-16 | 21-10-16 | Mechanized Track Maint., Renewal,Rail Grinding, USFD & Track Monitoring, (T-1) | 2 weeks | JS/SS/JAG |
| 16430 | 17-10-16 | 25-10-16 | Steel Structure (B-3) | 9 Days | JS/SS/JAG |
| 16431 | 15-11-16 | 18-11-16 | Points & Crossings and Yards (T-3) | 1 week | JS/SS/JAG |
| 16432 | 15-11-16 | 25-11-16 | Contract, Arbitration and Project Management (W-2) | 2 weeks | SS/JAG |
| 16433 | 21-11-16 | 25-11-16 | TMS (T-5) | 1 week | JS/SS/JAG |
| 16434 | 05-12-16 | 09-12-16 | Arbitration for Arbitator (W-3) | 1week | JAG/SAG |
| 16435 | 05-12-16 | 09-12-16 | Special course for NTPC Engineers (NTPC) | 1 week | NTPC Engineers |
| 16436 | 26-09-16 | 07-10-16 | Contract, Arbitration and Project Management (W-2) | 2 weeks | SS/JAG |
| **AWARENESS COURSES** | | | | | |
| 16701 | 11-07-16 | 15-07-16 | Awareness course | 1 week | IRSEE Prob. 2014 |
| 16702 | 16-08-16 | 19-08-16 | Awareness course | 1 week | IRPS Prob. 2014 |
| 16708 | 18-07-16 | 22-07-16 | Awareness course | 1 week | IRSSE Prob. 2014 |
| **IRICEN SSTW(SR.SUPERVISORS TRAINING WING) COURSES** | | | | | |
| 16709 | 19-09-16 | 23-09-16 | Awareness course | 1 week | IRSME Prob. 2014 |
| 16710 | 06-09-16 | 09-09-16 | Awareness course | 1 week | IRSS Prob. 2014 |
| 16711 | 19-12-16 | 23-12-16 | Awareness course | 1 week | IRSSE Prob. 2014 |
| 16712 | 26-12-16 | 30-12-16 | Awareness course | 1 week | IRSME Prob. 2014 |
| 16852 | 04-07-16 | 14-07-16 | USFD,Welding & Rail Grinding (USFD) | 2 weeks | SSEs/P.Way |
| 16853 | 04-07-16 | 08-07-16 | Points, Xings & curves (PXC) | 1 week | SSEs/P.Way |
| 16854 | 11-07-16 | 21-07-16 | Rail Wheel Interaction & derailments (RWI) | 2 weeks | SSEs & Instructor of ZRTI/ DTC/P.Way |
| 16855 | 18-07-16 | 22-07-16 | Track Monitoring (TMo) | 1 week | SSEs/P.Way |
| 16856 | 18-07-16 | 28-07-16 | Mech.Track Maintenance & Renewals (TM ) | 2 weeks | SSEs/P.Way |
| 16857 | 25-07-16 | 29-07-16 | Long Welded Rail (LWR) | 1 week | SSEs/P.Way |
| 16858 | 25-07-16 | 29-07-16 | Contract Management (CM) | 1 week | SSEs |
| 16859 | 01-08-16 | 05-08-16 | Insp.& Maint. of Bridges (BR) | 1 week | SSEs/Br |
| 16860 | 01-08-16 | 18-08-16 | Training of Trainers (P.Way) TOT(P. Way) | 3 weeks | SSEs/P.Way |
| 16861 | 01-08-16 | 05-08-16 | Land Management (LM) | 1 week | SSEs/Works |
| 16862 | 08-08-16 | 12-08-16 | Management of Store & Land (MLS) | 1 week | SSEs/P.Way |
| 16863 | 08-08-16 | 16-08-16 | Fabrication of Steel Bridges (FSB) | 9 Days | SSEs/Bridges |
| 16864 | 16-08-16 | 25-08-16 | Rail Wheel Interaction & derailments (RWI) | 2 week | SSEs/P.Way |
| 16865 | 22-08-16 | 26-08-16 | Long Welded Rail (LWR) | 1week | SSEs/P.Way |

Table Contd...

| Course No. | From | To | Name of the course | Duration | Eligible Group |
|---|---|---|---|---|---|
| 16866 | 22-08-16 | 31-08-16 | Points, Xings & curves (PXC) | 10 Days | SSEs/P.Way |
| 16867 | 29-08-16 | 02-09-16 | Concrete Technology (CNCT) | 1 week | SSE/Works of Const. Dept. |
| 16868 | 06-09-16 | 09-09-16 | Building Construction (BC) | 1 week | SSEs/Works |
| 16869 | 06-09-16 | 15-09-16 | USFD,Welding & Rail Grinding (USFD) | 2 weeks | SSEs/P.Way |
| 16870 | 29-08-16 | 01-09-16 | TMS | 1 week | SSEs |
| 16871 | 06-09-16 | 16-09-16 | Mech.Track Maintenance & Renewals (TM ) | 2 weeks | SSEs/P.Way |
| 16872 | 13-09-16 | 16-09-16 | Long Welded Rail (LWR) | 1 week | SSEs/P.Way |
| 16873 | 19-09-16 | 23-09-16 | Survey (SRVY) | 1 week | SSE/Works of Const. Dept. |
| 16874 | 19-09-16 | 27-09-16 | PSC Construction (PSCC) | 9 Days | SSEs/Bridges |
| 16875 | 19-09-16 | 22-09-16 | Formation (FMN) | 1 week | SSE/Works of Const. Dept. |
| 16876 | 26-09-16 | 30-09-16 | Points, Xings & curves (PXC) | 1 week | SSEs/P.Way |
| 16877 | 26-09-16 | 06-10-16 | Rail Wheel Interaction & derailments (RWI) | 2 weeks | SSEs & Instructor of ZRTI/ DTC/P.Way |
| 16878 | 26-09-16 | 30-09-16 | Management of Store & Land (MLS) | 1 week | SSEs/P.Way |
| 16879 | 10-10-16 | 14-10-16 | Track Monitoring (TMo) | 1 week | SSEs/P.Way |
| 16880 | 28-11-16 | 02-12-16 | Land Management (LM) | 1 week | SSEs/Works |
| 16881 | 03-10-16 | 07-10-16 | Building Construction (BC) | 1 week | SSEs/Works |
| 16882 | 28-11-16 | 02-12-16 | Contract Management (CM) | 1 week | SSEs |
| 16883 | 10-10-16 | 14-10-16 | Concrete Technology (CNCT) | 1 week | SSE/Works of Const. Dept. |
| 16884 | 21-11-16 | 24-11-16 | Formation (FMN) | 1 week | SSE/Works of Const. Dept. |
| 16885 | 17-10-16 | 21-10-16 | Insp.& Maint. of Bridges (BR) | 1 week | SSEs/Br |
| 16886 | 15-11-16 | 25-11-16 | Rail Wheel Interaction & derailments (RWI) | 2 weeks | SSEs & Instructor of ZRTI/ DTC/P.Way |
| 16887 | 15-11-16 | 18-11-16 | Long Welded Rail (LWR) | 1 week | SSEs/P.Way |
| 16888 | 15-11-16 | 24-11-16 | USFD,Welding & Rail Grinding (USFD) | 2 weeks | SSEs/P.Way |
| 16889 | 10-10-16 | 20-10-16 | Mech.Track Maintenance & Renewals (TM ) | 2 weeks | SSEs/P.Way |
| 16890 | 28-11-16 | 07-12-16 | Points, Xings & curves (PXC) | 10 Days | SSEs/P.Way |
| 16891 | 05-12-16 | 08-12-16 | TMS | 1 week | SSEs |
| 16892 | 05-12-16 | 09-12-16 | Long Welded Rail (LWR) | 1 week | SSEs/P.Way |
| 16893 | 12-12-16 | 16-12-16 | Track Monitoring (TMo) | 1 week | SSEs/P.Way |
| 16894 | 12-12-16 | 20-12-16 | Fabrication of Steel Bridges (FSB) | 9 Days | SSEs/Bridges |
| 16895 | 12-12-16 | 23-12-16 | Rail Wheel Interaction & derailments (RWI) | 2 weeks | SSEs & Instructor of ZRTI/ DTC/P.Way |
| 16896 | 19-12-16 | 30-12-16 | Mech.Track Maintenance & Renewals (TM ) | 2 weeks | SSEs/P.Way |
| 16897 | 19-12-16 | 29-12-16 | USFD,Welding & Rail Grinding (USFD) | 2 weeks | SSEs/P.Way |
| 16898 | 26-12-16 | 30-12-16 | Formation (FMN) | 1 week | SSE/Works of Const. Dept. |

# बिक्री हेतु उपलब्ध इरिसेन तकनीकी पुस्तकें (IRICEN TECHNICAL BOOKS AVAILABLE FOR SALE)

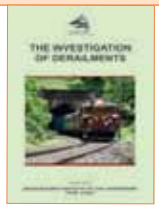


The Investigation of Derailments

Rs. 130/-

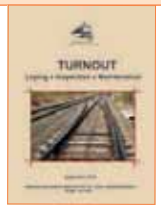


Turnout

Rs. 80/-

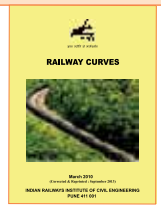


RAILWAYS CURVES

Rs. 80/-

Track Monitoring

Rs. 70/-

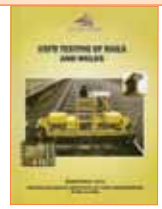

USFD Testing of Rails and Welds

Rs. 90/-

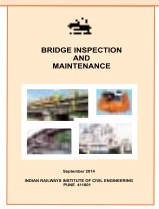


Bridge Inspection & Maintenance

Rs. 80/-

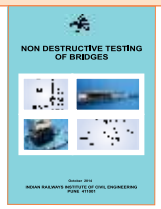


Non Destructive Testing of Bridges

Rs. 80/-

Concrete Technology

Rs. 60/-

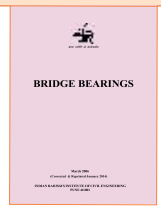


Bridge Bearings

Rs. 60/-

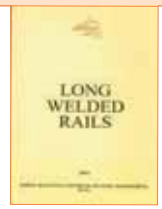


Long Welded Rails

Rs. 50/-

Layout Calculations

Rs. 120/-

Welding Techniques

Rs. 50/-

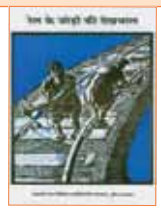

रेल के जोड़ों की देखभाल

Rs. 10/-

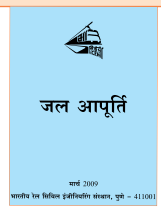


जल आपूर्ति

Rs. 20/-

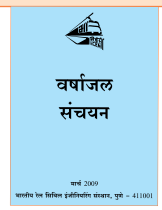


वर्षाजल संचयन

Rs. 20/-

Handbook of Material Testing

Rs. 50/-

River Training & Protection works for Railway Bridges

Rs. 50/-

Rail Steel

Rs. 25/-

Inspection, Assessment, Repairs & Retrofitting Of Masonry Arch Bridges

Rs. 50/-

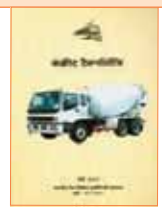

कंक्रीट टैक्नॉलॉजि

Rs. 50/-

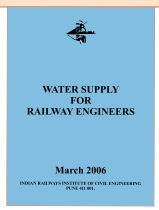


Water Supply For Railway Engineers

Rs. 25/-

Alumino-Thermic Welding

Rs. 10/-

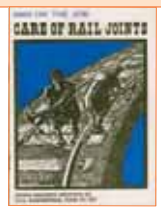


Man on the Job - Care of Rail Joints

Rs. 5/-

Handbook for Track Maintenance

Rs. 500

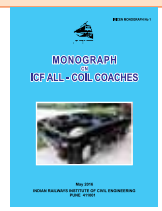


Monograph on ICF All - Coil Coaches

Rs. 60

**Copies of IRICEN books can be obtained from the librarian of IRICEN against cash payment. Demand Drafts drawn in favour of "Sr. Divisional Finance Manager, Central Railway, Pune " are also accepted. If these are requested to be mailed, add suitable postal charges.**

# INDIAN RAILWAYS INSTITUTE OF CIVIL ENGINEERING, PUNE - 411001

## CALENDER OF COURSES 2016 CHART (Rev. 08)

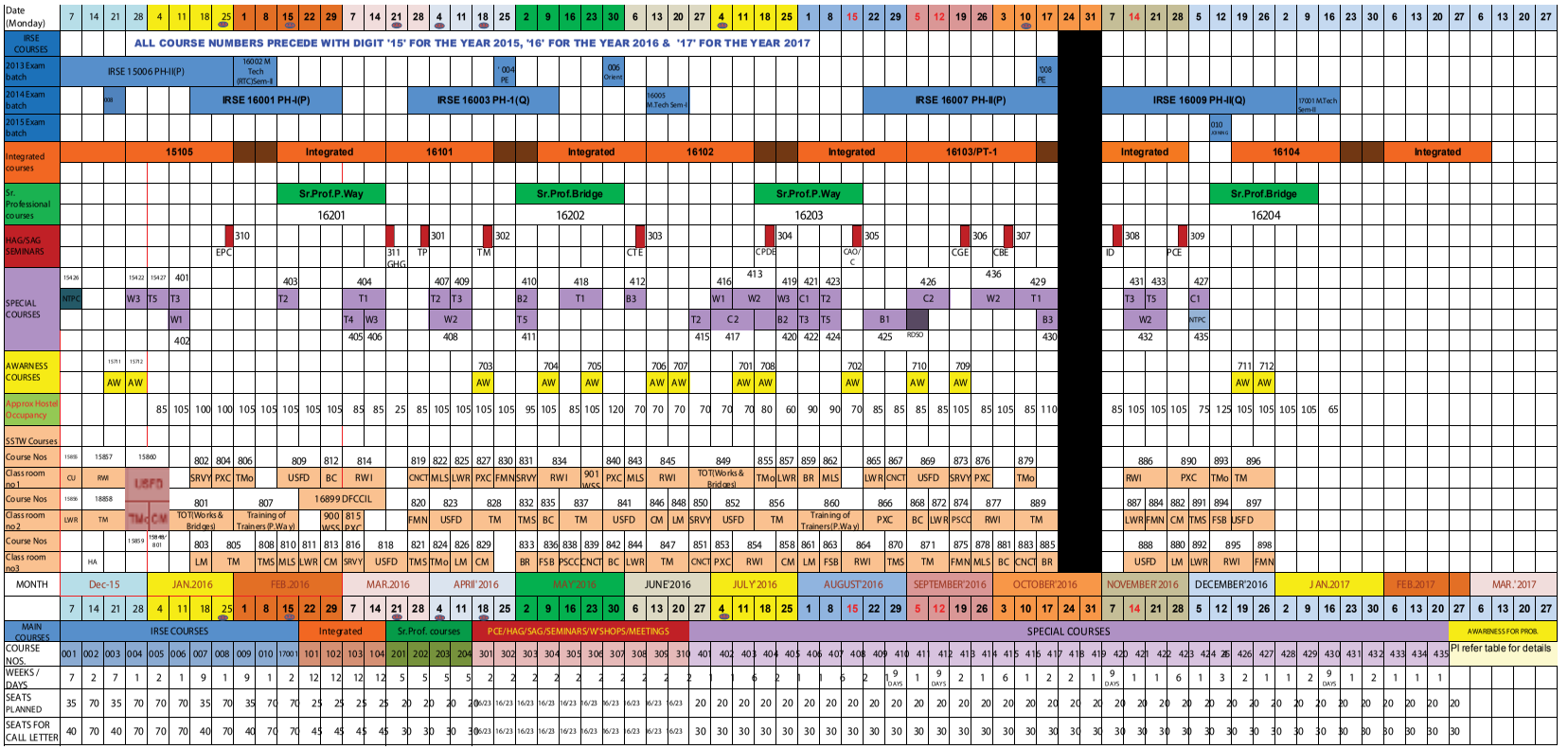


| SPL COURSES | COURSE NAME | No. | No. | No. | No. | TOTAL | WEEKS / DAYS |
|---|---|---|---|---|---|---|---|
| T-1 | MECHANIZED TRACK MAINT. & RENEWAL,RAIL GRINDING, USFD & TRACK MONITORING, | 404 | 418 | 429 | | 3 | 2 |
| T-2 | RAIL WHEEL INTERACTION& DERAILMENT | 403 | 407 | 415 | 423 | 4 | 6 DAYS |
| T-3 | POINTS & CROSSINGS AND YARDS | 401 | 409 | 422 | 431 | 4 | 1 |
| T-4 | RAILWAY FORMATION & GEO TECH INV | 405 | | | | 1 | 1 |
| T-5 | TMS | 411 | 424 | 433 | | 3 | 1 |
| B-1 | BRIDGE DESIGN ASSISTANT | 425 | | | | 1 | 3 |
| B-2 | PSC | 410 | 420 | | | 2 | 9 DAYS |
| B-3 | STEEL STRUCTURE | 412 | 430 | | | 2 | 9 DAYS |
| W-1 | LAND MANAGEMENT | 402 | 416 | | | 2 | 1 |
| W-2 | CONTRACT & ARBITRATION AND PROJECT MGMT | 408 | 413 | 432 | | 3 | 2 |
| W-3 | ARBITRATION FOR ARBITRATOR | 406 | 419 | 428 | 434 | 4 | 1 |
| C-1 | MODERN SURVEYING | 421 | 427 | | | 2 | 1 |
| C-2 | CONSTRUCTION ENGINEERS | 417 | 426 | | | 2 | 2 |
| NTPC | SPECIAL COURSE FOR NTPC ENGINEERS | 414 | 435 | | | 2 | 1 |
| | | | | | | 35 | |

| AWARENESS COURSES FOR PROBATIONERS OF OTHER DEPTT | | | | | |
|---|---|---|---|---|---|
| AWARENESS COURSES | Course No | SEATS PLANNED | Course No | SEATS PLANNED | WEEK |
| ACCOUNTS | | | | | 1 WEEK |
| ELECTRICAL ENGG | | | | | 1 WEEK |
| MECHANICAL ENGG | | | | | 1 WEEK |
| SIGNAL ENGG | 16701 | | | | 1 WEEK |
| STORES | | | | | 1 WEEK |
| PERSONEL | | | | | 1 WEEK |
| TRAFFIC | 16706 | 32 | 16707 | 31 | 1 WEEK |

| SN | Course code | SSTW COURSES | No. | No. | No. | No. | No. | No. | No. | No. | No. | Tot l | Wks | Tota l wks |
|---|---|---|---|---|---|---|---|---|---|---|---|---|---|---|
| 1 | TOT(P.WAY | Training of Trainers (P.Way) | 807 | 860 | | | | | | | | 2 | 3 | 6 |
| 2 | TOT(B &W) | Training of Trainers (Works & Bridges) | 801 | 849 | | | | | | | | 2 | 3 | 6 |
| 3 | RW | Rail Wheel Interaction & derailments | 814 | 834 | 845 | 854 | 864 | 877 | 886 | 895 | | 8 | 2 | 16 |
| 4 | TMS | TMS | 808 | 821 | 832 | 870 | 891 | | | | | 5 | 1 | 5 |
| 5 | PXC | Points, Xings & Curves | 804 | 815 | 827 | 840 | 853 | 866 | 876 | 890 | | 8 | 1 | 8 |
| 6 | USFD | USFD, Welding & Rail Grinding | 809 | 818 | 823 | 841 | 852 | 869 | 888 | 897 | | 8 | 2 | 16 |
| 7 | LM | Land Management | 803 | 826 | 848 | 861 | 880 | | | | | 5 | 1 | 5 |
| 8 | MLS | Mangement of Store & Land | 810 | 822 | 843 | 862 | 878 | | | | | 5 | 1 | 5 |
| 9 | TMo | Track Monitoring | 806 | 824 | 855 | 879 | 893 | | | | | 5 | 1 | 5 |
| 10 | BR | Inspection & Maintenance of Bridge | 833 | 859 | 885 | | | | | | | 3 | 1 | 3 |
| 11 | LWR | Long Welded Rails | 811 | 825 | 844 | 857 | 865 | 872 | 887 | 892 | | 8 | 1 | 8 |
| 12 | TM | Mechanized Track Maint. & Renewals | 805 | 828 | 837 | 847 | 856 | 871 | 889 | 896 | | 8 | 2 | 16 |
| 13 | CM | Contract Management | 813 | 829 | 846 | 858 | 882 | | | | | 5 | 1 | 5 |
| 14 | FSB | Fabrication of Steel Bridges | 836 | 863 | 894 | | | | | | | 3 | 3 Days | 3 |
| 15 | PSCC | PSC Construction | 817 | 838 | 874 | | | | | | | 3 | 3 Days | 3 |
| 16 | CNCT | Concrete Tech | 819 | 839 | 851 | 867 | 883 | | | | | 5 | 1 | 5 |
| 17 | FMN | Formation | 820 | 830 | 875 | 884 | 898 | | | | | 5 | 1 | 5 |
| 18 | BC | Building Construction | 812 | 835 | 842 | 868 | 881 | | | | | 5 | 1 | 5 |
| 19 | SRVY | Survey | 802 | 816 | 831 | 850 | 873 | | | | | 5 | 1 | 5 |
| 20 | WS | Water Supply and Sewerage including | 900 | 901 | | | | | | | | 2 | 1 | 2 |
| 21 | DFCCIL | | 899 | | | | | | | | | 1 | 1 | 4 |
| | | | | | | | | | | | | 101 | | 136 |

Indicates Holiday in that week

Indicates Monday being holiday

1 Week at RDSO for BDA course

To IRTMTC / RDSO

BREAK FOR PROJECT