IRICEN JOURNAL OF CIVIL ENGINEERING

ज्ञान ज्योति से मार्गदर्शन

VOLUME 6, No. 2 www.iricen.indianrailways.gov.in JUNE 2013

Well Sinking

Tunnel Ventilation

Box Girder Launching

Indian Railways Institute of Civil Engineering, Pune - 411001

Recommendations of CTE Seminar

Held from 25- 04- 2013 to 26- 04- 2013
At
IRICEN, Pune

Following important items were discussed in CTE Seminar held in IRICEN and following recommendations were sent to Railway Board:

1. The data storage capacity of existing USFD machines should be increased, RDSO to issue necessary guidelines.
2. Insertion of normal glued joint is not possible at many locations especially near turnouts. Hence for such locations, in situ glued joints to be allowed. RDSO asked to formulate the specifications.
3. Patrolling of track is a costly affair and it has its own level of reliability. Hence RDSO should look for the availability of technology from world over which can help to detect rail/weld fractures.
4. RDSO to study the proforma for joint inspection of points and crossing and decide the revised proforma jointly with signaling department.
5. Non-availability of slow down tolerance in IRPWM poses troubles in open line; PWI's are imposing caution order based on their gut feeling. Hence slow down tolerance must be legislated in IRPWM.
6. For creation of post for opening of new section, surrenders should not be expected from existing posts of trackmen being in safety category.
7. The duties of PWM's can be upgraded, a committee of CTE/ WR, CTE/SR and CTE / NR is formed to deliberate on the duty list of PWS and their yardstick.
8. The track men should also be considered for promotion to technician grade III. Railway Board may issue orders.
9. Mates may be included in the scheme "LARSGESS".
10. All future drawings by signaling directorate of RDSO involving laying of cables/new track attachment on track, should be got checked by track directorate before issue of drawings.
11. Alternate Hectometer may be placed on either side in case of single line.

Index

Suggestion for improvement of **IRICEN JOURNAL OF CIVIL ENGINEERING** are welcome from the members. Suggestion may be sent to mail@iricen.gov.in

Guidelines to contributors

Articles on the Railway Civil Engineering are welcome from the authors. The authors who are willing to contribute articles in the IRICEN Journal of Civil Engineering are requested to please go through the following guidelines :

1. The paper may be a review of conventional technology, possibilities of improvement in the technology or any other item which may be of interest to the readers. The paper should be reasonably detailed so that it could help the reader to understand the topic. The paper may contain analysis, design, construction, maintenance of railway civil engineering assets. The paper should be concise.
2. The journal is likely to be printed in a paper of size 215 mm X 280 mm. While sending the articles the author should write in 2 columns. Sketches, tables and figures should be accommodated in a 2 column set up only.
3. Author should send the original printout of photograph along with the digital copy of the photograph.
4. Soft copy as well as hard copy of article must be invariably sent to the editors of concerned subject.
5. Only selected articles will be included in the IRICEN Journal of Civil Engineering.

From director's Desk:

Dear Readers,

Hills and rivers are wonders of nature that generate the feeling of awe in humans. Constructing railway lines by burrowing through hills and spanning over major rivers are highly challenging jobs of a Civil Engineer and more so for Railway Engineers as the loads carried by a railway line are much heavier. Therefore, gradients and curves have to be much flatter than a roadway.

Several mega projects are presently under construction on Indian ailways. Two bridges over river Ganga at Patna and Munger respectively in Bihar, over river Brahmaputra in Assam and river Hoogly in West Bengal as well as a very unique bridge with longest single span on River Chenab in Jammu & Kashmir are at various stages of construction. While the bridge on river Ganga in Patna is one of the longest, Chenab Bridge in Jammu & Kashmir is one of the highest, higher than Eiffel Tower. These bridges have many features and technologies which are being used for the first time on Indian Railways. The use of new features and technologies will raise us to higher orbit in bridge construction. We should try and learn from these experiences.

Tunnels are very interesting structures and each site poses new challenges and hence new learning avenues. Documentation on tunnels is essential to create a useful pool of knowledge. Recently, the longest tunnel in India (approx. 11 km long) at Pir Panjal in Jammu & Kashmir connecting Banihal and Quazigund has been opened for traffic. Northern Railway has come up with a publication on the subject.

This journal attempts to bring out the papers on such unique structures and much more. I hope you would find this issue of IRICEN Journal interesting and informative.

सी. पी. तायल

(C.P. Tayal)
Director

Pune
June 2013

Budget allocation Rs. 3,120-crore to Metro Phase III project

The Delhi Metro Rail Corporation (DMRC) got an increased budgetary outlay of Rs. 3,120 crore for 2013-14, for the construction of Metro Phase III in the capital, with seven corridors covering nearly 140 km of the city. This will be the largest expansion project by the DMRC so far.

The major highlight of the Metro expansion is the connections two arterial roads namely the Ring Road and the Outer Ring Road. The Phase III will also extend to the satellite cities of Faridabad and Bahadurgarh for which the Delhi Metro has received Rs. 120 crore.

To further strengthen the financing arrangement of the Delhi Metro, Finance Ministry has also hiked the allocation of external funding through soft loans.

The DMRC gets a good share of its funds from Japan International Cooperation Agency (JICA). This assistance from JICA, in the form of soft loans, has been increased to Rs. 1,750 crore.

Ref. : Construction Technology, April, 2013, Page: 30

Metro among top 100 infra global projects

The Hyderabad Metro Rail Project has been selected as one of the top 100 strategic global infrastructure projects to be showcased at the forthcoming Global

Infrastructure Leadership Forum being held in New York in Feb. - March, 2013. 'Strategic 100' is a list of top 100 infrastructure projects selected on the basis of their potential to make significant difference to their cities/region/country in terms of overall performance and competitiveness.

Two other Indian projects have also figured in this prestigious list as in the GIFT city (Gujrat International Finance Tech city) costing Rs. 72,600 crore (US$ 13.2 billion) and the Mumbai-Anmedabad High Speed rail project costing Rs. 60,000 crore (US$ 10.89 billion) apart from the Rs. 14,132 crore (US$ 2.6 billion) elevated metro project.

Ref. : Construction Technology, January, 2013, Page: 26

Six corridors identified for high-speed rail project.

According to Railway Minister, the government has identified six corridors for developing high speed rail transit systems and is working on a pilot project between Mumbai and Ahmedabad. He further said that a project steering group is assessing options for the pilot project and viable financial models need to be evolved.

The minister said public private partnerships could be explored for such projects, but added that no private firm would participate in such projects for 'altruistic purposes' so returns on their investment must be

ensured. Railway Chairman Vinay Mittal however, expressed caution over private participation.

Ref. : Construction Technology, March, 2013, Page: 36

More Dedicated Freight Corridors

To decongest the current rail network for passenger trains , the IR is planning five more corridors despite tardy progress of construction of the eastern and western corridors, said the railway minister while presenting the railway budget. Covering a length of 3338 km they are under schemes sponsored by external agencies . The minister disclosed that he has ordered a preliminary engineering and traffic survey to be conducted by RITES for four corridors, while underlining his preference for an additional fifth corridor down

south. While these four corridors would put in place construction work for 6163 km length of freight rail track,the fifth will link Chennai with Bangalore. With these in place the country will have a dedicated freigt corridor of almost 10,000 km.

Ref: NBM&CW, April 2013, Page: 30

Focus on Dedicated Freight Corridor

The focus of the railways and General Budget was to give a major push to all DFC Projects to capture the freight traffic currently locked up at places . Talking about the progress of DFC, it has been stated that land acquisition has been completed for a stretch of 2800km on the eastern and western arms of the project. Contract for 343km line for RS3300 crore has been signed and contract for 1,500km on the two corridors would be awarded by the end of this year. The project, once completed would mark an inflexion point in the 150 year history of the railways,which has so far only mixed traffic across its network, said the Railway minister. IR will rope in the private sector and the state governments in order to complete the ambitious projects in time, he added.

Ref: NBM&CW, April 2013, Page: 30

Rail Link Pact with Bangladesh

Dhaka and New Delhi have signed a rail link pact, which makes Tripura to be the second state to have rail link with Bangladesh after west Bengal connected to Bangladesh. Linking Agartala by rail was suggested long back but could not move ahead , It was revived in 1998 and it was agreed that construction of Akhaura - Agartala would be financed by grant from India. The new line would be from Agartala to Gangasagar in Bangladesh ,involving a double line and additional loop lines at two stations in Bangladesh. Opening of this important rail link would help in promoting trade and people-to-people contacts across the borders. In addition, it would provide access to Tripura through Bangladesh and other northern and eastern states of India and open up new markets in these states for goods manufactured. This link would also be vital for the Trans-Asian Railway Network, of which both the countries are members. As part of TAR, India is already constructing a 350km rail link from Jiribam(India) to Moreh in Myanmar.

Ref: NBM&CW, April 2013, Page: 30

New Rail Factories

Presenting the Railway Budget , the railway minister announced the setting up of new rail manufacturing facilities. These , he said would include a forged wheel factory in Rae Bareli in collaboration with RINL, a greenfield mainline electrical multiple unit manufacturing facility at Bhilwara in collaboration with BHEL, a coach manufacturing unit at Sonepat in Haryana, a midlife rehabilitation workshop in Andhra Pradesh, a workshop for repair and rehabilitation of motorized bogies in Madhya Pradesh, and a wagon maintenance workshop in Odisha. For most of these, IR would tie up with the state governments, In addition, the minister said 60 stations would be upgraded to Adarsh stations. Track structures would also be upgraded using 60kg rails, 260 meter welded rail panels and improved flash butt welding technology.

Ref: NBM&CW, April 2013, Page: 32

India's First Monorail gets Rolling

It is a dream coming true for the Mumbaikars as India's first monorail completed its test runs. The first phase of this projects between Wadala and Chembur, a distance of 8.3km is expected to be thrown open to public in August this year. It is fast, fun, and convenient claimed state chief secretary inspecting the test run. With a speed of 32 km/hour, the Mumbaikars will be able to cover the 8.8 km route in flat 17 minutes at a nominal fare. The train will have four compartments with a capacity of carrying 480 passengers. Nearly one lakh commuters are expected to enjoy world class travel experience on this track daily. The second phase of this project with 10.4 km stretch is expected to be completed by next year.

Ref: NBM&CW, April 2013, Page: 32

Kochi Metro

Construction work for the Kochi Metro is expected to begin soon and completed within three year, said Sri. E. Sreedharan. The project, a long cherished-dream of the locals has been planned in keeping with the cultural heritage and commercial needs of the city. Talking about work on monorail project in Thiruvanathapuram and Kozhkode, he said this could start this year as its clearance has been obtained. The stretch 20km track on this route is based on elevated rail – based system and is being taken up by the Kerala Metro Corporation.

Ref: NBM&CW, April 2013, Page: 32 & 33

A Check List of Metro Projects in the Country

A check list of status of various metro projects in the indicates that apart from Delhi, Jaipur and Chennai monorial, the remaining projects are still in the planning stage. Many of the projects like Hydrabad are facing delay. Of course this project has received the Best Engineering Projects of the year award at the Sixth Annual Global infrastructure Leadership Forum Conference being held in New York. Mumbai Metro phase –II is set to be scrapped following spate between the developer and the state government. The first phase of this project is running late and may not be ready till the end of this year as work on its stations are far from being complete.

Ref: NBM&CW, April 2013, Page: 33

DMRC'S Deepest Tunnel

Delhi Metro in its phase III is to construct its deepest tunnel at 29 mts below another line. The 37 km long corridor from Janakpuri west to Botanical Garden in Noida, part of phase III will pass through the existing Hauz Khas station and have a station at a depth of 29 meters against the normal depth of existing stations at 17 meters. To prepare for this engineering feat, Delhi Metro have begun a massive upgrade of construction infrastructure. Its unique aspects include, the topography and design of the station, the mode of construction and machinery deployed. The major challenge in this project is the construction of a tunnel below the existing one. The two tunnels will be separated by just three meters. To balance the pressure due to torque of the moving coaches in the tunnel and to ensure zero settlement of soil does not take place , real time online monitoring would be carried out constantly and at the diaphragm wall for which crack meters are proposed to be installed. To ensure that the construction does not affect the residential properties Mass Spring System will be used to mitigate the vibration. To curtail the noise during construction, sound absorbing material would be attached at the barriers, said DMRC.

Ref: NBM&CW, April 2013, Page: 33

DMRC Charts Construction Plan for Kochi Metro

The Delhi Metro Rail Corporation (DMRC) has finalised the plan to excute the construction works of Kochi Metro between Aluva and Pettah. The work will be executed in all four sectors : Aluva – Kalamassery, Kalamassery-Kaloor stadium, Kaloor stadium-Ernakulam south and Ernakulam south-Pettah, in a 300 metre stretch each simultaneously. The contracts for executing the works are expected to be finalized by the fag-end of March. According to sources, a contractor will not be awarded more than two contracts, and those getting the work have to simultaneously carry out the work.

Ref.: CE&CR March 2013 Page:10

Work on Delhi Manorail Project to Start

Delhi would boast of North India's first monorail network by 2017 with the city Government fast – tracking work on a 11-km corridor in East Delhi that would be integrated with three different lines of the existing Metro network.

The first monorail corridor from Shastri Park Metro Station to Trilokpuri will have 12 stations and the Detailed Project Report has been reviewed and approved by the Delhi Metro, which would implement the project.

Work on the project would start in the next couple of months and the corridor would be commissioned in 2017 at a cost of Rs.2235 crore.

The Delhi Government took to the route of monorail, which is not a successful mode of transport like the Metro, to take public transport to door steps of people in congested colonies where mass rapid transport like Metro cannot be constructed.

The corridor would have three inter-change points at Shastri Park, Nirman Vihar and Trilokpuri thereby providing connectivity with the existing Dilshad Garden-Rithala line, Anand Vihar – Dwarka and the proposed Mukundpur – Yamuna Vihar under Phase-III of the Metro.

"It is easier and cheaper to lay monorail lines than Metro lines. The monorail can take sharp curves. It can also run in densely populated localities as it takes lesser area to operate", Mrs. Dikshit said.

The 12 stations on the line are Shastri Park, Kailash Nagar, Gandhi Nagar, Taj Enclave, Geeta Colony, Guru Angad Nagar, Scope Tower, Ganesh Nagar, Mother Dairy, Patparganj, Kotla and Trilokpuri.

The corridor would start from Shashtri Park Metro Station and culminate at Trilokpuri via Yamuna Pusta Road, Raja Ram Kohli Marg, Geeta Colony, Patparganj Road, Vikas Marg, Ganesh Nagar, New Patparganj Road, NH-24, Sanjay Lake and proposed Trilokpuri Metro Station.

Ref.: CE&CR March 2013 Page:12

PROJECT & CORPORATE BRIEFS

Tata Corus to Supply Steel Rail to Hyderabad Metro

L&T Hyderabad Metro Rail Ltd has awarded steel rail supply contract to Tata Corus.

The supply deal is estimated at about Rs.180 crore. The rails will be deployed in the Rs.16,000-Core elevated metro rail project spanning 72 km. The first consignment will reach Indian port shortly and will be moved to Hyderabad Metro yards.

Two other contracts for automatic fare collection and lifts and elevators are expected to be finalized shortly. Some of the best known companies from across the globe are in fray for both these contracts.

Tata Corus was chosen for its ability to provide quality rails and its metallurgical capabilities. Metro rail projects require different grade superior rails. The rails will be from its French plant but the ingots will be made in the UK, according to V.B. Gadgil, Chief Executive of L&T Hyderabad Metro Rail.

Hyderabad Metro Rail Managing Director N.V.S. Reddy said that the work on the project had gathered momentum and efforts are on to make it an aesthetically beautiful project.

L&T has engaged all its vendor-partners and consultants at an early phase of the project and its execution is being closely monitored. Global engineering and construction management firm Louis Berger is serving as an independent engineer while another firm Parsons and Brinckerhoff as a planning partner.

Ref.: CE&CR, March 2013, Page:18

Tata Projects, Aldesa Bag Rs.3,300 cr Freight Corridor Project

A consortium of Tata Projects and Spanish firm Aldesa has bagged a Rs.3,300 crore civil works contract to build a rail track between Bhaupur and Khurja in Uttar Pradesh, a 343-km segment of the dedicated eastern freight corridor.

"Physical work is expected to start from March-April. A letter of intent has been issued for the project," said Dedicated Freight Corridor Corporation Ltd Managing Director, Shri. R.K. Gupta.

The consortium beat nine bidders for the project. The letter of intent has been issued and the project is funded by the World Bank.

Those in race for the project were: CRFG-Soma, OHL-Punj Lloyd, KEC-Remput-Simplex, Essar-Patel-BSCPL, San Jose-ECI, STS-Era. IVRCL-KMB, Navyug-SEW and Gammon-CMC.

The 343-km project was sliced into three subsets, and the bidders had been qualified to bid for one, two or all three. In the bids, the consortia have offered various levels of discount depending on the size of project they get.

Seven consortia of the above bidders were qualified to bid for all the three packages. It took some time for the Dedicated Freight Corridor Corporation of India, a special purpose vehicle set up under the Ministry of Railway, to evaluate the lowest bidder, as the bids are submitted in multiple combinations.

Ref.: CE&CR, March 2013, Page: 22

Wheel MoU

State-owned steelmaker RINL-VSP and Indian Railways signed a memorandum of understanding on December 21 to establish a forged wheel factory at RaeBareli in Uttar Pradesh.

The plant is scheduled to be completed within 36 months at a cost of Rs. 10bn. It would have a production capacity of 1,00,000 wheel/year, which Minister for Railways said, would go a long way towards meeting IR's future requirements.

This is the second collaboration between RINL and IR, following the creation of a joint venture to establish an axle plant in New Jalpaiguri.

Ref. : Railway Gazette, Feb., 2013, Page : 21

Rail-side Warehousing Body to Buy Plots for Cold Chains.

Central Rail-side Warehousing Corporation has approached State Governments and public sector units for building warehouses near rail tracks. It has approached sates of Madhya Pradesh, Assam, Odisha, Gujarat, Andhra Pradesh and Maharashtra for plots.

The company is also seeking permission from the Railways for extra terminals to build rail-side warehouses. Cargo unloaded from trains is stored in these warehouses, from where they are loaded on to trucks after further sorting.

At present, the company operates 18 warehouses, based on a memorandum of understanding with the Railways wherein the latter provides the land and it designs and builds ware houses and provides space to traders and companies to handle bagged consignments of cargo.

CRWC also wants to get into cold chain based

warehouse services with facilities such as temperature-controlled options, sorting and repacking in smaller sizes. To begin with, temperature-controlled facilities are being set up at Dankuni in West Bengal.

Ref : Builder's Friend, April 2013, Page:16

A Touch of Glamour to Ecological Foundation.

With sustainability and eco-design being the locus of architecture, architect Hafeez Contractor along with his expert architectural team; have together created some spectacular green building projects, one of which is described below

The ONGC corporate office in Dehradun is a modern day architectural marvel, a structure which poises to be the pride of the country. Dehradun being a major tourist hill-station valley, needed a contemporary office building. At the same time, it could not tamper with the views of the refreshing hills and native wildflowers. Thus, the concept of this office camouflaged within a hill surround. The architect's idea was to create the impression that the surroundings have been lifted with the office building placed underneath, the result being a 1.5 acre living green roof thriving with native flora which would attract a host of indigenous birds. This grassy meadow is IGBC LEEDS Platinum rated modern building with state of the art amenities yet completely in sync with the local surroundings.

This 5 acre heavily contoured site has a built-up area of almost 1,50,000 sq ft spread over five floors. It has a parking capacity of 200 cars, a health club and a food court for its 580 employees. The structure has large light wells to enable natural light during the day and radiates in green throughout the night giving a sense of an illuminated emerald mound. A helipad on the living roof just adds a lot of exuberance and animation to this iconic structure in the mountains.

Ref : Builder's Friend, April 2013, Page:62

Ebbing Costs of Solar Energy

India's solar power policy is now entering stage two. Much needs to be reviewed and reworked, since the business of solar energy has witnessed massive turbulence in India as well as the world. In the first phase (2010-2013) of the Jawaharlal Nehru National Solar Mission (JNNSM), the target was to set up 1,000-2,000 MW of grid based solar power in the country. By 2013, the country has indeed commissioned some 1,000 MW of solar power, but 700 MW of this target comes from a non-JNNSM state, Gujarat.

Next phase of national solar mission kicks in from 2013. The Union Ministry of new and renewable energy has set a target of 9,000 MW of solar power by 2017, of which 5400 MW will be paid for by cash-strapped states.

Good news is that the rates have fallen from Rs.10.85 per kilowatt hour (kWh) in November 2010 to Rs.7.49 per kWh in December 2011. But the bad news is that 90% of domestic solar power manufacturers have either closed or filed for debt restructuring. Let us see what future holds for the energy of future.

Ref : Builder's Friend, April 2013, Page: 68

High Hopes by David Arribas Mazarracin and Jose Ignacio Gonzales Esteban

One of the world's tallest bridges has just been completed on a new highway in Mexico. A new road is under construction from Mexican capital to the city of Luxpan on the Gulf of Mexico, with the intention of boosting the development of the northern coast of the gulf by linking Mexico City to the Atlantic coast. One part of this new highway corridor is the Nuevo Necaxa – Avila Camacho motorway, in the northeast of Puebla State. It consists of 36 km of dual carriageway through the Sierra Madre Oriental, a very mountainous region that requires a total of six tunnels and seven viaducts to negotiate.

The San Marcos Viaduct over the San Marcos River is one of the most challenging parts of the contract- at this point the river runs through a very steep canyon that requires a construction of a large viaduct high above the valley.

The viaduct was designed with a pre-stressed concrete box girder deck and three main spans each 180 m long, flanked by spans of 98m and 57m at each end. All of the five longest spans were built by the balanced cantilever method, and end spans were built using false work. The cross-section is a box with a top slab width 18.7m and a variable depth of 10m over the piers, reducing to 3.6m in the middle of the span. The bridge has a longitudinal slope of 5.8% and the alignment follows a curve of constant radius of 1,150m.

What is particularly notable about the structure is the height of its piers – the tallest rises to 208m, measured from the upper face of the foundation to the pier top, making it one of the highest in the world and what is believed to be the highest in the world for a bridge constructed using the balanced cantilever method.

Ref : Bridge Design & Engineering, Issue No. 70, First quarter 2013, Page: 32

Side Slide

The need to maintain transportation links during bridge replacement and rebuilding works is particularly critical in locations where travellers have no practical alternative. Sometimes this is done by building a new temporary bridge before the existing structure is demolished, but in Portland, Oregaon last month, a steel truss bridge was moved sideways and is now being used as the 'detour' bridge while a new crossing is built.

The 335m-long Sellwood Bridge over the Willamette River in Multnomah County carries more than 30,500 vehicles per day, and alternative routes require long detours. Hence, the prospect of closing it for an estimated two-year period while a new crossing was built was not considered an option for the bridge owner or the local community, and a solution was sought that would enable the bridge to stay in use during this time.

The proposal was to build a set of new piers directly in line with the existing ones and shift the steel truss sideways during a short closure. The operation was carried out successfully last month (January) and the bridge is now in use on a new alignment with temporary

foundation & substructure and will remain there until the new US$308 million structure is ready to open in 2016.

Ref : Bridge Design & Engineering, Issue No. 70, First quarter 2013, Page: 44

Location Privacy Rights upheld

Rumor says Facebook is going to start tracking users' locations at all times, to be able to earn more revenue from individuals' preferences and geo life. Google is revamping its AdWords advertising platform to integrate ad campaigns across all device screens. In fact, Google indicated that it will require all advertisers to pay for mobile ads even if they only wish to reach consumers on desktops. The revamp will allow customers to use contextual factors like location, time of day and device type to control integrated campaigns.

Google provides an example of how a user's location and device type could change the advertising message. "For example, a pizza restaurant probably wants to show one ad to someone searching for 'pizza' at 1 pm on their PC at work (perhaps a link to an online order form or menu), and a different ad to someone searching for 'pizza at 8 pm on a smartphone a half-mile from the restaurant (perhaps a click-to-call phone number and restaurant locator)," reads Google's blog.

Facebook is developing a smartphone application that will track the location of its users. The app is said to be scheduled for release by mid-March, and would run on handsets in the background even when the Facebook app or the phone isn't open or in use. The location data would help Facebook capture more advertising revenue as ads can be more targeted with information about a user's location and habits.

Technology, no doubt, is helping the individual users of smartphone as well as the commercial establishment using the location data and other details of the users; but there is more to it. Some service providers are crossing the limits of consumer privacy and going to the extent of capturing the personal information from the address books in mobile devices without the knowledge of the user. They are collecting many such details automatically. The awareness about this invasion to privacy is somewhat there in the West, with some or the other government agency looking after these issues. In India, still the level of awareness is almost nil. These issues are important and government will have to come up with regulation

Ref : GPS World , Mar 2013, Vol. 24, No. 3 Page: 8

New Technologies Used/Being Used in Construction of Mega Bridges at CHENAB and BOGIBEEL

By
Ajay Goyal*

SYNOPSIS

Two mega bridges, one on Chenab River in J&K project and one on Brahmaputra River at Bogibeel in NF Railway are being constructed. Both these bridges are unique in design. Since these bridges require provisions beyond Railways codes and manuals, lot of inputs have been taken in the form of foreign visits by IR officials and from consultants of national and international stature. Earlier also bridges like 3rd Godavari bridge in SCR have been constructed, which had unique design and construction feature but these were not used for upgradation of our codes etc.Whenspecial studies are conducted, a lot of effort of project personnel goes into it and lot of knowledge is gained.This knowledge is most of the times not reduced to technical write-up. For each type of specific study, a detailed report with related background material is required to be properly documented for use by Railway engineers for future reference. This work can be done either by officers involved in the projects or by RDSO. In this paper, items are being listed where costly studies have been undertaken during design, investigations and construction of these bridges. Also a view has been taken on alternative use of these technologies.

CHENAB BRIDGE

This bridge crosses deep gorge of Chenab River near Salal Hydro Power Dam. The gorge is very deep (359 m below bridge level more than the height of Eiffel Tower), therefore multiple spans were not possible, which necessitated construction of long span bridge (span 467m). The configuration of steel arch has been selected.

There are quite a few similar types of bridges in the world. Hell Gate Bridge, New York City (1913), Michigan Central RR Bridge (1925) with main span of 195m, Bayonne Bridge, New York City Area (1931), New River Gorge Bridge, West Virginia (1977), Clarion River Bridge, Clarion (1988) with 152m main span, Glade Creek Bridge, West Virginia (1989) with 3 span continuous steel truss of 579m span erected by aerial cableway, Cold Springs Canyon Bridge, Santa Barbara, CA , 213m arch main span.

Cold Springs Canyon Bridge, Santa Barbara, CA, 213m deck arch main span

The type of bridge being constructed is similar to above bridges but with a larger span. Method of erection proposed to be is by cable cars used in Glade Creek Bridge.

** CE/TM/CR*
Course No. 13201, SAG Refresher

Artistic impression of CHENAB Bridge – 467 m single span arch

Salient features of this bridge are enclosed at Anne. 1.

BOGIBHEEL BRIDGE

This rail cum road bridge is being constructed over mighty Brahmaputra. Brahmaputra is one of the largest rivers in Asia with a total length of about 2900 km of which a stretch of about 920 km lies in the north-east region of Indian territories having catchment area of about 1.80 lakh square kilometers. The river has three bridges at (a) Saraighat rail-cum-road, 1.296 km long (1x33.2m +10xl22.95m + 1x33.2m) (b) KaliaBhomora road Bridge at Tezpur, 3.015 km long (1x67.5m + 24x120m + 1x67.5m) (c) NaranarayanaSetu (Rail-cum-road Bridge) at Jogighopa,2.285 km long (1x32.6m + 14x125m + 1x94.6m + 3x125m + 1x32.6m). The fourth being constructed is rail-cum-road Bridge at Bogibeel, approximately 17 km downstream of Dibrugarh.

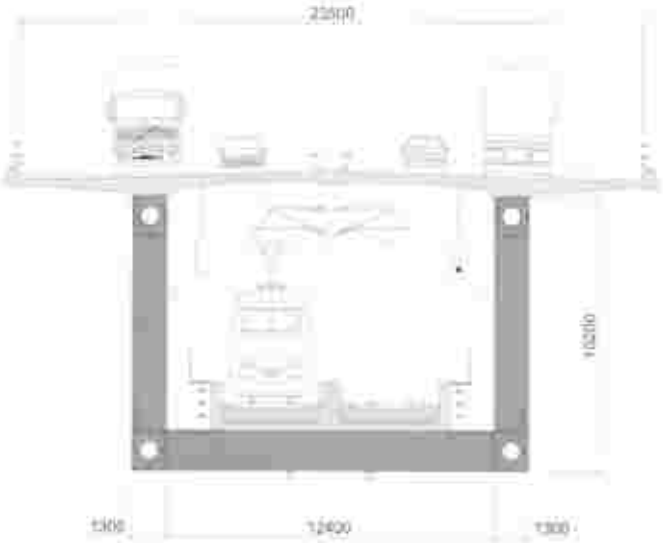

Composite WARREN Truss of 140m span with deck at top of Oresund Bridge

Two existing rail um road bridges are steel truss bridges and only road bridgeis PSC box. The bridge at Bogibeel is to be welded steel trusses of span 125m with concrete deck for road acting composite to steel truss. This is first of this kind in India. This bridge is similar to approach spans of Oresund Bridge in Denmark.

Proposed Bridge at BOGIBEEL with 125m span

So the bridge being constructed at Bogibeel is not a unique construction as far as world scenario is concerned but is new technology for India.

Salient features of Bogibeelbridge are enclosed as Anne. 2.

Studies under taken/being undertaken during these projects

1. Use of LIDAR survey
2. Use of SLIDE 5.0, Slope W, FLAC, UDEC and 3DEC analysis for assessing stability of slopes (natural and built)
3. Painting Scheme for life of 15 years
4. Painting Scheme for life of 30 years
5. Use of HSFG bolts
6. Use of high strength steel
7. Use of spherical bearings
8. Health Monitoring Systems :
   a. Strain gauging of critical components
   b. Corrosion monitoring of critical members
   c. Deflections at critical points
   d. Recording of seismic activity at the bridge site
   e. Anemometer which willbe interlocked with the movement of the trains over the bridge automatically after a prescribed wind speed.
   f. Piezometers in bore holes to measure pore water pressure at foundation levels
   g. Tests like seismic shear wave velocity test, slake durability test, P&S wave velocity test
9. LWR on bridge
10. Use International Codes like British Standard Code (BS 5400); UIC and Euro codes as Indian codes are deficient. Experience can be used to update railway codes.
11. Composite truss bridge. Can be upgraded for under slung ballasted decks for railway tracks
12. Clean Warren truss with no gussets, shape fit for corrosion resistance
13. Wind Tunnel study

Brief details of each technology is given below

(1) **LIDAR Survey.**

LIDAR (**L**ight **D**etection **A**nd **R**anging) is an optical remote sensing technology that can

- Measure distance
- Measure speed
- Measure rotation
- Measure chemical composition and concentration

LIDAR technology has applications in archaeology, geography, geology, geomorphology, seismology, forestry, remote sensing, atmospheric physics, airborne laser swath mapping (ALSM) and contour mapping. For survey application, it can be used to create DTM (Digital Terrain Models). Accuracy of below 50 mm can be achieved; a reference point is needed to link the data with the WGS (World Geodetic System). LIDAR survey has been used to correctly draw three dimensional model of terrain at bridge site. Slopes of gorge derived from survey have been used for slope stability analysis.

(2) **SLIDE 5.0, Slope W, FLAC, UDEC and 3DEC**

SLIDE 5.0, Slope W, FLAC, UDEC and 3DEC are software's and tools for slope stability analysis of existing and prepared slopes. Slide 5.0has been used in project, now newer version SLIDE 6.0 is also available. It is the comprehensive slope stability analysis software, complete with finite element groundwater seepage analysis, rapid drawdown, sensitivity and probabilistic analysis and support design. All types of soil and rock slopes, embankments, earth dams and retaining walls can be analyzed. State of the art CAD capabilities allow you to create and edit complex models very easily. Flows, pressures and gradients are calculated based on user defined hydraulic boundary conditions. Seepage analysis is fully integrated with the slope stability analysis or can be used as a standalone module. Slide 6.0 has extensive probabilistic analysis capabilities - you may assign statistical distributions to almost any input parameters, including material properties, support properties, loads, and water table location. The probability offailure/reliability index is calculated, and provides an objective measure of the risk of failure associated with a slope design. Sensitivity analysis allows you to determine the effect of individual variables on the safety factor of the slope. Support types like tieback, end anchored, soil nailing, micro pile and geo-textile can be designed.

UDEC (Universal Distinct Element Code) is a numerical modelling code for advanced geotechnical analysis of soil, rock, and structural support in two dimensions. UDEC simulates the response of discontinuous media (such as jointed rock) that is subject to either static or dynamic loading.

3DEC, The three-dimensional distinct element program was used to investigate the stability of the CHENAB bridge abutments. 3DEC is a three-dimensional numerical code, utilizes a Lagrangian calculation scheme to model large movements and deformations of a blocky system, and

allows for modelling of large movements and rotations, including complete detachment, of rigid or deformable discrete blocks. The study has been done by Central Soil and Materials Research Station, New Delhi and Indian Institute of Technology Delhi

(3) & (4) Painting Scheme for life of 15 years and 30 years

Painting Scheme for life of 15-20 years for the viaduct portion of Chenab Bridge has been approved in consultation with RDSO. Painting Scheme for arch portion having life of more than 30 years is also being finalised.

(5) Use of HSFG bolts

Guidelines for use of HSFG bolts have already been approved by RDSO. One of the main sources of input was interactions with designers of Chenab Bridge. HSFG bolts are now being used only for composite ROB construction. This will be first major project using HSFG bolts for Railway bridges.

(6) Use of High strength steel

Both of these bridges use high strength steel. In these bridges, steel grade of Fe 540 is proposed to be used. The use of high strength steel has been restricted in IR by the factthat no advantage is derived by using high strength steel as fatigue criteria governs the allowable stress which is independent of grade of steel and fatigue strength is based on stress ratio concept. Use of higher strength steel has given advantage as fatigue criteria has been used from EURO codes. Use of high strength steel has made the bridges lighter. RDSO has also issued draft guidelines for determining fatigue strength of bridges based on EURO codes. These bridges also use high quality welding techniques and their testing methods.

(7) Use of spherical bearings

Spherical bearings are being used in CHENAB Bridge because of obvious advantages. IR does not have any code or guidelines for design of spherical bearings. Designs done in this project can help in finalising guidelines for design of spherical bearings for large span railway bridges.

(8) Health monitoring systems

Health monitoring systems like Strain gauging of critical components, Corrosion monitoring of critical members, Deflections at critical points, Recording of seismic activity at the bridge site, Anemometer which will interlock the movement of the trains over the bridge automatically after a prescribed wind speed, Piezometers in bore holes to measure pore water pressure at foundation levels have been adopted.

Monitoring of corrosion in steel is of extreme importance. This can be done by multiple Echo ultrasonic Digital thickness gauges, which can measure metal thickness without removing paint. These instruments come for steel thicknesses from 3mm to 250mm, use 2.5 MHz to 5 MHz probes, have accuracy of 0.1 mm. British Standard BS EN 15317:2007 is specification of such equipments.

Recording of seismic activity helps in ensuring safety of bridge not only from earthquakes but also from human activities such as mining or oil and gas production change the stress distribution or the volume of a rock mass. When the rock attempts to redistribute the stresswithin the rock mass, it will suddenly slip or shear along pre-existing zones of weakness such as along faults or fracture networks. This small failure results in the release of energy in the form of seismic wave. Monitoring can map out the location where such events occurred as well as the magnitude of the event.

Pore water pressure monitoring specially in initial years after construction is of importance for stability of foundations.

Specifications for all above systems can be finalised with experience obtained at Chenab Bridge.

(9) LWR on bridges

As per Indian Railway codes, use of LWR on bridges is very restrictive. LWR is permitted on small spans with rail free fastenings, which in true sense is not LWR. LWR's have been provided on many bridges in IR, but most of these are either on trial basis or with some minimal calculations based on UIC 774-3R. A committee was set up by Railway Board under Director/IRICEN on the subject but final report is still awaited. For proper design of LWR on bridges, some suitable software is required based on UIC 774-3R as manual calculations are not possible. Chenab Bridge is proposed to be provided with LWR and analysis will be done with suitable software. It will be prudent to acquire software as part of this project which then can be adopted by IR after validation. Subsequently Bridge Rues can also be revised to facilitate LWR on bridges.

(10) Updation of Indian Codes

International Codes like British Standard Code (BS 5400); UIC and Euro codes have beenused in design as Indian codes are deficient. Experience can be used to update railway codes.e.g. International codes limit deflection of steel bridge only based on deflection under live load where as Railway code limits deflection under total load. With

deflection based on total load, longer span bridges cannot be economically designed, logically also defection under dead load is fixed and it is the deflection under live load which matters. I.R.S. Code specifies a limit of (span)/600 for deflection due to DL+LL+ impact. Euro Codes specify performance limits (Euro code 1- part 3 covers these limitations).For longerspans, generally the track geometry at the supports and vertical acceleration of trains form the limiting criteria and not the maximum deflection. AREMA manual specifies limit of (span)/640 due to LL+Impact only & has been followed (DL has been excluded which is substantial because of top deck for road).

SimilarlyFatigue provisions of EURO codes have been used. I.R.S. Codes give fatigue limits based on stress ratio fmax/fmin. AREMA and Euro codes specify allowable stress ranges for a given nos. of cycles for various types of welded and non welded connections irrespective of dead load stress values. These have been followed. Euro codes also permit reduction of fatigue loading for members carrying loads from double track.Because of EURO/AREMA provisions, use of high strength steel gets justified.

Further Critical issues in fabrication like welding of thicker plates and use of high strength steels have been dealt with. Specifications of Shear Studs and Welding Equipment, erection of steel trusses of limited depth with temporary strengthening, if necessary, have been resolved with the help of EURO/AREMA codes.

(11) Composite truss bridge

Composite truss has been used for the first time in Bogibeelbridge. The technology can now be logically upgraded for large span under slung ballasted deck bridge for Railway.

(12) Clean Warren truss with no gussets.

Clean warren truss with no gussets has been used in Bogibeel bridge. Fig below shows the finished proposed truss.

Neat Truss with no scope of dust or water accumulation

The advantage of this shape is that water and dust cannot accumulate. This will reduce corrosion on bridges and is very suitable for FOB's in metros which are always topped with dust and are prone to faster corrosion.

Neat Truss with no scope of dust or water accumulation

Conclusion:

The detailed investigations done in course of construction of these two bridges, if properly and truthfully documented, can go a long way in upgrading bridge construction in Indian Railways. Most important aspect of each study is its usefulness (cost/benefit analysis) and identification of suitable sources for conducting these studies. Also we must explore how to make alternative use of these studies.

ANNEXURE – 1

SALIENT FEATURES OF CHENAB BRIDGE

Bridge is part of construction of a new Railway line in J&K state from Udhampur to Baramulla.The alignment crosses deep gorges of Chenab River near Salal Hydro Power Dam, which necessitates construction of long span bridges. The configurations of steel arches have been selected.

The Chenab Bridge, 359 m above river bed, will be the highest bridge in the world, and longest span for BG Rail line with arch span of 467 m.

Salient Features of Chenab Bridge:

1. Total length of the Bridge	:	1315 meters
2. Contract amount	:	Rs.5120 millions
3. Design life of the bridge	:	120 years
4. Design speed	:	100 Kmph
5. Height of Bridge (river bed to formation)	:	359 m
6. Main Arch Span	:	467 meters
7. Total No of Spans	:	17 Nos.
8.Deck Width		
Viaduct Portion	:	13.50 meters
Arch Portion	:	17.00 meters
9. Max. Ht. of Steel Pier	:	133.734 meters
10. Max. Ht. of Concrete Pier	:	49.343 meters
11. Max. Size of Foundation		
Viaduct Portion	:	18 x 15 x 4.15 meters
Arch Portion	:	50 x 30 meters
12. Total Steel Fabrication	:	25,000 MT
13. Seismic zone	:	Zone V
14. Design Wind Velocity	:	266 kmph (at deck level)
15. Geology of terrain		
Slope along Katra side bank	:	+35 to 50 degrees
Slope along Kauri side bank	:	vertical to sub-vertical
• Agency	:	CBPU (Chenab Bridge Project Undertaking) Joint Venture of Ultra- AFCON-VSL
•Concerte Quantity	:	42639Cum
• ReinforcementSteel	:	3179 MT
• Excavation	:	510000 Cum
• Grouting	:	1300 MT.
• Drilling	:	53400 Rmt.
• Structural Steel Work – Kauri End	:	13930MT
Structural Steel Work – Bakkal End	:	11470MT

Special design features include

Redundancy:

This bridge is vulnerable from security point of view as any damage to the bridge will not only cut off the link between two regions of Jammu and Kashmir but is also likely to provide wide publicity to the anti-social elements. Hence a provision has been made in the design for the following situations:-

- If an element is removed either from truss of the arches or from steel spandrel columns it would still be possible to run the traffic over the bridge at a restricted speed of 30 kmph.
- If one of the columns gives way, the deck would not collapse. It would be possible to restore the bridge for normal operation after carrying out required repairs.

Blast load:

Structure has been designed for ballast load. For this purpose expertise of DRDO had been utilized.

Erection methodology:

- For the erection and maintenance of the Arch, an auxiliary Cable Crane is being installed. The Cable Crane consists of the self propelled equipment which is running on carrying cables.
- These cables are fixed to two pylons on each river bank.
- The pylon height is approximately 130 m at the Laole end and approximately 100 m at the Katra end.
- These cranes have a capacity of lifting 35 MT in single operation.
- Self climbing cranes are being used for erection of such high pylons.
- This technique of erection by cable cars is being used for the first time in the country for construction of such a large span of bridge.

ANNEXURE – 2

SALIENT FEATURES OF BOGIBEEL BRIDGE

Two existing bridges are steel truss bridges and one PSC box, the bridge at Bogibeel is to be welded steel trusses of span 125m with concrete deck for road acting as composite to steel truss. This is first of this kind in India. This bridge is similar to approach spans of Oresund Bridge in Denmark.

Salient features of bridge are

1	Length	4315.20 m	
2	Span Arrangement	1x32.6m + 34x125m + 1x32.6m	
3	Type of superstructure	Composite welded warren truss girder with road deck at top chord (with shear connector) and rail at bottom deck.	
4	Superstructure Configuration	Two tier Bridge with 2 BG Tracks on the lower deck and 3 lane Road on the top deck.	
5	C/C of Truss	10.60m	
6	Depth of truss	12.50m	
7	HFL	102.92m (RL)	
8	Rail Level	118.297m	
9	Minimum required Navigational Clearence.	Horizontal	Vertical
		100m	10m

The proposed bridge falls in Seismic Zone-V as per IS:1893-2002.Bridge is for double track on bottom level and three lane road deck at top level. The warren type truss of 125m span consists of 10 panels of 12.16m each with centre to centre distance of bearing as 121.6m. The members shall consist of welded plates of either 'I' or 'Box'-sections. The Railway deck shall consist of cross girders at a spacing of 12.16m at the bottom chord joints of truss. The stringers and cross girders are of welded type with welded connections for lateral and cross bracing members. The roadway deck consists of composite top chord and cross girders. The roadway cross girders are at the same spacing of 3.04m. Two spans of 32.6m, one each at shores shall be required to be fabricated and launched along with 34 spans of 125m each.

Total length of bridge is was a critical issue to be decided. Length of bridge can be reduced by longer guide banks, so an economical combination has to be adopted. Following three combinations were initially analysed.

Length (m)	Configuration	Guide bunds (m)
315.2	34x125+2x32.6	2195(S) 3688(N)
6190.2	49x125+2x32.6	1445(S) 2138(N)
7065.2	56x125+2x32.6	1445(S) 1443(N)

Finally first combination was adopted by reducing guide bunds to 2043(S) 2792(N) after further studies.

Model Study at IRI Roorkee

All members are closed boxes or I beams. All joints are welded with special joint member which gives clean look. Chosen configuration reduces painting area considerably. All members are made up of welded plate elements only.

An important feature of bridge is composite construction of steel with its high tensile strength and ductility, and concrete with its compressive resistance. Design of composite girders for smaller spans up to 24.4m have been standardized by Research Design and Standards Organisation (RDSO) but this is first composite truss. There were some critical issues which were resolved like allowable deflection, fatigue provisions for various types of welded connections and design provisions of Composite Truss with Shear Studs.

◆◆◆

New Drawings of Temporary Arrangements Developed by RDSO

By
V B Sood*
Sandeep Agarwal**
Ramanuj Kumar***
P K Chawla***

SYNOPSIS

Temporary arrangements are required either for restoration of track aftersome accident/ major washout or for supporting track for creating new opening/ for rehabilitation of the existing bridges. The temporary arrangement drawings for RBG loading were issued by RDSO in early 1990s which required changes with revisions in loadings. RDSO has recently issued drawings for piers and abutments which are suitable for 25 t loading. This paper discusses the design philosophy followed for the new drawings and differences between the old and new drawings.

1. Introduction

Temporary arrangements are very important for the railways as these are not only required for restoration of traffic after breaches/ accidents etc. but also for creating temporary bridges which can be used for construction of new bridges and repairs/ rehabilitation of existing bridges in running traffic. The existing RDSO drawing nos. B/1484, B/1484/1, B/1484/2 and B/1484/3 (for c c cribs and piers for 18.3 m and 24.4 m spans), B/1486/1, B/1486/2 and B/1486/3 (For piers for 12.2 m span) and B/1529 and B/1728 (for abutments) were issued in early 1990s for RBG 1975 loading. Drawings for Reduced height (RH) girders for temporary restoration were issued in late 80s and early 90s (B/1568 series for 18.3 m span MBG loading, B/1503 series for 25.6 m span for RBG loading 1975) These drawings have become obsolete with passage of time due to advent of newer loadings, viz.MBG loading 1987and 25t loading 2008. A need was felt for revision of these drawings to make these suitable for present day loadings. Accordingly, RDSO took up this design project in 2011-12 and the new drawings were issued.

2. New drawings

a. **Temporary piers and abutment:** RDSO has issued drawing nos B/1484/1R, B/1484/2R, B/1484/3R and B/1484/4R for piers vide letter no. CBS/QRBE dated 29.03.2012and c c cribs B/1484/5 for abutmentsvide letter no. CBS/QRBE dated 26.04.2012/01.5.2012. Simultaneously, old drawing nos B/1484 series, B/1486 series, B/1529 and B/1724 have been withdrawn from RDSO's standard list of drawings.

b. **Drawings of RH girders:** Independently, RDSO has revised the RH girder drawings also in 2011/12. In place of old drawing nos. of series RDSO/B-1503 and RDSO/B-1568, new drawing nos. of series RDSO/B-11038, RDSO/B-11039 and RDSO/B-11040 have been issued.

3. New drawing of temporary piers

a. **Drawing Nos and Titles:**

(i) Drawing No. RDSO/B-1484/1R: "25t Loading-2008"

*Director (B & S) SB – II, RDSO
**ADE, B & S, RDSO
***SSRE, B & S, RDSO

Temporary Christ Church Crib piers: Key diagrams for 4.8m to 7.8m height.

(ii) Drawing No. RDSO/B-1484/2R: "25t Loading-2008" Temporary Christ Church Cribs: Plan arrangement for 4.8m to 7.8m height.

(iii) Drawing No. RDSO/B-1484/3R: "25t Loading-2008" Temporary Christ Church Cribs: Key arrangement and plan for 0.6m to 4.2m height.

(iv) Drawing No. RDSO/B-1484/4R: "25t Loading-2008" Details of cribs and clamps to be used for Temporary Arrangement.

b. Salient details:

(i) Maximum Base pressure on soil considered is 12t/m2 for cribs greater than 1.2m height. For 0.6m &1.2m cribs piers, it has been considered that there is no flowing water and bearing capacity of soil is taken as 16t/m2.

(ii) The design caters for wind load as 150 Kg/m2, seismic zone-V and water current height upto 2m with velocity as 3m/s.

(iii) Boulder filling shall be provided underneath the sleeper base upto minimum 600mm above the L.W.L. The boulder fill shall extend at least 1m in all directions beyond the wooden sleeper base to prevent any damage due to scour/settlements.

(iv) Below the Christ Church © C)crib pier, two layer wooden sleepers shall be provided whereas four wooden sleeper layers shall be there above the CC cribs. Out of these four layers, lower two shall be "open" to ensure load transfer only at node points of the cribs.

(v) Clamps/ Spikes: All wooden sleepers and bed plates shall be properly spiked together using c-shaped spikes.The wooden sleepers above the CC cribs shall be held in position using special clamps. The C C Cribs shall be held together using C C clamps and the entire crib arrangement shall be kept in position on the wooden sleepers below using sill clamps. All clamps are shown in drawing no. RDSO/B-1484/4R. Two options for C C clamps and sill clamps have been shown and either of the two can be used.

(vi) Number of C Cclamps in vertical legs of C C cribs shall be doubled if there are vertical joints in successive layers.

(vii) The drawings mention new type of clamps for C.C. cribs and sill clamps and also introduce a new 'top clamp' for use in temporary arrangements.

(viii) The detailed plan and key diagrams have been given for single line. For double line, the plan arrangement shall be suitably decided as per individual site requirements but the same have been checked from design point of view and guidance for the arrangement has been provided in the drawings.

c. Comparison with old drawings:

Item	Old Drawing	New Drawing
Design loads	Only for live loads and wind load at 150 kg/m2	For live load and wind load at 150 kg/m2, seismic zone V and water current height upto 2m with velocity as 3m/s.
No of drawings	Different drawings for spans of 18.3m and 24.4m	Single arrangement is valid for all spans upto 26.8m overall length
C C Crib Base . dimension	I. 0.6m Ht: 4.2m x 3.6 m ii.1.2m Ht: 4.8m x 3.6 m iii. 1.8/2.4/3.0m Ht: 5.4m x 4.2m iv. 3.6 m Ht: 5.4m x 5.4 m v. 4.2/4.8/5.4 mHt: 6m x 5.4 m vi. 6.0m/6.6/7.2/7.8 m Ht: 5.4m x 7.2m	Same dimensions of base but in between layers are changed.

4. New Drawing of temporary abutment

a. **Drawing No and Title:** DrawingNo. RDSO/B-1484/5 : "25t Loading-2008" Temporary Christ Church Cribs: Key diagram and Plan for Abutment."

b. **Salient details**: Drawing for Temporary Abutment for 25t loading RDSO/B-1484-5 consist of general arrangement showing abutment of both ends, elevation and plan details of one end of abutment and elevation & plan of details of 'T' section used in abutments. A table has been made showing

Dimension of sleeper base along track(B) for different overall length of girders with different height(d) of abutment. The salient details of the drawing are:

(i) The vertical load on abutment changes with span supported and the moment of the longitudinal load changes with the height from rail level to the bottom of sleeper base. Therefore the drawing has been prepared for nine configurations, including three ranges of overall lengths of girders, viz. < 14.4m, between 14.4m & 20.4m and between 20.4m& 26.8m and three ranges of rail level to bottom sleeper crib, viz. <1m, between 1m & 1.5m and between 1.5m &2.0m.

(ii) Design of abutment caters to theDead Load of soil/girder/track/C C Cribs, horizontal load due toactive earth pressure, surcharge pressure andlongitudinal forces/ vertical loads of live load, with maximum speed of 30 kmph.

(iii) Horizontal load of soil and surcharge retained by steel cribs supported by 4 nos inverted 'T' arrangement fabricated using ISMB 200s and supported on sleeper crib by screw spikes @150mm c/c.

(iv) Cross-section of'T' remains constant for all abutment configurations, butthe vertical leg length shall be adjusted/cut at site depending on the height of RH girder.

(v) Bearing capacity of soil is considered as 16t/m2.

(vi) The width of abutment is fixed as 4200mm for all configurations whereas the length of abutment along track varies from 2.0m to 3.4m.

(vii) Margins on all sides of the work area and shoulder/berm around the sleeper base essential for ensuring the stability of the earth slope have been shown in drawing.

(viii) The depth of abutment possible with this arrangement is only 2.0m from RL to the base. In case more depth is required, the relieving girder length shall be increased or another span shall be provided so that abutment depth is within limits.

(ix) Earth/ ballast retention arrangement for multiple tracks has been given.

c. Comparison with old drawings:

Item	Old Drawing	New Drawing	Remarks
No of drawings	One drawing was issued for each span/ height of girder.	Same drawing is suitable for various spans/ heights of girders.	Easier installation.
Earth retaining . arrangement	It consists of angle frame and 9 layers of wooden sleeper cribs.	It consists of 4 numbers of 'T' made with ISMB 200 for retaining soil and surcharge along with 2 numbers of steel c c cribs.	The new arrangement is simple and sturdier.
Base of abutment	11 layers of wooden sleepers.	Only three layers of wooden sleepers have been used.	Lesser sleepers and lesser excavation required.
Size of base dimensions	18.3 m span: 4.2m*2.745m with Base Pressure 1.7kg/ cm2 and 6.571m*2.745m with Base Pressure 1.0 kg/cm2	Different dimensions specified for different span/ height configurations. For 18.3 m span, the dimensions are 4.2m*2.5m to 4.2m*2.9m with base Pressure 1.6 kg/cm2	The dimensions in new drawings are smaller, so earthwork required is lesser. Easier installation.

5. **New designs of Reduced height Girders:**

a. **Drawing Nos and Title:**

For 14.4m overall length	RDSO/B-11038 RDSO/B-11038/1	General Arrangement Details of splice joints, Diaphragms, Bearings & Part List.
For 20.4m overall length	RDSO/B-11038/2 RDSO/B-11040 RDSO/B-11040/1 RDSO/B-11040/2	Assembly Drawing & Dispatch List. General Arrangement Details of splice joints, Diaphragms, Bearings & Part List. Assembly Drawing & Dispatch List.
For 26.8m overall length	RDSO/B-11039 RDSO/B-11039/1 RDSO/B-11039/2	General Arrangement Details of splice joints, Diaphragms, Bearings & Part List. Assembly Drawing & Dispatch List.

b. **Salient details of drawings:**

(i) Bracings and cross frames are provided with close fitted turned bolts 20 mm dia. so that leaves can be separated out.

(ii) The splices have been given with shop rivets since it is felt that providing the splices in field will be cumbersome, time consuming and unsafe if some error is made during assembly.

(iii) Since the relieving girders are used for emergency period only, so the fatigue for 0.6 million cycles is considered for calculating permissible stresses.

(iv) The Bed plate (50mm thick) must be provided below the bearing to distribute load to minimum three wooden blocks. The wooden blocks directly under bed plate shall be of good quality hard wood which shall not get cracked/crushed under loads.

c. **Comparison with old drawings:**

(i) 26.8m overall length:

Item	**Old Drawing No. RDSO/B-1503 series**	**New Drawing No. RDSO/B-11039 series**
Max. permissible speed	20 kmph	50 kmph
Connections of X frames, splice, bracing, etc.	With 22mm dia. rivets	With turned Bolts of 20mm dia.,to facilitate fast assembly and easy transportation
Splice joints	Two number splice joint were given at 4450mm distance from centre of girder with rivet joints	Bolted splices have been provided square so that the girders can be separated into three parts for easy transportation.
End X-Frame/ Diaphragm and lifting arrangement	End X frame was made up of angles 100X75X8. No lifting arrangement was there.	The end diaphragm having I section provided, with stiffenersat lifting points of the girders
Section	Twin I-section so that height of section was restricted.	Single I section as the track fixed on twin section cannot be relied upon for higher speeds
R.L.to bottom of girder	1605mm	1709mm
Weight of girder	57.80 t	37.727 t

(ii) 20.4m overall length:

Item	Old Drawing No. RDSO/B-1568 series	New Drawing No. RDSO/B-11040 series
Max. permissible speed	50 kmph on trial	50 kmph
Connections of X frames, splice, bracing, etc.	Welded. Could not be separated.	With turned Bolts of 20mm dia., to facilitate fast assembly and easy transportation
Splice joints	Joints of girders were provided with butt welds. No splicing was used.	Bolted splices have been provided square so that the girders can be separated into three parts for easy transportation.
End X-Frame/ Diaphragm and lifting arrangement	End X frame was made up of angles 75X75X8 with 6 mm weld. No lifting arrangement was there.	The end diaphragm having I section provided, with stiffeners at lifting points of the girders
R.L.to bottom of girder	1367mm	1345mm
Weight of girder	25.39 t	24.947 t

(iii) 14.4m overall length:

S. No.	New Drawing No. RDSO/B-11038 series	Old Drawing
1.	Max. permissible speed on girder is 50 kmph.	No old Drawings
2.	Turned Bolts of 20mm dia. are used in X frames, and bracings while rivets are provided in splices.	
3.	Plate bearing of size 400X650 is used along with the location strips, bed plate 550X800	
4.	Weight of girder is 16.005t	
5.	R.L. to bottom of girder=1097mm	

6. Precautions to be taken while Temporary Arrangement is in Track

(a) The arrangement shall be provided as per the drawings. Notes in drawings shall be read carefully before start of work.

(b) It shall be ensured that appropriate approval(s) have been taken before the arrangement is inserted in track. Work shall be planned such that the temporary arrangement is in track for least possible time.

(c) The first train shall be passed at '10 Kmph with stop dead, if required' after the official incharge has personally satisfied himself regarding the soundness and proper seating of the temporary arrangements. Subsequent train can be passed at 10Kmph (non-stop).

(d) Properly equipped gang shall man the site round the clock initially till the temporary arrangements stabilize. Packing(s) as required may be inserted under the wooden sleeper crib to maintain the longitudinal/cross levels. Speed on temporary arrangement shall be relaxed to 20 Kmph (Non-stop) only after arrangement has stabilized.

(e) Even after the temporary arrangement has stabilized, round the clock watch by staff having his flags/lamps shall be kept. Regular watch on longitudinal/cross levels shall be kept.

(f) To relax speed to 30 kmph, the following additional conditions must be fulfilled:

- The Berm around the abutment shall be more than 60cm wide as against 30 cm minimum given in drawing no. B-1484/4R.
- No water shall be there above the top of boulders in the piers and no rainfall shall have occurred within 48 hours prior to the day on which speed of 30 kmph is permitted.

(g) If moderate or heavier rainfall comes the following

action shall be taken:

- Speed on temporary arrangements shall be reduced to 20 kmph (non-stop) or lower depending on the site conditions.
- The manning of site by trained official with properly equipped gang shall be ensured.
- The water level in stream shall be monitored continuously. Signs of scour that may affect the stability of the structure shall be closely monitored.
- If signs of settlements are there, additional boulders may be dumped downstream of the arrangements.
- As long as water is there, officers related to the work/section shall visit the site at an increased frequency.

(h) Before use of the girder for any work, the following shall be checked/ensured:

- That the assembly of girder leaves has been done properly (Diagonal dimensions shall be measured and levels shall be taken at four ends for this).
- That bolts have been provided and tightened properly.
- That the girders and its components are not excessively corroded.

(I) The girders when not in use in track, shall be kept properly on wooden packing over ground/crib staging sufficiently away from ground so that the rain splashes, soil, vegetation,etc. do not corrode the girder components and shall be provided with long life paints including metallising during initial fabrication and subsequently when signs of corrosion appear.

(j) The rail joint at temporary piers shall be avoided and shall be minimum 3m away from the center line of pier/abutment.

7. Conclusions:

The new drawings of temporary arrangements incorporate several innovative features. The emphasis while preparing the drawings has been on “Practicality”, “Ease of use”, “Higher speeds” and “Suitability for multiple line applications”. While the new drawings address many of the practical issues faced with the old drawings, some issues might still be there. Any suggestions for improving the drawings further may kindly be sent by e-mail to RDSO at directorsteel2@gmail.com.

8. Further Improvements Required:

Some improvements to the new drawings already identified are:

(a) Suitable alternate material to the wooden sleepers/blocks is required as wooden sleepers are not readily available.

(b) Use of aluminum/alloys/stainless steel etc. for fabrication of girders can be explored for reducing the weight of the girder to make launching easier.

(c) C.C. cribs need to be redesigned as the shape of existing c c crib can be optimized.

◆◆◆

Traditionally, the bridges on River Ganges (Mahatma Gadhi Setu & Vikrmshila Bridge) and Brahmputra (Kalia Bhomra), the superstructure was cast-in-situ pre-stressed concrete balanced cantilever construction. With bridge contract being awarded on design-build and concession delivery models, agencies are bringing new solutions to reduce construction times from decade to few years. Similarly drilled shafts are being used for the foundations in place of well sinking, which is time consuming and has its own set of execution problems.

On the new Ganges River Bridge project between Bhatiarpur and Shahpur, which is being delivered through a BOT contract, concessionaire NECL requested that infinity engineering develop an alternative concept aimed at reducing the construction time. A lightweight concept was proposed, consisting of an incrementally-launched composite steel box which was made extra dosed in the 2.4 km long navigation section. The superstructure had five continuous units integral with the substructure that consisted of double-bladed piers. Though this was having shortest construction time, it was expensive. Ultimately a precast segmental variable depth superstructure founded on drilled shafts was selected for construction due to having the lowest predicted cost.

Similarly multi-span bridges with extra dosed superstructures are being planned for crossing on similar rivers such as the upcoming bridge over Narmada River in Gujarat to be constructed by Hindustan Construction Company.

Ref : Bridge Design & Engineering, Issue No. 69, Fourth Quarter 2012, Page : 42-43

Commercial Development of Railway Land

By
Rajesh Agrawal*

SYNOPSIS

Paper attempts to review the strategies adopted so far on Rail Land Development Authority (RLDA) for realising the revenues through the commercial exploitation of Railway land. Despite the sector being promising, the revenue realised in the last 6 years of existence is Rs. 709 crores out of a total accepted Lease Premium of Rs. 1706 crores. This calls for introspection and improvement to the strategies adopted so far so that more revenue can be realised every year. Accordingly, paper identifies the lessons learnt from the practices of the past and suggests a road map to be followed to develop in-house capacity to generate revenues from any given land parcel within 1 to 2 year of its entrustment to the Authority.

1.0 Introduction

1.1 In the context of reduced budgetary support and high cost of market borrowing, Railways have been considering raising of revenues through non tariff measures by commercial exploitation of land / air space for the last more than three decades.

1.2 Considering the preoccupation of Zonal Railways in running of trains, it was decided to set up a separate authority namely the Rail Land Development Authority through an amendment to Railways Act, 1989 to undertake all tasks related to property development on railways land under the control of Ministry of Railways. Railway amendment Bill was passed by Rajya Sabha and Lok Sabha after incorporating amendments in Aug'2005. Railways (Amendment) Act 2005 was notified in Sep'2005 after approval of Parliament and President's assent. Ministry of Railways framed and notified on 4th Jan 2007 the RLDA (Constitution) Rules.The first Authority became functional since January 2007.

1.3 Thus with above amendment to the Railways Act, following two objectives were achieved:

(a)The amendment by insertion of Chapter-IIA to the Act paved the way for establishment of Rail Land Development Authority to exercise the powers and discharge the functions conferred on it by the Act for development of Railway land for commercial use for generating revenue by non-tariff measures.

(b) By amendment to Section 11 of the Act under new Clause (da), the Railways got the statutory powers for developing any railway land for commercial use.

2.0 Working Principles For The Authority

2.1 As per RLDA (Constitution) Rules 2007, the Authority shall not take up commercial development of Railway land or air-space at any site unless specifically entrusted to it by the Central Government i.e. Ministry of Railways under clause (ii) of Sub-Section (2) of Section 4D of the Act.

2.2 For this purpose, potential sites for commercial

* CE/PL/WCR Course No. 13202, SAG refresher

utilisation shall be identified either by Central government or by the Authority and if the same is not required for operational purposes or future expansion, it can be entrusted.

After the site has been assigned / entrusted, the Authority shall prepare scheme(s)for use of Railway land based on market survey to assess the revenue potential. The plans may be with or without construction or redevelopment or modification of Railway station building and / or yards.

2.3 In case the scheme involves any redevelopment, the detailed plans for such development shall be got approved by a committee consisting of one Nodal Officer each from Authority and Railway administration.

Thereafter Developer will be finalised through transparent, open, fair and competitive bidding process and all the earnings realised will go to the Central govt.

2.4 Based on the mandate given by the Act and the Rules notified there under, Railway Board vide letter No. 2008/LML/2/17 dt. 28.04.2009 has issued general instructions detailing procedure with regard to duties / responsibilities of Zonal Railways.

3.0 Issues For Land Development

3.1 Sale Vs. Leasing of Land

Government of India constituted Committee on Allocation of Natural Resources (CANR)to examine the approach to allocate natural resources such as land, coal, mineral etc whose recommendation in respect of Land disposal is as following:-

3.1.1 Recommendation No.57 says that all the Union Govt. departments or organizations may need to ensure that these land resources are put to their optimum use by striving for not only using the maximum permissible FAR available but also the most optimum land use. This may generate the surplus land resources for other alternative uses by the government to the benefit of the country.

3.1.2 Recommendation No.59 stated that it may be preferable to have a policy for outright sale of land, unless there are legal constraints on account of original terms of allotment, rather than a long term lease arrangement which is difficult to resile or cancel when the lease tenure is about to come to an end.

Railway land was primarily acquired for the purpose of transportation and amendment to Railway Act permits development of Railway land for commercial use. Further original terms of allotment, in most of the cases do not permit an outright sale. Thus the RLDA has so far followed the policy of long term leasing of land.

3.2 Approval of plans of commercial development by local authorities

3.2.1 Railways Practices for taking up building construction

Initially, in the light of Railways (Amendment) Act 2005, there was a view that the plans for commercial development are not required to be approved by the local authorities as this has been included in Section 11 of Railway Act 1989.

The above view emanated from paragraph 201 of Indian Railway Works Manual 2000 which states that Section 11 of Railways Act 1989 and Government building Act No. IV r/w Section 291 of the cantonment Act provides for the right to erect buildings on their own land by Railways without having to obtain sanction of the Municipal or Cantonment Authority in whose area the site is situated.

However, the same para also states that in Urban areas the urban Development Authority must be consulted and rules framed by them followed. Municipal or local Authorities may however be consulted, where appropriate, regarding water connection, sewer lines, sewage disposal and similar matters.

Further it is stated that notwithstanding the fact that the building bylaws are not applicable for the railway buildings, it would be in the common interest to adopt such bylaws and in areas where bylaws are not notified, it will be desirable to adopt the provisions of National Building Code (NBC).

The fact that the Central govt. can entrust any land parcel only after ensuring that the same is not required for operational purposes or future expansion, it is not possible to classify any of the Development undertaken as operational or required for railway use.Thus approval of building plan needs to be obtained.

3.2.2 Constitutional provisions: Layout/Building plan approval requirement

Land is the state subject in seventh schedule of constitution where only state assembly can make a law. In view of above Central Town and Country

Planning organization drafted a Model Town and Regional planning and development Law in 1953.On this basis, State Town and Country Planning Acts (T&C P Act) were enacted by various State Governments.

Most of the states town and country planning act are having almost similar provision for the approval of Govt.(Central, state and Local) Building. Generally, Operational buildings of Govt Department are exempted from the building Plan approval process. However, enactment of T&C P Act gave boost to the preparation of Master Plans for fast growing cities. Master Plan of more than 1000 towns has already been prepared under the state T&CP Act. Their provision needs to be honoured.

Further the 74 th Amendment to the Constitution added Article 243P to 243Z to strengthen the rural and Urban Local Bodies of India and their functions were also specified in Schedule XI and XII. Under these schedules, Urban planning including town planning and Regulation of land-use and construction of buildings are the basic function of a Urban Local Body (ULB). Thereafter ULBs have to play effective role in enforcing the Master Plan for orderly development of Towns.

3.2.3 General Process of Planned Development

Normally, State governments entrusts the task of preparation of the Master Plan to development authorities. Approval of the Master Plan is processed and arranged by Town & Country Planning Deptt. of the concerned State govt. Responsibility of implementation of Master Plan is either with the development authorities or ULBs.

Development authorities/ULBs in turn specify the development control norms, monitors the use of land as per the provisions of the Master Plan and make regulations for change of land use required if any and are entitled to collect development, conversion and other charges.

Thereafter individual building plans are approved by local authorities as per building byelaws which interalia include availability of undisputed land title records, compliance to development control norms and Master Plan provisions. The requisite fees for approval of the plan are deposited with local bodies which are shared between local bodies, development authorities and State govt.

3.3 Land use for Railway Land

State govt. / development authorities have invariably left the land under Railways in the Master Plan without specifying any land use or have stated Railways which they classify under the broader head of “transportation”. Thus if any development other than “transportation” needs to be undertaken, change of Land-Use would be needed. Whereas if Railways administration put in their representation at the time of development of Master Plan, the requisite land use can be specified at that stage itself without much difficulty.

Railway representative in the committee responsible for development of Master Plan need to be proactive during the process of development of Master Plan of any city/area and get their lands classified as per the future planning of Railways. For this purpose, a consolidated proposal of all of its land in any given City specifying different uses like transportation, Residential, commercial, Institutional, Industrial or Mixed use etc needs to prepared and Development Authorities / State Governments can be convinced to incorporate in the respective Master Plans.

4.0 Brief Status Of Commercial Development Of Sites

4.1 Entrustment:

So far Railway Board had entrusted 145 sites to RLDA for undertaking commercial development.However, Zonal Railways requested to withdraw9 sites due to their own requirement. Same were agreed and Board de-entrusted the same. As on date 136 sites are available with RLDA for development.

Based on consultancy studies/preliminary inspections, 47 sites were found to have problems of encroachments, low potential etc. and therefore, were proposed for de-entrustment.

4.2 Consultancy Contracts:

Site specific Consultancy contracts covering the scope from undertaking the feasibility studies upto signing of the Development Agreement were fixed for about 100 sites. Majority of site specific consultancy was awarded in various lots in the year 2007-08 and 2008-09. The year wise expenditure against the accounting head, “Professional Charges & Consultancy Expenditure” are as below:

Year	Payment	Year	Payment
2007-08	210 lakhs	2010-11	89 lakhs
2008-09	159 lakhs	2011-12	78 lakhs
2009-10	30 lakhs	2012-13	31 lakhs

From the payments made, it is evident that these consultancies progressed initially and then got stuck. Consultancy contracts could not execute their full scope because of variety of issues faced at the individual site rendering these sites not fit for commercial development.

The overview of Consultancy contracts are as under:

(i) Only 4 consultancy contracts w.r.t. site of Gwalior, Bangalore, Gaya and Delhi Sarai Rohilla could achieve full scope of work i.e. upto signing of Development Agreement.

(ii) Final report could be drawn in case of 28 sites only. Out of which Developer could be fixed in four cases, consultancy contracts were short closed for 18 sites and remaining contract is alive in a hope to move further in near future.

(iii) Consultancy was short closed for about 63 sites at draft report/final report stage itself as the sites were not amenable for commercial development in the near future due to problems of land records, non-availability of land use, heavy encroachments, high site surrounding development cost, poor location and/or poor revenue potential etc.

(iv) Due to shortclosure, an expenditure of about Rs. 2.19 cr. including tax (Rs. 1.95 cr. without tax) had been incurred as against a contractual value of Rs. 4.54 cr. and thereby making a saving of about 55%.

(v) Consultancy contract is in progress for about 34 sites. The further progress is hampered due to delay in timeline of these contracts. Consultants are demanding variation especially wherever rebidding or reassessment of Revenue potential is involved.

4.3 Master Planning Consultancy:

In view of the above, the scope of further consultancy contracts for bigger sites has been restricted upto Master Planning stage. During this process due diligence of land records, land use & subdivision requirement is taken care of. The local architects facilitate in obtaining approval of plans for the development from the local authorities.

Delhi Cantonment Board had approved plan for Parcel-A at Brar Square & that of Bhillai Marshalling Yard (BMY), Raipur has been submitted. For Sahmatganj, Bareilly plan has been prepared & will be submitted to Development Authority after proper land records is arranged.With this exercise, RLDA will be on strong footing to carry out the development work either by itself or by fixing the Developer.

4.4 Status of bids invited and signing of Development Agreement:

So far bids were invited for 12 sites only. The status is as under:

SN	Name of Site	Area (Ha)	Premium (*) & Potential In Rs Cr	Status
1	Gola Ka Mandir, Gwalior	**1.32**	**26.24***	DA signed. Building plan not submitted. Govt.of MP forcibly took over part of site resulting into court case.
2	Ambedkar Circle, Vishakhapatanm	**0.15**	**12.51**	After issue of LOA, premium not deposited. LOA terminated & bid security forfeited.
3	Delhi Sarai Rohilla	**15.27**	**1651.51***	After issue of LOA premium not deposited. LOA terminated & bid security/interest forfeited. Re-invited and LOA issued. 2 instalments received. DA signed after compliance to pre-requisites on 31.05.2013.
4	Platform Road, Bangalore	**1.01**	**27.90***	DA signed. Building plans under approval. Arbitration on demand by Developer granted and under progress.
5	Padi, Chennai	**2.2**	**38**	Bid invited. No response received due to the issues of OSR and land exchange with TVS

				Lucas. Not re-invited for want of unfavourable market conditions.
6	Vijayawada, A.P.	**0.13**	**6.10**	LOA issued. Notification for Land use change also issued. LOA cancelled due to delay occurring on account of restrictions on long term leasing of land.
7	Gautam Budh Institute, Gaya	**0.58**	**1.855***	LOA issued. DA signed. Building plans under approval. Construction not yet started.
8	Part of Old ITDC Hotel, Aurangabad	**3.09**	**43.35**	Bid invited & discharged due to change in valuation of land during the intervening period of restrictions on long term leasing of land.
9	Jamnagar, Gujarat	**2.14**	**42**	Bidders prequalified. Financial Bid not invited for want of undisputed land title record.
10	Bandra, Mumbai	**4.5**	**2600**	Bid discharged for want of proper land records.
11	Darjiling more - Siliguri	**0.83**	**--**	Bid invited but was not opened due to administrative reasons.
12	Land Parcel A - Katra	**1.53**	**18**	Bid invited but no response received. Consultancy contract terminated.

4.5 Site wise Revenue / earning realised so far is as under:

SN	Site Name	Area (Ha)	Accepted Lease Premium(In Crores)	Earning from Lease Premium in Upto 31.03.2013 (In Crores)
1.	Gola Ka Mandir, Gwalior	**1.32**	**26.24**	**26.24**
2.	Platform Road, Bangalore	**1.01**	**27.9**	**15.3729**
3.	GautamBudh Institute, Gaya	**0.5790**	**1.855**	**1.796597**
4.	SaraiRohilla, Delhi	**15.27**	**1651.51**	**665.8025**
			Total	**709.211997**

5.0 Lessons Learnt

During the last decade, private sector made substantial progress despite the sub-prime crisis period of 2008. The revenue realised by RLDA through commercial development of Railway land since 2008 is Rs. 709 Cr. out of an accepted lease premium of 1707 Cr. which cannot be considered satisfactory. With such growth in the real estate sector, the performance achieved during the last five years, definitely requires intro-inspection to find out the lapses and the reasons thereof.

5.1 Site Specific Consultancy:

For undertaking feasibility studies to fixing of Developer for individual site,number of consultancies was awarded. As a result limited resource of RLDA was used in

(i) framing Terms of Reference (TOR) for individual site,

(ii) tender process leading to award of consultancy contracts,

(iii) Post award consultancy monitoring and contract management etc.

Further, various consultants have had different approaches, assumptions, system of valuations and mobilise different experts (due to attritions) over a period of time. To bring them at par in deciding the valuation of various sites is work in itself. This process consumed substantial resources without achieving any tangible final results i.e. fixing of Developer and realisation of money.

Further any held up in finalising consultancy report and invitation of bid has necessitated reassessment of revenue potential. This exercise called for putting additional resources by the consultants for which no compensations were available to the consultants in

the contract leading to lukewarm response to such a request of RLDA.

5.2 Site Land Records:

After consultancy reports were finalised, tender process for fixing of Developer has either been initiated or finalised without addressing following issues:

(I) Non-availability of proper land title records for the subject site.

(ii) Sub-division of land parcel not undertaken for the subject site.

(iii) Change of land use for the subject site not undertaken.

(iv) Broad layout of proposed development not submitted to local bodies.

This has been done assuming that the 'would be Developer' will take care of these requirements. Though the assumption was partly true but has put enormous risk on RLDA.

Being a public authority, availability of undisputed land title record and proper land use commensurate to the proposed development remains part of RLDAs representations and warranties. With this approach, RLDA has left its developer to the mercy of local authorities /State Government.

Secondly,It has provided a discretion to the developer to either take up the project (if remain attractive) or put the onus of failure on RLDA and seek compensation for infructuous expenditure on desgn, planning, liasioning, idling charges etc and / or loss of opportunity cost etc through arbitration/court.

5.3 Focussing Big Sites

Since beginning, the focus was on two sites of Delhi Sarai Rohilla and Bandra, Mumbai which put together have more than 75% of total potential. Being high value sites, any mistake would have resulted into huge financial implicationswhich have made the learning difficult. Thus all the resources of RLDA were concentrated on these two sites. As a result, other sites of medium & smaller values were remained in the background. While in monetary terms, this strategy may be appropriate but was totally inadequate in terms of

(i) learning through mistake from development of smaller sites,

(ii) Developing pan-India rapport with Zonal Railways, Divisions, State Govt. and Urban Local Bodies.

Development of smaller sites at first place would have provided a good learning platform for various development models and attracted lesser eye balls on the mistakes due to smaller financial implications.

5.4 Hands-off Approach

RLDA followed hands-off policy for the commercial development of land i.e. the entire process of obtaining statutory approvals for the proposed development to construction; marketing and asset management is to be done by the Developer.

No development whether small or big has been undertaken by RLDA itself. Thus the RLDA did not have an experience of the trade either as a organization or as a group of experts. Undertaking a project by itself would have provided a run through experience leading to learning in terms of difficulties, pitfalls and areas of windfall gain etc. in such a projects.

This experience would have been of immense importance in allocating risk to various stakeholders who were better placed to handle the same. This would have given a clear idea about the approval process. Further it would have helped that to what extent approval needs to be arranged by RLDA and from where the responsibility can be shifted to the Developer.

Developing a project by itself would have given a hands-on experience to RLDA officials. This would have resulted in capacity building of the individuals apart from providing a good platform to check the assumptions made by the various consultants in their reports.

6. Future Road Map

6.1 Appointing General Consultants

Instead of managing many site specific consultancy contracts, a general consultant who will provide expert resource personnel to work at RLDA premises as per man-month rate should be fixed. This system will put the limited resource and energy of RLDA officials in more productive form due to following advantages over the existing practice of site specific consultancy contracts:

6.1.1 Will avoid multiple contract handling and short closure of site consultancies.

6.1.2 As day-to-day work will be as per the directions of RLDA, Resource personals will work as per priority of the day without contractual complications.

6.1.3 RLDA personnel can be seconded to work with the experts to acquire necessary expertise for future.

6.1.4 It will provide continuity in approaches, assumptions and will become free from the problems associated with different consultants and their personnel. The RLDA officials will be relatively free from unproductive desk work of consultancy monitoring and in bringing the various reports at par.

6.1.5 RLDA officials will effectively utilise their time for liaisoning with the State Govt/Local Bodies in obtaining statutory approvals, arranging revenue records, change of land use and disseminating information about Land Due Diligence in Zonal Railways etc.

6.2 Arranging Land Records:

Availability of proper land title records before invitation of tender is an inescapable requirement and cannot be left to the 'would be Developer'.

A proper land title record is one which corresponds to the subject site and the subject site only. The measurement at site including description of four boundaries must match exactly with the measurement and description of boundaries as provided in the revenue records. For this purpose, entire chain of succession of land has to be well established to defend any future court cases and to avoid litigation and payment of compensation etc. in future. Any lapse on this front may tantamount in committing fraud by the public authority in the eyes of law. Thus a strong set up for undertaking this task within the organisation is an absolute must which is almost nonexistent at present.

Though the Railway Board letter dt. 28.04.2009 put the onus of providing unimpaired title of land, land title records, plans, mutation in revenue/municipal records in favour of the Railways with Zonal Railway; it is an area which is neglected at present in the Zonal Railways also.

Whenever a land parcel is entrusted to RLDA, Railways are generally unable to provide proper revenue records. Thus, RLDA need to supplement the effort of Railways in arranging proper revenue record, in establishing complete chain of succession of land and land title search report. Further the subject land parcel need to be sub divided to make it site specific. Lastly the land use of the subject site parcel have to commensurate with the proposed development and for this purpose, necessary action for getting change of land use has to be taken up by RLDA.

6.3 Focus smaller sites:

Time frame for generating the revenue from a given land parcel needs to be dovetailed with the psychology of the Railway set up. The co-operation of Zonal Railways, particularly of GM & DRMs (answerable for earnings) is essential who have tenure of about 2 years. Therefore it is attractive to them only if a land parcel (once offered for commercial development) generates cash within one-two year.

Thus the entire process needs to be designed to ensure that a land parcel once entrusted starts generating cash within one year. For this purpose, the strategy should be to focus few sites of smaller value across each division of the Indian Railways. This will achieve following:

6.3.1 It will help learning the different system being followed by different State Govt. and their urban local bodies.

6.3.2 It will generate a good rapport with all the divisions of the Railways as well as with the concerned local authorities.

6.3.3 Even considering low success rate, one site worth Rs. 10 Crores per division per year can still be achieved which will give an overall revenue generation of about Rs. 600-700 crores per year.

6.3.4 It will provide a good opportunity to test different models of development with least risk to Railways and help in firming up a standard model of development for future.

6.3.5 Based upon the good practices, learnt from above, higher realisation from high value sites can be obtained which will be more rewarding.

Once the expertise is developed within RLDA, it can be imitated in the land cells of respective Zonal Railways. For this purpose, RLDA officials can educate the officials of Railways setup. Through this, RLDA can impress that the early cash generation is possible if the railways take the lead in bridging the deficiencies of present status of land records.It will motivate DRMs/GMs to give more attention to this neglected area of land records.

6.4 Follow Hands-On Approach:

6.4.1 Master Planning of Sites:

Development authorities all over the country prepare a Master plan for the city and phase the development over a period of time. The development scheme whether commercial or residential are offered to public in parts. Similarly, wherever study shows that an entrusted land

parcel is not absorbable as a whole by the market immediately, it is advisable to develop the master plan for the subject site and obtain the layout approval from the local bodies.

In this concept, the entire land parcel is planned and sub divided for different uses keeping in mind the short term and long term market demand for commercial, institutional, residential and industrial uses.

Thereafter few plots based upon immediate absorption capacity can be taken up through bidding process to test the market. With every successful bid, the valuation of remaining land parcel will only enhance and will become source of higher earnings in future.

6.4.2 Redevelopment of colonies in parts

The existing railway colonies are generally located in the well developed area of city. The colonies are generally 1-3 stories structure with inefficiently spread development of staff quarters. These quarters can be redeveloped at an alternative plot of land in a multi-storeyed format as per the prevailing development control norms. Due to complete utilization of FAR available with least ground coverage, plot area required will be least. Thus, the redevelopment of quarter will release substantial plot for undertaking other developments which is in line with the recommendation of CANR and has a huge potential of revenue generation. Such locations should be taken up in two parts.

In the first part, the colony should be redeveloped on'no-profit no-loss' consideration i.e. only the least required land parcel should be offered for commercial development which would suffice the funding requirement for undertaking the redevelopment project. This will facilitate parallel execution of the development project of the Developer and the redevelopment project of colony development.

In the second part, the remaining land parcel which will be totally free from encumbrances can be taken up for commercial development. There may or may not be commercial development at the adjoining location in phase-1 but the risk of redevelopment on to the main project is definitely segregated and will have appreciation of land price during the intervening period.

In this approach second part can also be taken up in phases with a view to maximize returns based upon demand and market absorption capacity.

6.4.3 Undertaking Commercial development

The best way to learn is to do by itself. This method helps in understanding the nitty-gritty of the subject in the most expeditious way. Undertaking the commercial development in joint venture with any of the development authorities will give the needed exposure to railway officials about the fundamentals. Initially, the systems and procedures followed by the collaborating development authorities can be adopted. This will obviate the need for developing documents at the initial stage. Based on experience, standard documentation can be developed.

In case the above approach does not materialize, few smaller sites can be taken up in collaboration with Railway PSUs who can provide the fund for undertaking the development. Apart from making use of construction expertise of the RLDA officials, taking up the development will expose them to learn the trade, practices followed in the market and also the process of obtaining approval of building plans etc.

Such an experience will bring awareness about the provisions of T&CP Act, importance of undisputed land title records and awareness on development control norms, master plan provisions and requirement of change of land use etc. This will generate confidence among the officials and will help in developing standard conditions of contract for future development to be undertaken by the Developers.

The purpose of future road map is to generate in house capability for undertaking land due diligence, master planning, developing standard conditions of contract, expeditious form of tender process and manage the site after award in such a manner that the organization is known for providing a steady flow of revenue to Railways of the order of Rs 1000 Cr on yearly basis and is capable of generating cash from any land parcel within 1 to 2 years of its entrustment.

References

1. Amendment to The Railway Act, 1989 Chapter-IIA
2. Amendment in Chapter-IV, The Railway Act, 1989 for developing any Railway Land for Commercial use
3. Railway Boards letter 2008/LML/2/17 dated 28.04.2009 regarding General Instructions to Railways on Commercial development of Railway land
4. Para 201 of IR Works Manual on need of Approval of Building Plan from local bodies
5. Provision of UP Urban Planning and Development Act in respect of Government Buiding Approval process
6. Provision in Building Byelaws of Municipal Corporation of Greater Mumbai for Development, permission and commencement certificate : list of operational constructions-exemptions thereof.

◆◆◆

Earthquake Design Aspects of Buildings - Codal Provisions

By
Devendra D. Nagpure*

SYNOPSIS

In the past, several earthquakes had occurred in India. During earthquake, ground vibrations cause forces and movements of structures. This necessitates seismic analysis and earthquake resistant structures to avoid loss of life and utilities. There are several Indian seismic codes for various structures. Most of buildings on Indian Railways are simple, regular and low height RCC structures. An attempt is made to illustrate salient historical features and main provisions of three Codes- IS 1893, IS 19320 and IS 4326. Based on these codes, design experience of G+2 RCC structure constructed in S. C. Railway is presented. With this limited design exposure, it is concluded that seismic analysis leads into heavier and uneconomical sections. Hence, it is recommended to adopt seismic modifications in detailing of reinforcements with conventional limit state analysis for simple and regular structures.

General

Over the past century, several devastating earthquakes of the world had occurred in and around India. Few of these occurred in cities and towns and caused severe damages to human lives as well as to infrastructures. Most of these earthquakes had epicenters in the Himyalayan region and some earthquakes have also taken place in Indian Penisula and in the Runn of Kutch. These earthquakes are listed as:

Date	Event	Time	Magnitude	Max.Intensity	Deaths
16 June 1819	Kutch	11:00	8.3	VIII	1500
12 June 1897	Assam	17:11	8.7	XII	1,500
8 Feb. 1900	Coimbatore	3:11	6.0	X	Nil
4 Apr. 1905	Kangra	6:20	8.6	X	19,000
15-Jan-34	Bihar-Nepal	14:13	8.4	X	11,000
31-Mar-35	Quetta	3:03	7.6	X	10,000
15-Aug-50	Assam	19:31	8.5	X	1,530
21-Jul-56	Anjar	21:02	7.0	IX	115
10-Dec-67	Koyna	4:30	6.5	VIII	200
23-Mar-70	Bharuch	20:56	5.4	VII	30
21-Aug-81	Bihar-Nepal	4:39	6.6	IX	1,004
20-Oct-91	Uttarkashi	2:53	6.6	IX	768
30-Sep-93	Killari	3:53	6.4	IX	7928
22-Mar-97	Jabalpur	4:22	6.0	VIII	38
29-Mar-99	Chamoli	12:35	6.6	VIII	63
26-Jan-01	Bhuj	8:46	7.7	X	13,805

* *Secy to PCE/S.C.Rly, Secundrabad*
Course No. 13206, Sr. Professional development

During earthquake, large strain energy is released and it travels as seismic waves in all directions through earth's layers. Some of transmitted energy is reflected back, most goes into heat and fracturing the rocks and remaining small fraction causes shaking of ground and hence damage to structures.

Importance of Seismic Design Codes

Ground vibrations during earthquakes cause forces and deformations in structures. Structures need to be designed to withstand such forces and deformations. Seismic codes help to improve the behavior of structures so that they may withstand the earthquake effects without significant loss of life and property. Countries around the world have procedures outlined in seismic codes to help design engineers in the planning, designing, detailing and constructing of structures. An earthquake-resistant building has four virtues in it, namely:

(a) Good Structural Configuration: Its size, shape and structural system carrying loads are such that they ensure a direct and smooth flow of inertia forces to the ground.

(b) Lateral Strength: The maximum lateral (horizontal) force that it can resist is such that the damage induced in it does not result in collapse.

(c) Adequate Stiffness: Its lateral load resisting system is such that the earthquake-induced deformations in it do not damage its contents under low-to moderate shaking.

(d) Ductility: Its capacity to undergo large deformations under severe earthquake shaking even after yielding, is improved by favorable design and detailing strategies.

Indian Seismic Codes

Seismic codes are unique to a particular region or country. They take into account the local seismology, accepted level of seismic risk, building typologies, and materials and methods used in construction. Further, they are indicative of the level of progress a country has made in the field of earthquake engineering.

Development of building codes in India started rather early. Today, India has a fairly good range of seismic codes covering a variety of structures, from low strength masonry houses to high strength modern buildings. These are:

1) IS 1893 (Part I), 2002, Indian Standard Criteria for Earthquake Resistant Design of Structures (5th Revision)
2) IS 4326, 1993, Indian Standard Code of Practice for Earthquake Resistant Design and Construction of Buildings (2nd Revision)
3) IS 13827, 1993, Indian Standard Guidelines for Improving Earthquake Resistance of Earthen Buildings
4) IS 13828, 1993, Indian Standard Guidelines for Improving Earthquake Resistance of Low Strength Masonry Buildings
5) IS 13920, 1993, Indian Standard Code of Practice for Ductile Detailing of Reinforced Concrete Structures Subjected to Seismic Forces

The regulations in these standards do not ensure that structures suffer no damage during earthquake of all magnitudes. But, to the extent possible, they ensure that structures are able to respond to earthquake shakings of moderate intensities without structural damage and of heavy intensities without total collapse. As majority of structures being built are RCC buildings, scope of present work is restricted to only three seismic codes –IS1893, IS 4326 and IS 13920. Historical developments of these codes and main design recommendations for simple, regular structures are discussed.

IS1893 (Part I)- 2002 (5th Revision)

This is first formal seismic code of India published in 1962. This code was subsequently revised in 1966, 1970, 1975, 1984 & 2002. This code depicts seismic zone map and presents the methodology for estimation of seismic forces.

The Geological Survey of India (GSI) first came up with the national seismic hazard map of India in 1935 after the 1934 Bihar-Nepal earthquake. The Bureau of Indian Standards published the seismic zonation map of India as part of IS-1893-1962 based on earthquake epicenters and the isoseismal map published by the GSI. The earthquakes of magnitude 5 and above with maximum Modified Mercalli Intensity (MMI) scale ranging from V to IX were considered. In the first zoning exercise, to present historical picture of the severity of seismicity of a region in zoning map, the Himalaya and northeast India were graded into zones VII-IV, and the Deccan Plateau was marked as zone zero (1966). After the 1967 Koyna earthquake, the necessity arose to review the zoning, particularly in the Deccan Plateau. Several updated geological, geophysical and seismological information were considered. The zone map went through a major revision (IS: 1893-1970). It reduced the number of zones from seven to five (I to V).

Occurrence of the 1993 Killari, the 1997 Jabalpur and the 2001 Bhuj earthquakes necessitated a drastic review of the seismic zoning map of the country. In the 5 th Revision of 2002, Zones I and II were combined as Zone II and total number of zones were further reduced from 5 to 4 (II to V). These modified seismic zones are depicted as

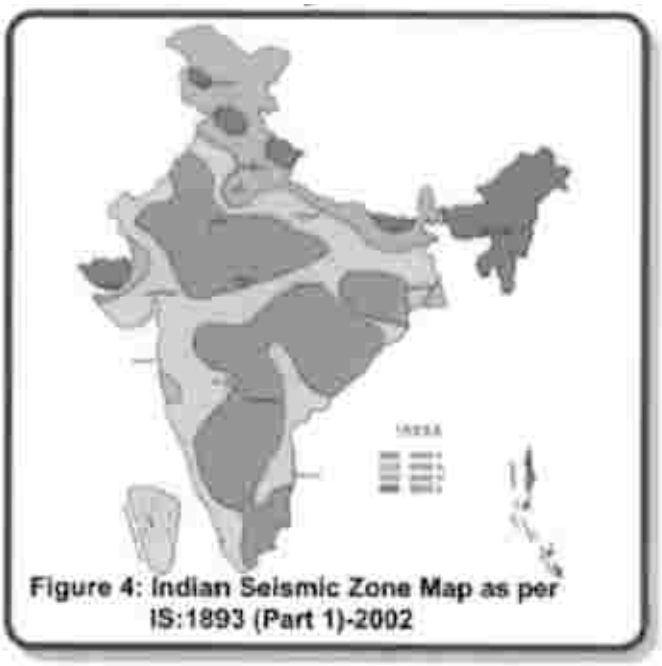

Figure 4: Indian Seismic Zone Map as per IS:1893 (Part 1)-2002

Moreover, IS 1893 :: 2002 is divided in Five Parts as-

1) General & Buildings – Published in 2002
2) Tanks (Elevated & Ground) – under revision
3) Bridges & R/Walls– under revision -
4) Industrial Structures– Published in 2005
5) Dams & Embankments– under revision

This code is for normal structures and addresses only inertia forces due to seismic vibrations. The Site specific seismic response involves separate study. Further, other factors such as- Liquefaction, landslides, fire, floods, etc. are not considered in IS-1893.

Characteristics of any seismic vibrations depend upon several factors like – Epicenter, Magnitude, distance, path, strata of foundation. Response of structure corresponding to an earthquake varies as per nature of foundation soil, materials used in construction, form of structure, size and mode of structure, duration and characteristics of ground motion.

Design philosophy adopted in IS 1893-2002 is to ensure that structure will posse minimum strength to withstand minor EQ, resist moderate EQ without significant damage and withstand major EQ without the complete collapse. Hence, Design Base EQ force (DBQ) is taken as 50 % of the maximum Considered EQ force (MCQ). The code suggests designers to rely upon ductility, detailing & over-strength of the structure.

Assumptions considered in IS 1893 are – (i) Resonance will not occur; (ii) Earthquake will not occur simultaneously with wind, max flood or max sea waves; and (iii) Modulus of elasticity is same as in static analysis.

IS-1893 specifies to consider mainly 4 load combinations as:

1) 1.5 (DL + IL)
2) 1.2 (DL + IL ± EL)
3) 1.5 (DL ± EL)
4) 0.9 DL ± 1.5 EL

Last combination takes into account reduction in gravity forces during upward ground motion. Earthquake forces can be resolved into three components – Elx, Ely and Elz. For biaxial symmetrical structures, earthquake forces are considered in only two dimensions, resulting in total of 13 load combinations and for non-symmetrical designs, one has to consider total of 25 load combinations. Code allows for necessary increase in permissible stresses of materials.

There are two methods of analysis while designing for seismic forces. In first method, only single mode of vibration is considered as buildings are relatively simple and regular in shape. This method is known as Static Analysis or Seismic Coefficient Method. Code presents methodology for this method based on Design Spectrum.

Another approach involves multi-modes of dynamics as evident from multistoried and /or irregular, complex structure. This method termed as Dynamic Analysis. IS-1893 presents the guidelines for both- Response Spectrum, based on site specific conditions and for Time History method. Code specifies when the Dynamic Method to be adopted by considering three parameters of a structure- location (zone), shape, and height. This is summarized as:

ZONE	Regular Building	Irregular Building
II and III	Height > 90 m	Height > 40 m
IV and V	Height > 40 m	Height > 12 m

Steps in Seismic Coefficient Analysis:

1. Determine Seismic Weight, W of given structure based on Dead Load and intensity of Live (Imposed) load.
2. Design Seismic Base Shear, VB= Ah * W where Ah is Design Horizontal Accerlation Spectrum.
3. Calculate Ah = (Z / 2) *(I/R) * (Sa/g)

3.1. Zonal Factor, Z :

Seismic Zone	II	III	IV	V
Z	0.10	0.16	0.24	0.36

3.2. Importance factor, I =1.5 for Important, Community & Lifeline Buildings and
=1.0 for other buildings

3.3. Response Reduction factor, R =3.0 for Ordinary Moment Resisting Frames (OMRF) and

=5.0 for Special Moment Resisting Frames (SMRF)

Depending upon type of structure, R ranges from 1.5 to 5.0.

3.4. Spectral Acceleration Coefficient, Sa/g depends upon Natural Period of Vibration, T of the structure.

3.4.1. Natural Period of Vibration, T depends upon geometry and nature of frames (with or without infills).

3.4.2. It can be calculated as:

- For frame buildings without brick infills

$T_a = 0.075h^{0.75}$

- For all other buildings, including frame buildings with brick infill panels:

$$T_a = \frac{0.09h}{\sqrt{d}}$$

where h is in meters

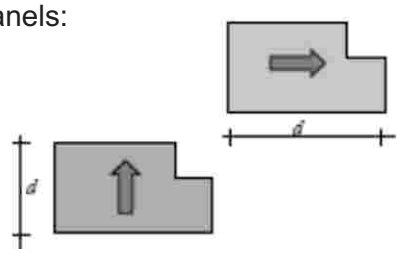

3.4.3. From type of foundation soil and Natural Period of Vibration, T value of Sa/g can be determined from graph given in IS 1893 :: 2002 (Part-1).

3.5. After knowing Sa/g, value of Ah can be determined from above mentioned formula and Design Base Shear can be computed.

4. Calculated Design Base Shear can be distributed along the height of building as

$$Q_i = V_B \frac{W_i h_i^2}{\sum_{j=1}^{n} W_j h_j^2}$$

where

Q_i = Design lateral force at floor i,

W_i = Seismic weight of floor i,

h_i = Height of floor i measured from base, and

n = Number of storeys in the building is the number of levels at which the masses are located.

5. Corresponding design for Shear Forces and Bending Moments can be done using IS-13920.

IS13920-1993

Several reinforced concrete multistoried buildings collapsed in the 2001 Bhuj earthquake. Major flaw was the concept of Strong beam-Weak column and soft storey effect. For RC structures, designed on basis of IS 456-2000, governing failure criteria is either flexure or serviceability. However, during seismic conditions, compression / shear failure occurs. This is due to inherent properties of concrete and steel and their individual crushing and yielding behaviors. IS 13920 takes into account these limitations and suggest guidelines to make ductile structures and precaution to have flexure preceding shear / compression. Further, it encourages confinement of concrete to attain higher strain levels in concrete.

Minimum grade of concrete is given as M20 and stipulates use of Fe415 or higher grade of steel with minimum 14.5% elongation. Calculation of design shear force and bending moments with factored seismic loads are illustrated with drawings in this code.

Important design features for flexural members are – (i) Factored axial stress not to exceed 0.1 fck; (ii) Width / depth ratio should be more than 0.3; (ii) Width should not less than 200 mm; (iv) Depth should not more than ¼ of clear span; (v) Min steel ratio = 0.24 $\sqrt{}$ (fck/ fy); and (vi) Max steel ratio = 2.5%. For a joint face, positive reinforcement should be atleast 50 % of negative steel so as to cater for reversal of stresses during earthquake. Further, Steel at top and bottom face anywhere should be at least 25% of max negative moment steel at face of either joint. This is due to reasons that actual moments away from joint may be higher than the design moment and large amount of steel should not be abruptly reduced away from the joint. At beam-column joint, sufficient anchorage of Ld + 10 db to be ensured. Further beam stirrups should have minimum projection length of 10 dia or 75 mm, whichever is maximum. This provision will ensure proper bonding of beam bars into concrete during stress reversal.

Fig. 1 Anchorageof Beam Bars in An External Joint

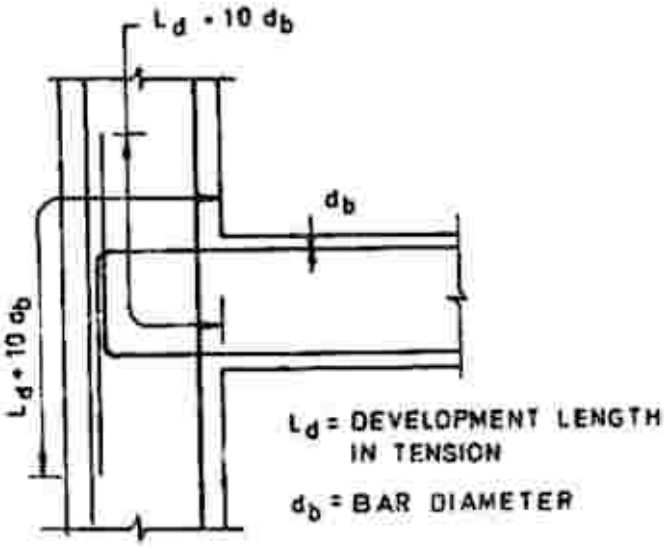

FIG 2 (a) Positive Reinforcement in beams

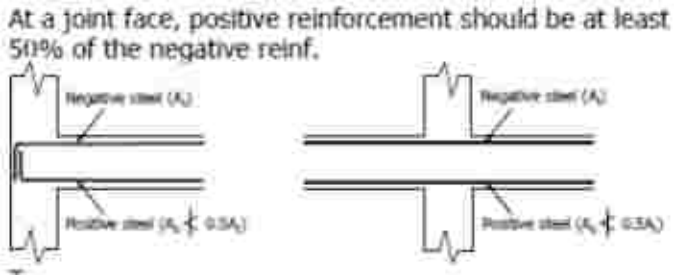

FIG 2 (b) Positive Reinforcement in beams

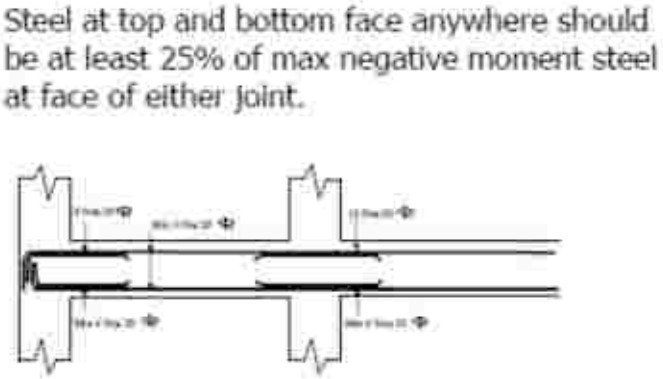

Lap length should be more than the development length. This code prohibits provision of Lap splice –-within a joint;- within distance of 2d from joint face; and within quarter length where yielding may occur.

For shear reinforcements, code restricts that close spacing over 2d Length of beam ends should not to be less than 100 mm, should not to be exceed by d/4 and should be atleast 8 times smallest diameter of longitudinal bar. elsewhere same should not to exceed d/2, where d is depth of bam and first hoop near joint should be within 50 mm of joint face.

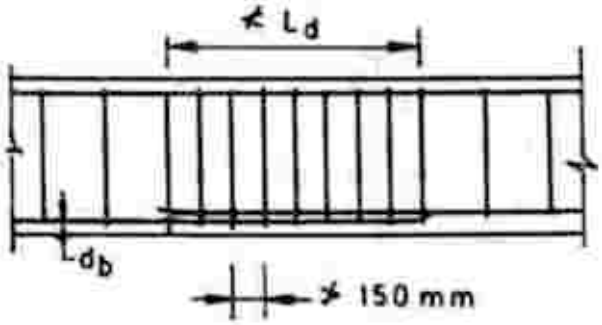

FIG 3 Shear Reinforcement in beams

For columns, Lap splicing to be done only in central half of column heightand these are design as tension splices. It is stipulated that not more than 50 % bars be spliced at a location. Hoops for entire splice length should be provided with spacing not exceeding 150 c/c or half of least column width, whichever is less. If length of any hoop is more than 300 mm, additional cross tie to be provided.

Further for columns, from each joint face special confinement reinforcement to be provided over length of larger lateral dimension of column, 1/6 clear span of member or 450 mm whichever is more. However, if, point of contra flexure is not within middle half of member, then, this should be provided over full column height to avoid shear cracks and corresponding formation of hinge in column. Code also states formulae for spiral and rectangular hoops in columns.

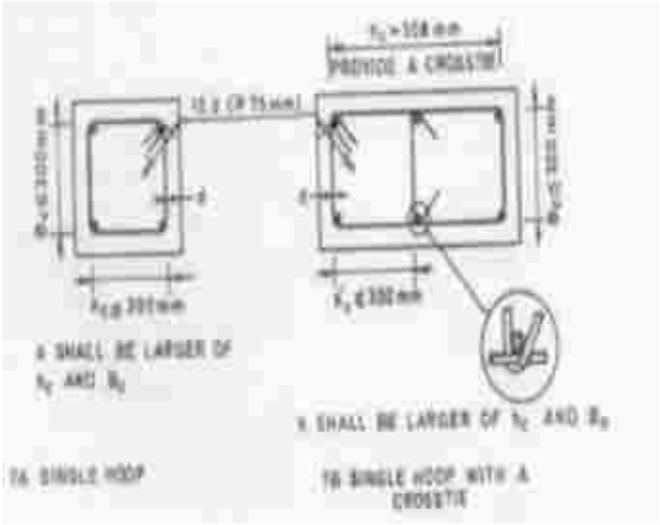

FIG 4 (a) Reinforcement in columns

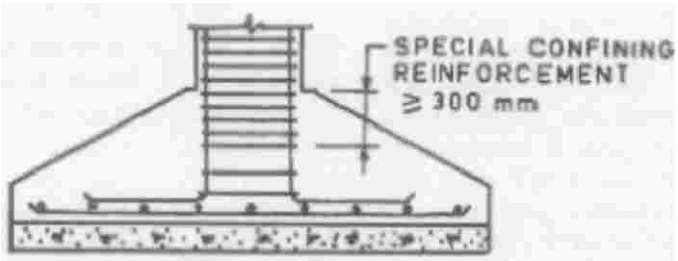

FIG 4 (b) Reinforcement in column footings

IS4326-1993 (5th Revision)

This code was published in 1967 and revised in 1976 and 1993. IS4326 deals with selection of materials, special features of design & construction using rectangular units, timber and prefabricated elements.

It highlights importance of building configuration and stipulates that for irregular shapes of structure, rectangular separation to be adopted. To avoid collisions during earthquakes, code gives gap widths for adjoining structures. Further, staircases interconnections with floors are grouped into- (i) Separated, (ii) Built-in or (iii) with Sliding joints. Guidelines for framed and box constructions are specified. For masonry buildings, strengthening arrangements like plinth bands, lintel bands, roof beams, steel at corners and T-joints, dowel bars, etc are illustrated.

During 2001 Bhuj earthquake, one End Cabin building (situated in end of yard for conventional Semaphore signaling) in stone masonry having G+1 arrangement was survived due to sufficient boding at various levels-ground, plinth, lintel, intermediate floor, sill and lintel of upper storey and roof level.

Design of MFC Building At Rajmundry

As a part of FY 2009-10 Budget, South Central Railway was asked to develop a Multi Functional Complex (MFC) at Rajmundry in Vijaywada Division. Rajmundry is seventh largest populous city in Andhra Pradesh, and located about 150 km away from Vijaywada and 190 km from Vishkhapattnam having co ordinates as 18o N and 82oE. Being located in Seismic Zone III, it was considered for seismic analysis. As proposed height was about 12 m, Static seismic analysis was conducted.

MFC building is regular structure with pile foundation (500 mm dia, bored, cast in situ piles of 10 m depth) on fine to medium sandy strata. Being lifetime structure, importance factor of 1.5 was taken. With ductile detailing arrangement (special moment resisting frames), response reduction factor of 5.0 was considered. With these parameters, STADD analysis was carried out for several load combinations and members were designed as per codal provisions of IS-1893-2002, considering M30 concrete and Fe-415 steel.

It was observed that earthquake loading induces high shear forces and large bending moments causing heavier sections with more reinforcement requirement than that for limit state analysis. This leads to more initial cost but safe and durable structure over its lifetime. All detailed drawings were prepared following the principles of IS-13920-1993.

FIG 5 (a) Rajmundry Multi Functional Complex

FIG 5 (b) Rajmundry Multi Functional Complex-- Another view

CONCLUSIONS

Seismic analysis for regular, symmetrical structures is easy and not herculean task. When one considers earthquake effects and corresponding forces, resulting cross sections of Reinforced Concrete structures are larger than Limit Stress analysis. This may lead to uneconomical solutions. Hence it is suggested that unless structure fulfills all laid down criteria of IS-1893-2002 or as per special needs, building may be designed using Limit Stress Analysis method with few structural modifications as:

1. All footings should be provided with special confining reinforcement.
2. Ground / Plinth beams with positive steel and sufficient shear reinforcements to be provided.
3. Columns should have minimum width of 300 mm with sufficient cross ties and 135 degree hooks and longer projections. Special confining reinforcement need to be provided.
4. Sufficient anchorages to beam reinforcements and continuation of column bars to be provided at column-beam joints.
5. At a joint face, positive moment reinforcement at least 50 % of negative moment reinforcement need to be provided.
6. In beam, steel at top and bottom face anywhere should be at least 25 % of Maximum negative moment steel at face of either joint.
7. For masonry buildings, sufficient RCC bands at ground/plinth, lintel, roof levels should be integral part of structure.

REFERENCES

1) IS 1893 (Part I), 2002, Indian Standard Criteria for Earthquake Resistant Design of Structures (5th Revision)
2) IS 13920, 1993, Indian Standard Code of Practice for Ductile Detailing of Reinforced Concrete Structures Subjected to Seismic Forces
3) IS 4326, 1993, Indian Standard Code of Practice for

◆◆◆

ATTENUATION

Attenuation is the loss of energy of a wave due to absorption and scattering travelling through a medium. The losses need to be minimized to enhance the amount of the reflected energy available to the transducer for detection of the flaw reliably. The energy/intensity of a wave 'I' after travelling a distance'd' is related to its initial energy/intensity 'I_0' as

$$I = I_0 e^{-\alpha d}$$

where α is a constant known as coefficient of attenuation. Greater the value of α, more will be the losses and the lesser will be the intensity of the wave after travelling a distance d. α depends upon the frequency and the average grain size of the material. Typically, for ultrasonic testing of rails/ welds, α may be defined as

$$\alpha = kD^3 f^4 / v^4$$

where 'k' is a constant, 'D' is average grain size of the material being tested and 'f' is the frequency of the waves being used for testing.

For higher frequencies, the penetration of the sound in that medium becomes poor due to higher losses.

For testing, normal probe uses longitudinal waves (because there is no transformation) while all angular probes use shear waves (because of transformation and total internal reflection of longitudinal waves). We know that the velocity of shear waves is approximately half the velocity of longitudinal waves in a given medium. It means in a given medium, the coefficient of attenuation for angular probe will be 16 times higher as compared to normal probe, which will result in higher loss of energy making the detection of flaws difficult by an angular probe. Therefore, to reduce the losses, the frequency of crystal in angular probes is kept half of the frequency of crystal used in the normal probe. This will keep the ratio v/f almost the same. That is why during testing by trolley the normal probe used is having 4MHz frequency while all angular probes have 2MHz frequency.

Experience on Tunneling – Problems and Solutions

By
Pawan Kumar Singh*

SYNOPSIS

While working as Dy.CE/Con in Lumding-Silchar GC Project (National Project), I encountered a number of problems and we (execution Team) tried to solve them out as far as possible. Presenting hereby, a case study on Construction of Single Line BG Tunnel No. 10 of length- 3235m from Km 100/620 to Km 103/730 between NewHaflong and New Jatinga-Lumpur stations in Lumding -Silchar Gauge Conversion Project of Northeast Frontier Railway.

1.0 Introduction

Lumding – Silchar GC work was sanctioned in 1996-97 and was declared as National Project because of its importance to the states of Mizoram, Manipur, Tripura and lower Assam.

Tunnel no.10 is located between New Haflong and Jatinga Stations. It is the longest tunnel of this Project having length of 3235 m. At the start and end of tunnel alignment, curve of 5 deg and 6 deg have been provided respectively. This tunnel is considered to be the bottleneck of this project. The whole tunnel is planned to be lined due to weak strata of the region. On right side of portal – 1 of tunnel, Dayang Nalla is flowing, similarly on right side of portal – 2 of tunnel Jatinga River is flowing.

* Sr.DEN/I/APDJ, N F Rly *Course no. 13026 Sr. Professional development*

Regional Geology

The area around the tunnel site is a succession of broad parallel hill ranges and valleys, steeply bedded spurs and ridges separated by very deep gorges.

The area around the final alignment lies in the Scupper Tectonic Belt on the outer which is bounded by Naga Thrust on the west and Halflong – Disang thrust on the east. Eight or more thrust have been recognized within the belt. The movement of rock mass is believed to have taking place from east to west. Haflong – Disang thrust is located about 3 km south of Haflong. The entire country is mountainous, rugged and broken. The hills are covered with dense jungles and thick undergrowth of evergreen bush, bamboo and kail.

Rock out -crop

Area is covered by 2m thick soil cover. No regular outcrop of the rocks are seen except at few scattered outcrop of weathered sand stone & shale along nalla cutting. Sand stone, siltstone and shale are highly weathered at few places along nalla and show staining along joints.

Dips and Strikes

The alignment of the tunnel is running slightly oblique to strike of the bed rock. The strike of the rock in the area varies from N 700 W – S. 700 E to E – W and the dip of the order of 210 to towards North Easterly direction. Spacing of bedding joints varies from 10 cm. To 50 cm. shales are thinly laminated. In addition to the bedding joints, the following other prominent is sub parallel to strike of the bed rock, the bedding joints are anticipated to be unfavourable.

Site observations

Excavation in cuttings at new Halflong station yard, and nearby areas, it was noted from exposed strata/cutting that it does not consist of homogeneous material. The soil mass has many bedding joints, occasionally as close as 30 to 50 cm, steeply dipping towards south Easterly direction.

Considering all these factors, Heading excavation followed by benching with a lag of about 15 to 20m was adopted.

Features Of Tunnel:

i. Length of tunnel = 3067.5 m.

ii. Length of Cut & cover at Lumding end = 67.5 m.

iii. Length of Cut & cover at Silchar end = 100.0 m.

---

iv. **Total length** = 3235 m.

v. Length of tunnel in straight = 2844 m.

vi. Length in curve (cumulative at both ends) = 391 m.

Alignment

The tunnel is located between km. 100.620 (portal - I) to Km. 103.855 (Portal-II), a length of 3235 M. including cut & covers of 67.5m. on Lumding end and 100m. on Silchar end in both the approaches. The tunnel is on a curve of 50 for 131 m at Lumding end, and curve of 6.00 for 260 M. at Badapur end; central 2845 M is on straight.

Entrance of tunnel is located immediately after Haflong yard on left bank of Dayang River and the exit (at Silchar end) is on the left bank of Jatinga River. The tunnel is crossing a saddle between two river valleys, with over burden of 250M to 320 M above the tunnel in the central about 1 Km. Length between km 101/700 to 102/800. A nallah also crosses the alignment near the exit of tunnel at Km. Km. 103.760 i.e. Silchar end.

Gradient of Tunnel

From km 100.620 km to 100.700 km (80 m) is on rising grade of 1 in 400, from 100.700 km to 101.917 km (1217 m) is on rising grade of 1 in 2000. Stretch 101.917 km to 103.485 km (1568 m) is in falling grade of 1 in 70 and km 103.485 to km 103.740 (255 m) is on falling grade of 1 in 300 and from km 103.740 to km 103.855 (115 m) is on falling grade of 1 in 125. Hence summit point is being at 101.917 km.

Portals

Both the Portals of tunnel no. 10 are located on steep hill slopes. Portal No. 1 is located at Km.100.620 and portal No. 2 at Km. 103.855.

Tunnel drainage: Since the tunnel 10 is in the rising grade upto summit at Km. 101.917 which is 1297 m length from Portal No. 1(Lumding end) and falling grade for a length of 1938 m. from Portal No. 2 (Badarpur end), side drains are being provided falling both sides from summit point at Km. 101.917.

Sequence of construction

Heading followed by benching:

a. Excavation to be done by Drilling/Blasting method.

b. steel arch ribs are to be erected on wall plates, tie rods to be fixed.

c. Insertion of lagging behind arch ribs and filling the

annular space by lean Concrete i.e. Backfilling.

d. Excavation in benching by drilling/Blasting method.

e. Erection of verticals & horizontal bottom struts below thewall plates,

f. Insertion of concrete blocks at the base

g. wedging (alignment) and tightening the vertical Ribs and insertion tightening of tie rods between verticals.

h. Insertion of lagging behind the verticals and Backfilling.

i. Concreting of tunnel invert (Bottom) & side walls upto 1.5m height.

j. Concrete lining of walls

k. Concrete lining of arch.

l. Drilling holes in lining and carrying out contact grouting

Execution

The work for 'Construction of single line BG Tunnel No. 10 (length – 3235m) at Km 100/620 to Km 103/730 between stations New Haflong - JatingaLumpur station between Lumding-Silchar Section including earthwork in formation to make profile as per BG standard…. etc, was awarded to M/s Patel Engineering, Mumbai vide Contract Agreement No. **Con/SL/903 Dt. 17.10.2005** at a value of **Rs. 110,46,88,902/-** with stipulated completion period of 4 years i.e. upto 01.09.2008.

For design of tunnel, Railway awarded consultancy to **M/S SOWIL (Sir Owen Williams Innovestment Ltd), Navi Mumbai.** The design and drawing was submitted by SOWIL which adopted Horse Shoe shaped tunnel having inside horizontal width of 6.90m & vertical height of 7.1m and same was approved by the Railway. The excavated area of the Tunnel was about 77sqm and the finished area was 65sqm.

Portal- 1 (earth was filled upto 2m above SPL level – the same was cleared)

Portal- 2

Problems being faced during construction and remedial measures taken at site:-

Numerous technical problems are being faced till date, some of these are briefly discussed below:-

(I) Chimney/Cavity formation

Geological over break, cavity formation were quite often feature during Tunneling. As frequent changes were occurring in geological feature of strata, having non homogeneous and anisotropic nature, in spite of change of drilling pattern and explosive quality, not much headway could be achieved in controlling geological overbreak.

It is experienced that whenever earth cushion on top was less, coupled with natural drainage on top ,the problem of chimney formation was faced. During underground excavation of tunnel (heading and benching), due to very weak, non homogeneous, presence of seepage and soft soil, over break is regular phenomena even leading to formation of the chimney on many occasions.

Forepoling is being resorted to support the soil and increase its stand up time. Once chimney formation starts, it becomes critically difficult to control it specially incase of shale.

Forepoling done before taking Blast Pull of Heading

Chimneys were being controlled by inserting the rolled steel coupled with concreting of the over break as fast as possible, so that overburden is supported adequately. After this, lining of the tunnel to be resorted immediately so that overburden is supported fully.

But, once a chimney(open to sky) is formed, it has to be tackled (concreting or suitable filling material) from top and also suitable support system has to be provided from bottom.

At km 100/720.00, one chimney was formed due to less overburden i.e. about 28.35 m having dia of 7.45m reducing to 4m at formation level. The Chimney was tackled successfully by providing steel joist horizontally &vertically to form an 'Umbrella' with steel plates welded to the backside of joists. The concreting (1:4:8) of about 2m was done from top and allowed to set for 3 days. After that the chimney was filled up by alternate layers of granular material (4m thick layer) and M-15 concreting at a thickness of 2.00m each layers. The chimney was tackled successfully in 8 days by pouring 212 cum of concrete and 516cum of granular materials from top.

At km 103/580.00 also, one chimney formed which is open to sky and its height was 32.00 m and dia at upper end was 8.5m reducing to about 5m at the formation level. The Chimney was tackled in the same manner as described above.

(II) Methane Gas Detected inside both portals of Tunnel

Methane gas was detected inside both the portals of tunnel on 30/11/06 and 7/12/06. Work was stopped and as per guidelines of IS – 4756 1978, advice of Director General of Mines safety, Dhanbad was sought for supervising personnel and additional safety measures to be taken for going ahead with the work.

A joint meeting between Dy. CE/CON/III/ LMG, Dy. DGMS, and contractor's representative was held in the office of Dy. DGMS at Sitarampur, Burdhman (WB).

It was stated that Methane is a hazardous gas and is highly explosive at the concentration of 9% with 4.5% and 15% being Lower and Higher explosive limits. It is an colourless, odourless, lighter than air with a tendency to remain in cavities of the roof.

It was stated that whenever concentration of methane exceed 1.25% at any place, supply of electric energy shall be cut, all diesel equipments to be shut down, and battery terminals isolated. Any form of spark is has to be prevented.

Drilling, blasting welding gas cutting or any activity which may result in spark must not be undertaken unless the concentration falls below safe limits. Concentration of the methane is be brought down by ventilating the tunnel by

blowing of the fresh air and taking care that exhaust gases do not recirculation.

For further underground of the excavation of tunnel instruments to be used for detection of gas, its analyzing in laboratory, flushing out of the gas and observing the concentration of the methane. Detection, recording and dissemination of the information is very important for safe working condition inside the tunnel.

Main remedy to methane is to enhance ventilation in duration and capacity in order to dilute and flush out methane. Experience mining engineer may also be engaged for daily supervision and guidance.

Ventilation system (Air-pumping type):-

Reason For Methane Gas (as given by the Team of experts from CIL)

The reason for CH4 found was due to presence of a Coal Seam (layer) of about 4-5m thick that was encountered during the excavation of the Tunnel. According to the Team whenever there is any Coal, the presence of CH4 gas is inevitable and this Coal Seam is a very pure form of immature Coal (Pitch Coal).

Since, CH4 is a odourless and colourless gas which can only be detected by instruments. It does not even cause any suffocation or difficulty in breathing. The Specific Gravity of CH4 is 0.553 and thus is lighter than Air, consequently, it always get accumulated at the top of Tunnel i.e. in the Arch(Heading) portion.

The Tunnel should be checked for the presence of any gases – especially Methane, which is color-less and odourless gas but is highly inflammable.

Methanometers are available in Market foe detecting Methane gas in air.

Now-a days - Multi-Gas Detector are also available – are used to detect CH4(Methane), CO(Carbon Mono-oxide), CO2(Carbon Di-oxide)and O2(Oxygen).

Hand-held Multi-gas detector (including Methane):-

(In Foto :- Drager explosimeter -XM-2000 model)

- Sensor — Measurement Range
- Ex. --- 0 - 100% of LEL (0-5% by Vol)
- O2 — 0-22% by Vol.
- H2S — 0-200ppm
- CO — 0-2000 ppm

Action to be taken in case of Methane gas detected:-

- >5% of LEL - Increase ventilation.
- >10% of LEL - Suspend hot work such as welding or Gas-cutting etc.
- >20% of LEL - Cease all works, cut electric power supply, withdraw employees and wait till conc. Falls down to less than 20% of LEL (through Ventilation).

Suggestions Given By The Team Of Experts Team From Cil (Coal India Limited):-

1. The Best method of tackling the Gas is through **Ventilation**. The Vent of the Ventilation system should not be more than 5m from the face and should be near the crown since CH4 gets accumulated in Arch portion. Therefore the existing Vent needs to be extended right upto nearest to the face of the Tunnel.

2. An **Exhaust type Ventilation** may also be installed at about 20-25m from the face of excavation to suck the gas, which has been pushed by the Blowing type ventilation, and throw it out of the Tunnel.

3. **The safe limit of CH4** is 1% (by volume) and should be strictly followed. For this a Explosive Gas Detector has be brought to the site and checked for Methane Gas regularly.

The explosive range of CH4 is 5% to 15% by volume, combined with 12% Oxygen.

The lower limit of this range i.e 5% is called LEL(Lower Explosive limit). Majority of the instruments available in market show concentration of CH4 gas as %age of LEL.

4. **No smoking, mobile phones** are to be allowed inside the Tunnel.

5. Wearing of **Safety Helmets and Gum-Boots** should be mandatory inside the Tunnel.

6. 2 nos. of **Flame Safety Lamps** (costing about 7,000/-) may be hanged near the face of excavation on LHS and RHS. The color of the flame, whose normal color is yellow, turns to blueish when CH4 gas is encountered. As the concentration of CH4 increases the size of flame also increases to double of it's normal (1cm). When the

concentration of CH4 reaches LEL, the flame puts off automatically.

(III) Distortion of Arch Rib in Heading (& Benching):

I) Concentrated load due to detached hillock (overburden-16m) was coming on the tunnel supports between Km. 103/555 to Km. 103/490 (approx. length 65m). The strata at this location is of squeezing type of soil. Due to heavy loads on the arch and vertical steel supports already erected, supports are leaning inside the tunnel. Additional temporary vertical & horizontal steel bracings/supports were required to be erected and concreted for about 1m to strengthen the temporary supports, thus, saved this tunnel from opening / collapse. 16m overburden is not sufficient to provide tunnel in soft soil.

ii) Cross beams welded together have been provided at springing level to arrest the leaning of arch ribs inside the tunnel.

Breaking of existing Backfill (concrete) and lagging for rectification of caved-in members.

Heavy Loosefall occurring at the time of Rectification:-

iii) Tunnel supports have been re-designed for squeezing soil type of soil strata for this stretch. ISMB 250 used in place of ISMB 200.

Also Precast RCC laging fixed inside (instead of outside) the flange leaving steel bars for concreting in 2nd layer of concreting.

Nominal reinforcement provided in the affected stretch of 65m.for additional strength. Shear

reinforcement mesh of 12mm (H)x16mm(V) @ 200mm spacing were welded to vertical Steel Ribs of ISMB-200.

iv) **Arch ribs** are leaned/bent and came down by 40cms from top and also from sides. Infringement to SOD was checked.

Rockbolts can be used for stabling the Earth mass behind and increase the standing time (before final Lining)

v) **Heavy seepages of underground water** - adequate pumping arrangement was made to drain out the water from tunnel at regular intervals or when necessary.

Cement grouting upto 1.5 to 2.5m also done to stabilise the backfill so as to reduce the lateral pressure on the Steel supports.

vi) Adopting Smaller Cross section of Tunnel- Consequently arch ribs were leaning and bending inside the tunnel and tunnel started sinking and decreasing in its width by 1400 to 1800 mm at portal 1 and portal 2 respectively. Therefore tunnel cross section was made smaller after duly considering the SOD so that no dismantling of steel support required and safety of tunnel is ensured at first. The Tunnel inside width of the tunnel was modified to 5.53m from 6.9m with same steel section and spacing @ 400mm c/c. (The vertical ribs & Arch ribs are of Steel section ISMB-200).

Other than technical problems

1. **Menace of militancy-** NC (North Cachar) hills of Dima Hasao District is badly affected by militancy. More than 70 laboures, CRPF personnel, army personnel, RPSF and Assam Police personnel have been killed. Cases of kidnapping, extortion and threats are regular phenomena. Several incidences of firing at approaches of tunnels, resulting frequent exodus of groups of skilled labourers. Fear of militancy among staff, labour, manager and supervisors affected their efficiency and out put. The railways pursued to state govt. and the dedicated force deployed at sites.

2. **Menace of malaria—**Since area is infected with malaria causing death of significant nos of labourers. Incidence of death of worker, created panic among labour groups and exodus of whole group resulted suspension of works for weeks together. Impregnated mosquito nets and regular spraying of DDT along with preventive medicines are being used.

3. **Restriction in mobility-**Since area is militancy prone, thereby movement of man and materials is restricted, three times in a day during 8-16 hrs, only with security convoy. In no case one can move before 8.00hrs. and

after 16.00 hrs.

Also, the only connectivity road i.e.NH-54 (E) is in very bad shape.

4. **Long down time of machinery:—** As the area is remote, immediate repairs of brake-down machineries are not available and No reputed company i.e TATA, L&T, Siemens etc. is able to provide timely service.

The work had to be stopped in May' 2008 due to problem of militancy. (and simultaneously, the prices of Steel increased very sharply)

The said CA was terminated by the Competent Authority "Oct/2008 and fresh tender was invited on 'Risk and Cost' Basis.

The progress at the time of termination of the Contract was as given below :-

Location	Heading	benching	Lining
Face-I	253.4 Mtr	148.00 Mtr	130.00 Mtr
Face-II	371.6 Mtr	163.00 Mtr	152.00 Mtr

It may b noticed that the progress of Heading at both faces is much more than the Benching (or Lining).

- The Balance work of the above Contract agreement was proposed to be executed on risk & cost basis.
- Accordingly, A Tender Schedule of the balance work has been prepared based on the fresh rate analysis attached, the cost of which comes out to be Rs. 150,33,69,628/-. But, since the instant Tender was on the 'Risk and Cost', the rates could not be modified and the rates were taken same as per the original accepted rates in the terminated CA. (CA No. CON/S-L/903 dt. 17.10.2005).

  The cost of the work was then reduced to Rs. 106,06,79,963/-.
- By this time, some items was proposed to be variated like backfill related items, more structural steel due to lesser spacing and heavier sections, additional surface reinforcement etc.

Therefore, the Tender Schedule was made as combination of Qty as mentioned in A' and 'B', where - 'A- R&C Qty' and 'B- variation Qty'.

- The Tender was floated on 2 Packet System – DOO - 12.12.2008 (Technical Bid) & 16.01.2009 (Price Bid).

  For balance work, Risk & Cost tender at a value of Rs 106,06,79,963/- on two packet systems was invited & opened. Two tenderer participated in the tender & both were found eligible & technically suitable, accordingly price bid was opened and M/s Patel-ONYCON (JV), Mumbai was found L-1 at a tendered value of Rs. 1,95,02,29,138.50.

SAG level TC was formed (CE, FA&CAO and CSTE).

- Considering the rates high by TC (and after approval of GM/CON/NFR) negotiation were conducted with L-1 on 19.02.2009. The negotiated offer of L-1 valued at Rs. 1,89,43,03,343.50. TC minutes for accepting negotiated offer, duly approved by GM/Con/NFR were sent to Railway Board on 09/03/2009.
- Subsequently, Railway Board asked for certain clarifications regarding changes in tender conditions etc. vide their letter no. 09/WI/NF/Lumding-Silchar(Tunnel-No.10) dt. 15.04.2009. Supplementary, Tender Committee was conducted and its minutes duly approved by GM/Con/NFR were sent to Railway Board vide GM/Con's letter no. W/362/COM/S-L/Tunnel/2004/08 (R&C) dated 28/04/2009.

Railway Board vide letter no. 2009/W-I/NF/Lumding-Silchar (Tunnel No. 10) dt. 27.08.2009 directed the Railway to conduct further negotiation with L-1 to bring down the rates. Accordingly, 2nd round of negotiation was conducted on 03/09/2008 and position was as follows:-

Name of Tenderers	Estimated Value of Work (Rs.)	Originally Offered Value (Rs.)	Negotiated Value of offer of 1st round of negotiation (Rs.)	Negotiated value of offer of 2nd round of negotiation (Rs.)	RLY's Savings during 2nd negotiation in (Rs.)
M/s Patel- Onycon (JV), Mumbai (2/2)	106.06 Cr	195.02cr	189.43cr	187.94cr	1.48cr

2nd Negotiated offer was 77.19% above the estimated tender cost, which was justified based on various aspects and recommended for acceptance at Rs. 187.94cr. The Tender File was sent to RB on 9.9.09 after getting the approval of GM(Con).

RB asked for some clarifications by Railway, mainly because of the fact that the L-1 Agency was a JV, which consisted of M/s Patel as a Lead Partner, which coincidently was defaulting contractor in this instant 'Risk & Cost' Tender.

The issue was as to how the Railway shall recover Risk and Cost from one of the JV Partner and the methodology of the same and also any legal angle may be explored. Finally, after about 10 months, RB returned the Tender File by Discharging the instant Tender and recommending to float Fresh Tender & also raised the GM's Tender Acceptance power in this National Project to Rs. 200cr.

Accordingly, the Tender was again invited at Zonal Level and finalised by GM(Con) and was awarded to APEX-ABCI(JV) at Rs. 167.0 in Oct'2010 with DoC upto Oct'2013.

Apart from bad Geology of the strata encountered, the advance progress of Heading done at both ends also created much problems. Therefore, a bare minimum lag (of about 20m) should have been followed, depending upon the stability of the strata.

◆◆◆

Drainage Heading as Sub-Surface Drainage:

By
Sai Singh Khongrymmai*
Renya Ete**

SYNOPSIS

Proper drainage of cuttings, hill slopes, embankment and embankment/natural slope of Railway line is very important for the health and strength of Railway track in Hill sections. Therefore, drainage is an important part of general maintenance of Railway line in Hill sections. Drainage system consists of surface drainage system for drainage of surface water and sub-surface drainage system dealing with drainage of sub-surface water. Several methods are available for sub-surface drainage. However, this paper discusses one important system of sub-surface drainage – DRAINAGE HEADING.

1.0 Introduction

During rain, water percolates into the soil and flow through the soil strata. A well-developed clay horizon presents a deep-lying obstacle to the further downward percolation of water. Subsurface runoff cannot easily penetrate the clay layer and flows laterally along the horizon as it moves toward the stream system. This type of runoff is slower than its erosive counterpart over the land surface and leads to water saturation of the upper part of the soil profile and the possibility of gravity-induced mass movement on hill slopes (e.g., landslides).

Seepage of water below formation causes gravity-induced mass movement on hill slopes (e.g., landslides due to base failure, toe failure or slope failures) leading to frequent disturbance to formation and track geometry. Therefore, quick release of seepage water in a well defined path is essential to prevent such failures of formation. Function of sub-surface drainage is to allow quick release of seepage water through well defined path.

Surface drainage for quick removal of surface water by development of a network of catch water drains, side and cross drains etc. can only tackle surface. However, for removal of sub-surface water these measures are not effective.

A subsurface drainage provides a well defined path for quick removal of sub-surface water by intercepting sub-surface water and carries it off. Subsurface drains are most beneficial in providing internal drainage of slopes to improve their stability and reduce erosion.

Drainage heading is a sub-surface drainage system for draining out seepage water in hill slopes. This is used as a measure for formation treatment in hill section where there is heavy seepage of water with or without any apparent source of water on upstream side. The water enters the through the joints of the drainage heading and drainage is achieved by gravity.

Problem Statement

Large portion of track in N. F. Railway is passing through the slopes of numerous hills of the Himalayan range. The hills are young and unstable. The strata comprises of many

*Sr. DEN/I/APDJ, NFR
**Dy. CE/Con-3/SPTR, NFR

Course no. 12209, Sr. Professional development

thin layers of different soil inter –laden with layers of clay soil and are mostly unstable. Therefore, track on these hill slopes remain prone to settlement/subsidence due to shear failures in the form of base failures, toe failures and slope failures due to saturation of soil by underground water.

One such section, where these types of problems are frequently faced is Lumding – Badarpur section of Lumding –Silchar line of Lumding Division of N. F. Railway.

The hills of Lumding – Badarpur section receive maximum rainfall with continuous long spell which generally start in May continuing upto end of October. Due to poor soil characteristics compounded by jhum cultivation (shifting cultivation), deforestation, heavy percolation of rain water takes place during the long heavy rainfall. This causes saturation of the soil leading to frequent disruption of Railway line in the section due to failures of formation in the form of sinkage/subsidence/landslips etc.

For solving the problem of sinkage and slope failure solution has to be two folds: (1) The drainage of surface water to be tackled by surface drainage system in the form of network of catch water drains, side drains, cross drains, outfall etc. and (2) Drainage of sub-surface water in the form of sub-surface drainage below the ground surface to intercept, collect and/or convey underground water, seepage water etc. Drainage heading is one of the oldest sub-surface drainage system used in Railway formations. The method had been extensively used by British Engineers in the construction of Lumding – Silchar MG line. Though several innovative sub-surface drainage systems are available today, most of these involve costly construction materials and installation machineries which are often not readily available in remote and difficult areas. In contrast, drainage heading is a very old method and require minimum technical expertise and involve casting of pre-cast slabs and its transportation, earthwork in excavation with readily available means of excavation, boulders etc. Therefore, drainage headings are cheaper, easier to install and faster. Its maintenance is also simple as it involves only removal of the boulders and cleaning the choked location and no special equipment is required.

Soil Mechanic Of Hill Slope

The two factors that have the greatest effect on slope stability are

a) Slope gradient

b) Ground water

SLOPE GRADIENT

The effect of slope gradient on slope sliding can be understood by considering the behavior of pure, dry sand. Slope stability in sand depends entirely on frictional resistance to sliding. Frictional resistance to sliding in turn depends on

i. The slope gradient that affects the portion of the weight of an object that rest on the surface

ii. Co-efficient of friction

So when the slope gradient is steep enough, the mass or block slides over the surface as the downward force is greater than the frictional resistance to sliding.

Shear Strength:

A block of uniform soil falls or slides by shearing. That is one portion of the block moves past another portion in a parallel direction. The surface along which this shearing action takes place is called shear plane or the plane of failure. The resistance to shearing is often referred to as shear strength. Pure sand develops shear strength by frictional resistance to sliding. Pure clay being sticky substance develops shear strength by cohesion. The presence of clay in soil increases the shear strength of the soil over that of pure sand because of the cohesive nature of the clay.

Dry clay has considerable shear strength but as it absorbs water, its shear strength decreases because water films separate the clay particles and reduce its cohesive strength. The structure of the clay particle will determine how much water will be absorbed and consequently how much the shear strength will decrease upon saturation. Saturated clay can have about 40 to 90 percent of their volume occupied by water and hence reduces the slope stability drastically.

From the above, it is clear that a soil with considerable percentage of clay with high water absorption level is likely to fail.

Rain water over the slope is generally disposed off by a network of surface drainage like catch water drain, side drains and cross drainage system. However, part of the rain percolates down the surface of soil into the subsoil causing saturation of subsoil.

Seepage and ground water play a major role in stability of the slope. It is generally observed that the hill slope or embankment slopes are stable during dry season but settle down or slides down during rainy seasons. This seasonal change in stability is mainly due to the change in the amount of water in the pores of the soil. The

greater the slope gradient and the more ground water present, the less will be the stability of the slope regardless of soil type.

The effect of ground water on slope stability can be appreciated by considering the block of pure sand. Frictional resistance to sliding in dry sand is developed as the product of the co-efficient of friction and the normal force acting on the surface of the failure plane. In this condition, the sand grains are interlocked, or jammed together by the weight of the sand. The greater the force that causes this interlocking of sand grains, the greater is the ability to resist the shear force that is caused by the down slope component of the soil weight. As the ground water rises in the sand, the water reduces the normal force because of the buoyant force exerted on each sand grains as it becomes submerged. This reduces the frictional resistance to sliding.

Seepage Of Water

The rain water seeping through the slope surfaces contribute the seepage force as it moves down the slope. The seepage force is the drag force that moving water exerts on each individual soil particles in its path down slope.

Settlement of formation and sliding of slope usually occurs in deep, moderately fine or fine textured soil that contains significant amount silt and/or clay or shale. In this case, shear strength is a combination of cohesive shear strength and frictional to sliding. Ground water reduces not only frictional resistance to shear but also cohesive shear strength.

The more the intensity of rainfall, the more water will percolate down the sub-soil, saturating the pores of the soil and finally slide the slope to lower level causing settlement and displacement of track.

To tackle this problem, i.e., slope failure, the seepage water in the sub-soil must be dissipated as quickly as possible so that soil particles are not fully covered by layer of water.

One method of draining out sub surface water is construction of Drainage Heading which is an underground tunnel in the formation below, filled up with boulders in a compact precast box. The water from nearby soil quickly drain into the drainage heading through the joints and gets discharged by gravity.

Advantages Of Drainage Headings

a. **Why drainage headings:** There are many innovative sub-surface drainage systems available today. However, these systems require heavy machineries for installation, which are often not available in remote areas with difficult accessibility as in case of Lumding – Badarpur section of N. F. Railway. It is difficult to mobilize such heavy machineries for small scale and scattered works and hence, it is difficult to get capable agencies. In contrast, drainage heading is a very old method and involves no heavy machineries. The only significant technical supervision required is during the casting of pre-cast slabs. Sizes of slabs are also small and light weight and therefore, transportation is also easy and handling is easy.

b. **Economics:** The materials used in new systems of sub-surface drainage are special of characteristics and normally not readily available due to non-availability of suppliers in small places. Therefore, costs of the materials for sub-surface drainage used in these new technologies are normally high. In contrast materials used in drainage headings are the same materials used for any RCC work and are readily available anywhere. The approximate cost of work per RM of heading is less than `. 5000.00

The above two factors significantly affected our decision to adopt drainage headings in Dihakho yard of Lumding Division for treatment of weak formation on L. No. 2

Design Considerations

Drainage heading components are not designed to take heavy load since vehicle load gets dispersed and intensity becomes negligible at top of the top slab. The components are designed to take the weight of earth coming from depth equal to 2 x width of excavation (triangular load) during installation only. However, the components should be sturdy enough not to fail before filling of opening with boulders after insertion of components is complete. Therefore, components are casted with nominal reinforcement only. While adopting drainage headings for sub-surface drainage, following points are required to be taken into account:

a. **Site plan:** Site plan should indicated location of mouth of the heading and intended or proposed end preferably a few metres beyond the line intended to be attended. It should also indicate probable depth of cushion i.e. depth of earth above top of heading. In addition, surface drainage network to connect with nearby stream, low area etc. should be indicated and any surface drain or any other structures, if already existing, should also be indicated.

b. **Size of excavation:** Size of excavation is decided keeping in view availability of working space. Size should be adequate for one man to do the excavation and mucking being done by few men standing in a line. Generally, internal dimension of heading (i.e. inside

dimension after installation of structural components) is kept as at least 1.6 m x 0.8 m. Therefore, size of excavation = internal dimension + 2 x thickness of structural components.

c. **Cushion above Heading:** For stable strata, cushion of 2 x width of excavation is adequate. However, drainage headings are generally installed where strata is weak to improve the stability of strata. Hence, from practical consideration it should be kept at least 5 to 6 m.

d. **Size of structural components:** Top and bottom slabs are design as simply supported beams while vertical components are design as hinged columns with positive earth pressure. Width of horizontal and vertical components is kept same. Size of a component should be such that it can be handled by one man during installation. Generally, component section of 200mm x 75 mm with 4 Nos. 8mm dia longitudinal bars at tension side and 3 Nos. 8 mm dia longitudinal bars on compression side and 6mm two legged stirrups @ 300mm C/C is adequate and can be handled by one man.

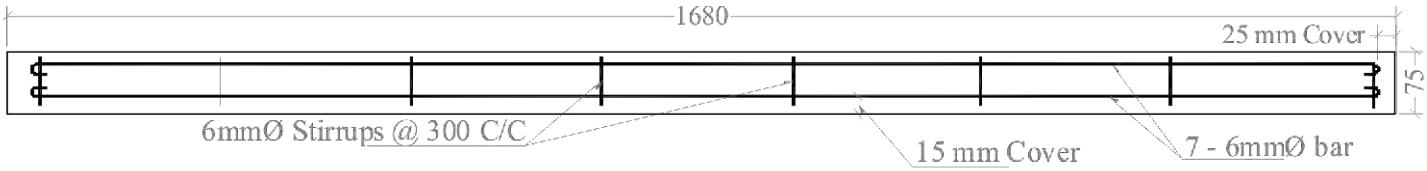

Fig.1: Details Of Vertical Member

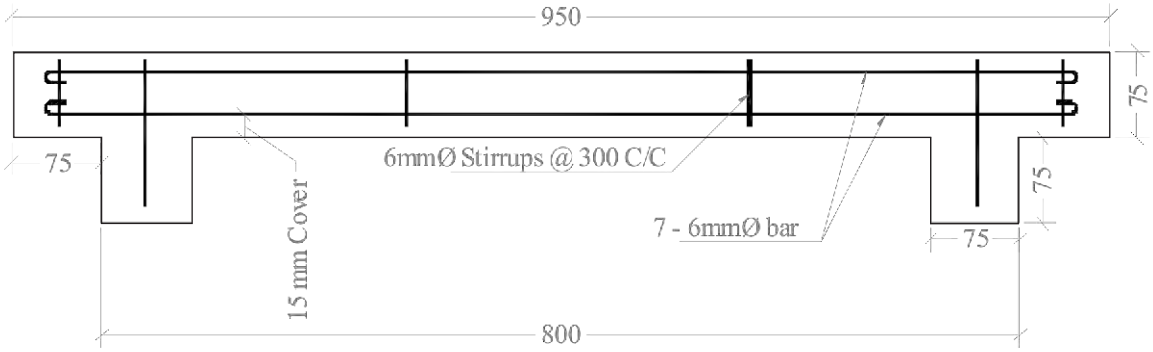

Fig.2: Details Of Horizontal Member

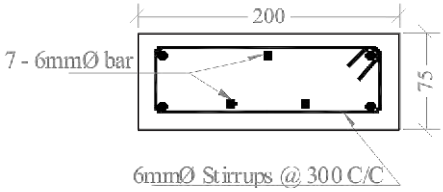

Fig.3: Cross Section Of Slab

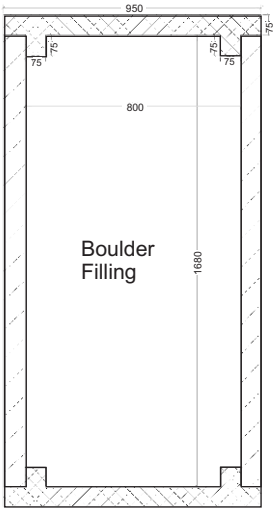

Fig.4: Front Elevation Of Drainage Heading

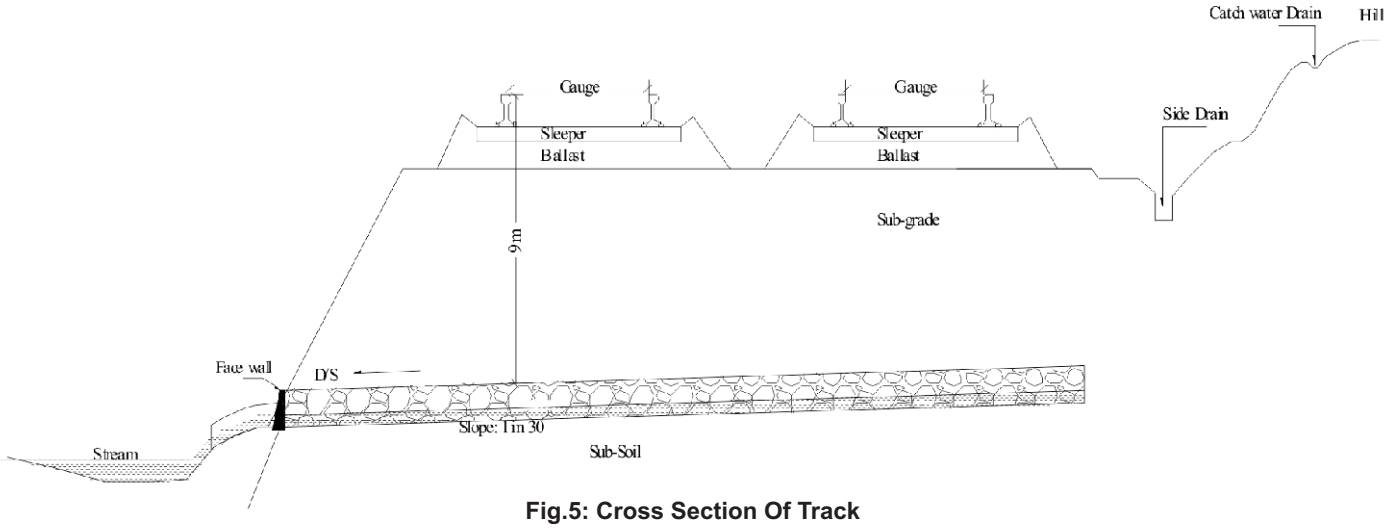

Fig.5: Cross Section Of Track

Satellite Image Of Site

Front View Of Completed Drainage Heading

Side View Of Completed Drainage Heading

Installation Procedure

Drainage headings are basically underground drainage systems in the form of small tunnels lined with precast slabs of appropriate sizes and filled with boulders for quick and effective disposal of excess water in the soil. The quick removal of underground water through the drainage heading prevents saturation of soil. This prevents formation failures. Installation procedure is very simple as detailed below:

1. Casting of precast structural members in casting yard.
2. Transportation to worksite.
3. Layout of site.
4. Excavation of opening by manual means.
5. Insertion or placement of structural members.
6. Step 4 and 5 repeated till the desired end is reached.
7. Filling of opening with boulders in proper layers.
8. Construction of face wall and surface drain.

Maintenance Of Drainage Headings:

The boulders in the headings so constructed are liable to be clogged with silt and earth especially near the entry. To ensure that they remain effective, yearly inspection is to be carried out similar to the inspection of minor bridges. If any sign of improper functioning is observed, the boulders may be taken out and heading cleaned and boulders put back in the opening.

Case Studies:

- **Settlement of line No 2 of DKE (Dihakho) Station of Lumding – Silchar MG Section:**

DKE Station is a two lines station between Lumding – Badarpur Hill section (MG Section) at km 47/2 from Lumding. The yard is on the slope of a hill about 13m in height. On left hand side is a hill and on right hand side is a small nullah which is almost dry during winter. The soil at the toe is however damp throughout the year and water comes out in very small quantity.

- **Brief History of sinkage:**

Line No. 2 of DKE station had been having sinkage problem since the 1970s. At one end of the sinkage location there is a minor bridge (Br. No. 90 (span 1x18.3m RCC box)) which discharges surface water into the slope of formation to a stream about 40 m away. The Rail Level is about 13-15m above the stream. Earlier, treatment of this problem was by filling of the gap below the track with unscreened shingles, boulders, quarry dust, coal ash from steam engine. However, problem persisted. In 2003-04, strengthening of formation was tried by construction of sub-bank along with sausage crate protection at the toe. Again in 2004-05 a network of pucca side and cross drains was constructed along the track and large pucca drain from D/s of Br. No. 90 to the stream to prevent seepage of water into the bank slope and sausage crate toe wall was provided at about 13m below the track. These remedial measures also failed and the line was badly damaged during the next monsoon and every now and then line was disturbed and train running suspended. Large cracks developed between L/No. 1 and 2 for a length of about 48 m in the month of Aug'2005.

Since, the above methods failed to protect the formation from sinkage, the only solution was to minimize percolation of surface water and quick removal of sub-surface water. For this many solutions such as insertion of perforated pipes etc. were contemplated.

- **Final Remedial Measure**

Since the quantum of work was small and area being inaccessible by road, final solution decided was to provide

time tested method of sub-surface drainage i.e. drainage headings. With this in view, a detailed survey was carried out in 2005-06 to pin point the exact location of the problem and it was found that though there was no source of water on upstream side, there was seepage of water beneath the track throughout the year in the affected portion. It was then decided to provide two drainage headings of at about 15 m apart. Accordingly, the two drainage headings were constructed about 9 m below the track with a length of 35m and 30 m respectively at the selected locations with slope of 1 in 30. Both the drainage headings extended slightly beyond L/No.1 also. Finally, face walls were provided at the mouth to resist the earth pressure. From the face walls, surface drains were constructed upto the stream to dispose off the water coming from the drainage heading. The work was completed in the month of Feb'2007. After the construction of the drainage headings, it was found that there is continuous discharge of water from the drainage headings even during dry season. During the monsoon of 2006-07 it was observed that sub-surface water from the hill and formation passed through the headings quickly and disposed off and since then sinkage of L/No.2 of the station stopped till date.

This remedial measure has worked successfully in preventing sinkage of L/No. 2 of Dihakho. With the success of this, drainage headings have been provided in many more locations of Lumding – Badarpur Hill section and they are functioning well till date.

CONCLUSION:

Although many innovative and faster technologies are available today for treatment of sub-surface water problem, they are costly. Often, agencies are not available for small scale works as inventory cost of these new methods are high. Moreover, transportation of heavy installation machineries becomes a deterrent in remote inaccessible places. In contrast, drainage heading method is very old but economical, cost effective and easy to install with no requirement of special equipments yet still quiet effective. Therefore, if work is of small scale and scattered, drainage heading is the most suitable. However, since the removal of underground water is through gravity, the method is successful mostly in hilly terrain.

◆◆◆

A NOD TO NOTABLE RESEARCH

Once a year, American Railroads' Transportation Technology Center Inc. (TTCI) conducts an "AAR Research Review" near its 52 square mile testing facility in Pueblo, Colo., to provide updates on promising R&D projects.

The 18th annual edition was held on March 5 at the pueblo Convention Centre, followed by the annual "track walk" on March 6 at TTCI, which enabled attendees to view demonstrations and displays along the 2.7 mile Facility for Accelerated Service Testing (FAST) track.

The dozens of emerging technologies mentioned during presentations included a thermite weld overlay treatment, remote operated hand brake, half frame concrete tie, next generation insulated joint and integrated freight car truck.

TTCI Senior Scientist David Davis described a continuous mainline rail turnout during his presentation on special track work. Tailored for use on industrial sidings, the turnout is designed to lift a car's wheels over a mainline so the train maintains a smooth ride. Last year, Progress Rail Services built a prototype turnout for BNSF Railway Co. that was tested for several months. Track strength testing at FAST revealed a weak spot that was addressed. BNSF will now test the turnout in revenue service.

Another technology showing promise in the R&D stage is a phased array ultrasonic rail flaw inspection system, which can examine rail at multiple angles with one probe.
The Edison Welding Institute, which has phased array system expertise, partnered with TTCI to perform tests. The phased array system's field testing results "agreed well" with modeled predictions on locating track defects and defect sizing, said Principal Investigator II Matthew Witte. He also reviewed several other promising rail flaw detection options.

Ref. Progressive Rail roading, Issue : April, 2013 – Page: 3

Construction of PSC Box Girder Bridge Across Panvel Creek, Navi Mumbai.

By
Laxmi Narayan Saini *
R. Shanmugam**
Harish Katoch***

1.0 Introduction

Central railway is constructing a double line suburban corridor from Belapur/Seawood-Uran Project in Mumbai Metropolitan Region (Index plan – Fig. 1). This Railway line is approximately 22.5 km long and passes through many creeks being a coastal area. A tidal creek, tidal channel, or estuary is the portion of a stream that is affected by ebb and flow of ocean tides. There is one important bridge on this alignment at chainage 2200m, crossing a creek near Ulwe village in Raigad district.

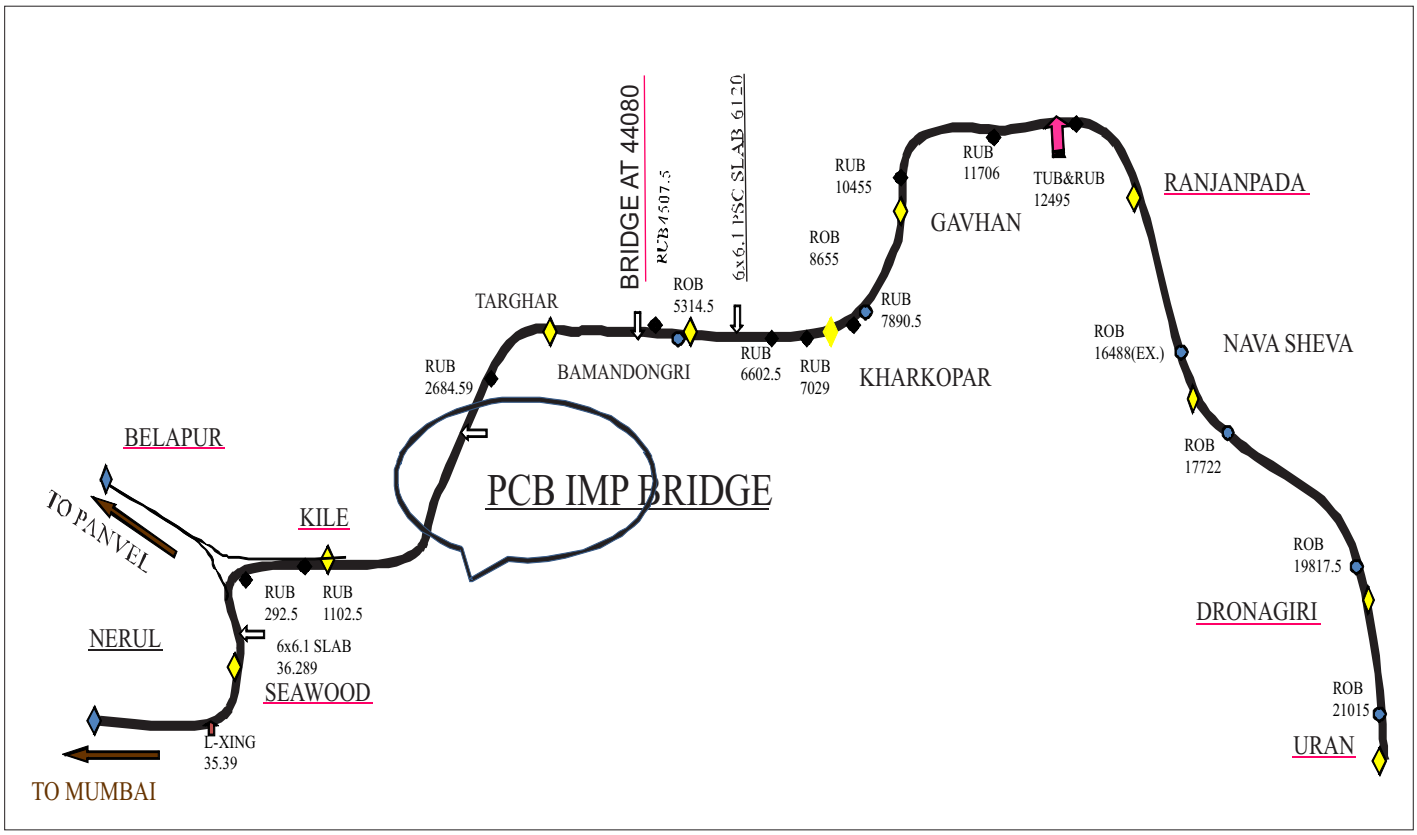

Fig. 1 – Index plan of Belapur – Seawood – Uran section

* ADEN/ANG/CR.
** AXEN/CN/SWR. Course No. 13101, Integrated Course
***ABE/UMB/NR.

The salient features and design basis at a glance:-.

1. This is a double line bridge with track centre of 5.30 m.
2. The length of bridge is 751 m. The span configuration is two end spans of 32.5 m each for facilitating road traffic i.e. to work as RUB and 14 spans of 49.0 m each over creek area.
3. This bridge has open foundation as hard rock was available at shallow depth and bed is of hard basalt rock (non-erodible).
4. This bridge has two spans between P-4 & P-5 and P-5 & P-6 for navigation of big barges/fishing boats and sand dredgers.
5. The vertical clearance at navigational span is 10.85m.
6. Name of Agency:- M/S Gammon India Limited.
7. Cost of work:- Rs 30 Crores.
8. Completion Period:- 36 months.
9. Rly's execution authority:- Dy Chief Engineer(const) Juinagar, Navi Mumbai, under CAO(C) Central Railway, Mumbai.
10. Design Consultant:-M/S Span consultants, New Delhi.
11. Proof Checked:- By IIT Delhi.
12. Salient features for designing:-

a.	Loading standard	-	MBG 1987
b.	Seismic Zone	-	IV.
c.	Concrete Grade of Box girders	-	M- 45
d.	Concrete Grade of Substructure	-	M- 35
e.	Bearings	-	Elastomeric
f.	Guide	-	Cast steel
g.	Environment	-	Coastal

Special features of this Bridge:

1. Open foundation in Creek

This bridge has open foundation although constructed in creek and having depth of water approximately 15m in centre of creek. This decision was taken considering the fact that availability of very good quality of hard rock (non-erodible) at shallow depth.

For doing open excavation in continuous deep water, it was necessary to use temporary cofferdam to stop water from entering in foundation area. Two numbers of steel caissons (hollow) were fabricated having internal diameter of 16 m and wall thickness of 1.0 m making outer diameter of 18.00 m.

Fig.2: Hollow caisson coffer dam in lifted position with the help of gantry

This cofferdam was taken to the exact location with the help of boats and lifted by launching gantry erected on floating barge to the required height Fig.1. For placing the caisson on pier foundation location, water was filled in the wall of cofferdam. After placing of cofferdam (caisson) at the location, the plugging operation was started for preventing entry of sea water inside the cofferdam. The plugging operation consisted of placing sand/clay filled gunny begs around inner & outer periphery of cofferdam Fig.3. It also involve placing of lean concrete. Help of divers was also taken for plugging. Once plugging was done then water collected inside the Caisson was pumped out. Open foundation as constructed as per usual practice Fig.4&5.

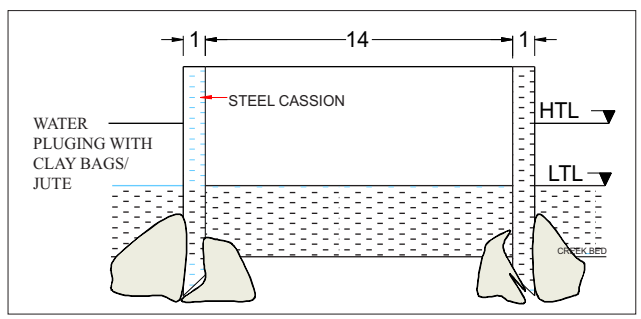

Fig.3 Plugging of Caisson bottom

Fig.4: Excavation for foundation inside the caisson.

Fig.5: Concreting of foundation raft.

2. Surveying- Locating position of piers in Creek.

- Two numbers of survey towers were erected at each end in the alignment of bridge with the help of Total station.
- Additional survey towers perpendicular to main survey tower's alignment was erected at each end at 75mm.
- Triangulation method was used to given position of foundation. For this total station equipment was set at main survey tower and theodolites were placed at additional at tower and other end main tower. Fig.5.

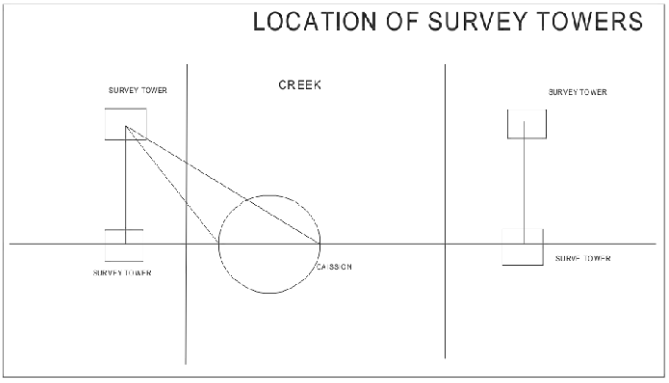

Fig. 6 – Location of survey tower

3. Quality Control in Construction.

Being an important bridge and located in severe environment, the best available quality standards were adopted. A full fledged laboratory was established at site. One separate Section Engineer and one Junior engineer from Railway side and one Senior engineer and junior engineer from agency side were posted exclusively for quality control and quality assurance. Each and every material used in construction was checked and tested in NACBL accredited laboratory (Railway approved) before put in to use. Steel and Cement were procured from prime manufacturers only. Important items such as all Elastomeric bearings were manufactured and tested in the presence of Railway official.

Casting of Girder in single pour

All the Girders were cast in single pour. The quantity of concrete of one box girder of span 49.0m is 250m3. The shuttering was robust and prepared from MS plate and MS angle. To avoid any cold joint, between two layers of concrete, Concrete mix was designed with high slump and retention up to seven hours, so that concrete reached every corner of shuttering, specially behind the anchor zone. Super-plasticizer and retarder were used to achieve required slump and to increase setting time. Extensive trials use conducted before casting of girders to ensure the quality of concrete. Further, the vibration and inspection window openings were made. Concrete was prepared with ice cooled water to control concrete temperature below 35 degree Celsius. For curing of box girder, exhaust fans were used. For concreting during rainy season, sufficient measures such as covering with tarpaulin were taken. To overcome any equipment failure, standby arrangements were made like additional batching plant, concrete pump, extra vibrators and needles, etc.

4. Optimization of span length

The span configuration of this bridge is 1x32.5m + 14X49m + 1x32.5m. The end spans are meant for road traffic with four lane. The span length of 49 m was decided by Consultant considering the most economical span based upon cost of substructure verses cost of superstructure.

5. Launching of Box Girders.

Box Girders were cast at casting bed near one end of creek. For launching of girders a special barge was fabricated which has arrangements for lifting of box girder. For launching of box girder the barge was brought under the box girder available on casting bed. Then the girder was placed on the launching barge. Further the barge with girder was towed to the required location with the help of towing boat fig. 7. As the vertical clearance is 10.85m, tidal variation alone was not sufficient for launching. Hence girder was lifted to the required height with the hydraulic jacks.

◆◆◆

Bridge on sea to extend Lakshadweep airport runway

India could soon get its first bridge-on the-sea runway as the Airport-Authority of India (AAI) has got the green nod to extend the 4,000-feet-long runway at Lakshadweep's Agatti island by constructing a 1,500-feet-long bridge on stilts over the sea and connecting it to the airstrip. Will be the expected to be built at a cost of Rs. 300 crore, the runway will allow ARTs to fly to capacity.

The current length allows only a 30-40 percent filling turboprop which no airline finds viable to operate as recovering the cost of a trip from 30 percent passenger load means sky-high fares that will find no takers.

According to the official statement the state-run authority expects to complete the work in the next two-three years. With material to shipped to Agatti, The work will be carried out very carefully only when the sea is calm which may take a little longer than expected as also the work will be executed for the first time in a coral island.

Apart from this, the Planning Commission has asked AAI to consider an airport in the distant Androt Island for enhanced air connectivity for Lakshadweep.

Ref : Construction Technology, March, 2013, Page: 30

Global Companies Keen on Corridor Projects

Ongoing Freight corridors projects have captured the attention of overseas countries and their companies. After Russia ,UK has shown its active interest in development of the Banglore-Mumbai economic corridor. This was conveyd after UK Prime Minster's visit to India having discussed ways and means to enhance bilateral trade with the Indian Prime Minister. We have asked our officials to explore British participation in India's National Manufacturing and Investment Zones and in a possible industrial corridor in the Banglore-Mumbai sector, said the Indian Prime Minister after his talks with British Prime Minister. At the other end UAE has shown active interest to invest in the ?90billion, in Delhi-Mumbai Industrial Corridor project. The project is being developed in collaboration with Japan, committed to invest ?5billion in this mega infra structure project, to cover 1483 km between Delhi and Mumbai.

Ref: NBM&CW, April 2013, Page: 30

MSPL resumes iron ore mining in Karnataka

MSPL Ltd's, which owned a flagship open cast iron ore mine, Vyasanakere Iron Ore Mine, on the outskirts of Hospet in Bellary district of the state, has resumed mining operations. In this connection the player has secured permission from the Karnataka Government's Director of Mines and Geology. The mine is one of the largest iron ore mine in the private sector with an area of

347.22 hectare, near Hospet with an annual production sanction of 0.91 million tons per annum. It may be recalled that the player had stopped mining operations in January 2009 after the mining issues in the state got entangled into a legal tangle. The resumption of mine with immediate effect follows several orders from the Supreme Court and after satisfactory completion of Reclamation and Rehabilitation works prescribed by the Supreme Court's

Ref. : NBM & CW, June 2013

CCI speeds up projects in the port sector

Stung by the dilly dallying procedural bottlenecks in the project clearance mechanism, the Cabinet Committee on Investment (CCI) has decided to approve a proposal for allowing fast-track security clearance to port projects and review the progress of highway projects in the country. In this connection, the committee is approving security clearance for the seaports.

Earlier this year, the government unveiled new norms under which security clearances granted to a company would be valid for three years. Under the norms, it is mandatory for the company to inform the Shipping Ministry about any changes in the management control and more than 10% change in the shareholding by any

shareholder within two weeks. The government plans to increase the country's port capacity to three billion tonnes from the present one billion tonnes. This would involve an investment of Rs 3 lakh crore by 2020, according to the Ministry's maritime agenda for 2020. Road Ministry, on the other hand, has fixed a target of giving 9,000km of projects in 2013-14. According to the plans more than 50% of the projects will be taken up on Engineering Procurement Construction (EPC) mode. In the year 2011-12, the road sector's performance was abysmal as award of projects declined to 1,933kms from the targeted 9,500km and is hopeful of completing 4,500km of road length during the current year, they added.

Ref. : NBM & CW, June 2013

JSW Steel and Ispat finalize merger

JSW Steel has recently completed the merger of JSW Ispat Steel and after the merger JSW Steel has become the second largest steel producer in the country after Steel Authority of India (SAIL) with 14.3 million tons capacity. The Bombay High Court had approved the composite scheme of amalgamation and arrangement amongst the two companies and their shareholders and creditors. Moreover, JSW Ispat is to transfer its Kalmeshwar undertaking and JSW Steel is to transfer its downstream undertaking to JSW Steel Coated Products. Besides, JSW Building Systems is to be

merged with JSW Steel. Post-merger, JSW Steel promoters will now hold a little over 35% stake in the unified company.

Ref.: NBM & CW, June 2013

PPP road projects get lax funding norms

Helping cash starved PPP road project developers the Department of Financial Services has tweaked funding norms whereby banks can start lending to public-private partnership (PPP) road projects if at least 80% of the land is made available by the national highways authority. Under the prior practice lenders had been insisting that the developers take complete control of the land before getting funds. A decision to this effect was taken by the Committee of Secretaries, an inter-Ministerial group, and the same has been conveyed to the banks concerned and the move is likely to ease

funding pressure for highway developers, especially on PPP projects. In highway development projects, the National Highways Authority of India (NHAI) acquires the land and makes them available to developers.

According to official sources, the NHAI had backed the proposal to allow fund disbursal once 80% land was available, saying that bankers should draw comfort from the fact that developers were being allowed to collect toll after 75% project completion. IIFCL, which lends to highway projects, also decided in its recent board meeting to start disbursing loans for road projects after 80% of required land is available. The move should ease fund flow to around 30 highway projects that were awarded in 2011-12 and 2010-11, but have not tied up funds. Barring six-odd projects, over 80% land was available for most of the others. For around a year now, banks have been demanding complete control of land for highway projects before disbursals of loans.

Ref. : NBM & CW, June 2013

Slope Compactor

"Surelia" make Slope Compactor it requires Two Nos. Compactor One for Upward and Second for Downwards.

It can efficiently work on slope ratio of 1:2 to 1:1.5, a pair

of compactors works on COUNTER BALANCE PRINCIPLE have to be linked via wire rope pulley, supported on loaded truck at the top. The two compactors with individual operator have to operate single lever simultaneously downward and upward direction from two ends of slope.

Ref. : Construction Technology, April, 2013, Page: 12

Geofoam

Geofoam is a product created by a polymeric expansion process resulting in a "foam" consisting of many closed, but gas-filled, cells. The skeletal nature of the cell walls is the unexpanded polymeric material. The resulting

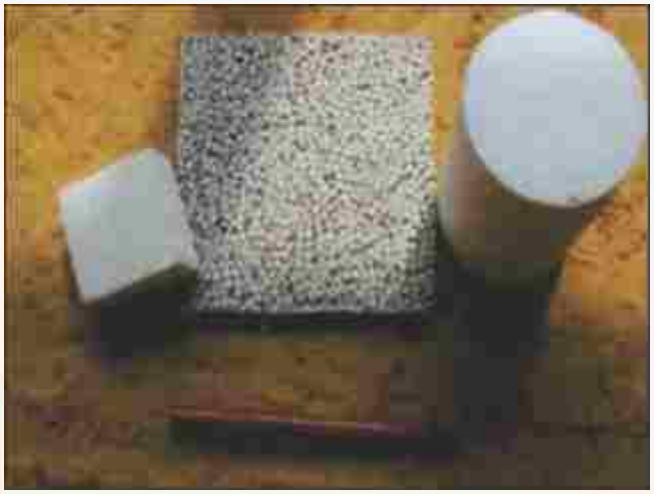

product is generally in the form of large, but extremely light, blocks which are stacked side-by-side providing lightweight fill in numerous applications. The primary function is dictated by the application, however separation is always a consideration and geofoam is included in this category rather than creating a separate one for each specific material.

Ref. : Construction Technology, January, 2013, Page: 82

Smartphone

BlackBerry (formerly RIM) has announced the release of its BlackBerry 10 operating system, as well as its first BlackBerry 10 smart phones, the Z10 and Q10, which come outfitted with assisted, autonomous and simultaneously GPS and with a Blackberry Maps application preloaded. TeleCommunication Systems. Inc, is provided map, local search, location services and navigation applications. The Z10 is equipped with a 4.2 inch touch screen and the Q10 has a 3.2 inch handset with a Blackberry's physical keyboard. Besides GPS, the phones have 4G connectivity, Bluetooth Smart, and NFC connectivity.

Ref : GPS World, Mar 2013, Vol. 24, No.3, Page: 27

"The Ultimate Solution to Brickwork & Plastering"

Fabtech Sterling Building Technologies Pvt. Ltd. is positioned as the technical leader for providing innovative building solutions in construction & material space. FABTECH STERLING BUILDING TECHNOLOGIES PVT. LTD. offers a full range of load

bearing and infill wall systems for residential, commercial and industrial applications. Its most premium offerings include Plaswall™, Plasmolite™ and Foamolite a range of building systems that deliver on SPEED,STREIMGTH and SAVINGS. These products have found strong acceptability in Philippines, Australia, Vietnam, Qatar, India and are spreading fast in Middle East and Africa.

PLASMOLITE

Fabtech Plasmolite holds much promise for the construction industry. Plasmolite has many benefits as compared with conventional concrete. Plasmolite saves you from the hassles of brickwork, hollow-block and plastering. It can be very well integrated with conventional columns, beams and pre - engineered buildings . Usage of this product leads to substantial weight reduction (dead-load), improved fire rating and maximum sound absorption. It also offers huge saving in raw material (no gravel) and in steel reinforcement. One has to see to believe the uniformly finished and thermally insulated walls with more strength and durability. These walls act as non-load bearing and have found wide acceptance for various buildings projects.

FOAMOLITE

Foamolite derived from foam concrete is a material which consists primarily of a cement based mortar mixed with at least 20% of volume air. It possesses high workability, low self-weight, zero consumption of aggregate, controlled low strength and excellent thermal insulation properties. It can have a range of dry densities, typically from 600 kg/m3 to 1600 kg/m3 and a range of compressive strengths, 1 MPa to 5 MPa.

APPLICATIONS

1. Floor Screed: Foamolite can be used for floor screeds, creating a flat surface on uneven ground and raising floor levels.
2. Void Filling: Foamolite is a perfect void filling material because of its placement characteristic.

3. Roof Insulation: Foamolite is used extensively for roof insulation and for making a slope on flat roofs. It has good thermal insulation properties and because it is lightweight foamolite does not impose a large loading on the building.
4. Road Sub-Base: Foamolite is being used road sub base on a bridge. Foamolite is lightweight so that the loading imposed on the bridge is minimised.

Ref. : MGS Architecture, May 2013

MYK LATICRETE Launches AAC Block Adhesive

With increasing use of Autoclaved Aerated Concrete (AAC) blocks in new age buildings and due to its highly absorbent nature, there emerges a need to use an adhesive which would hold these blocks in place. AAC Block Adhesive by MYK LATICRETE does exactly that and sticks to the best. It holds porous blocks together much more efficiently than the traditional fixing system does. It is designed for use with water to produce high strength thixotropic mortar for laying blocks or smoothing over the block work surface in layers of up to 12 mm thickness.

The suitable substrates for this adhesive are: Concrete Blocks, Cement Mortar Blocks/Bricks, Concrete Hollow Blocks, Aerated Lightweight Blocks, Cellular Concrete Blocks, and Fly Ash Bricks.

Some of the salient advantages using this adhesive include:

- Long working time

MYK LATICRETE Launches AAC Block Adhesive

With increasing use of Autoclaved Aerated Concrete (AAC) blocks in new age buildings and due to its highly absorbent nature, there emerges a need to use an adhesive which would hold these blocks in place. AAC Block Adhesive by MYK LATICRETE does exactly that and sticks to the best. It holds porous blocks together much more efficiently than the traditional fixing system does. It is designed for use with water to produce high strength thixotropic mortar for laying blocks or smoothing over the block work surface in layers of up to 12 mm thickness.

Harsco Rail

Harsco Rail has developed the TRT-909 Track Renewal System, which incorporates a number of functions in one piece of equipment. Introduced in June 2005, the TRT-909 is designed to remove and replace ties, pull and reclaim spikes, remove and collect rail anchors, remove and install rail, heat rail with induction rail heaters and automatically apply Pandrol rail fastenings.

The design concept is based on the company's 35 year experience of installing more than 20 million concrete ties with Harsco Rail's Model P811 track rehabilitation machines. The TRT 909 can be used with concrete, pre plated wood or steel ties. The system, which completes work on both rails simultaneously, has a production rate of about 0.25 mph. A crew of about 25 is typically supplied under a contract service agreement that include supervision, operation and maintenance of the equipment.

Ref. Progressive Rail roading, Issue : April, 2013, Page : 54

Herzog Railroad Services Inc.

Herzog Rairoad Services Inc.(HRSI) offers the multi purpose Machine (MPM) a six car machine with remote control operation from either end of the equipment or from the trackhoe. HRSI have been offering the MPM since 1999 and have several sets in service for various railroad customers. The MPM is a one operator, self propelled machine that offers the rail roads the ability to accomplish many tasks with just one piece of equipment."

The 500 foot long machine can carry up to 480 cubic yards of material. Each trackhoe is set up with a roto tilt articulating head and has the capability of reaching up to 27 feet from the track center. The machine's mobility, zero turn radius trackhoe and range of motion make it ideal for ditching, OTM distribution, OTM pick up, tie distribution, tie pick up, rail pick up, grading crossing work, bush cutting, tree thinning and snow removal all with just, one HRSI operator. The trackhoe on the MPM has the ability to crawl over the top of these various materials so it has continuous access to all of them.

Ref. Progressive Rail roading, April, 2013, Page : 56

It was for the first time that an 8 days course No. 13409 – Spl. Course on Steel Structure & Fabrication was planned from Monday to Monday. This course on Steel fabrication was organised with active cooperation from RDSO, Manmad Workshop and Construction organisation of ECR.

The participants were taken to Manmad Engineering Workshop in mid-week after giving basic knowledge. The participants were thereafter taken on study tour to Ganga Bridge construction site at Pantna and were shown the actual work of fabrication and bridge on this mega bridge. There were 29 participants in the course. Though the schedule was hectic but the participants were more than satisfied about the technical content topped with the fruitful field visit to the 'Mega Bridge'.

Strength performance of fly ash and slag mixtures using gypsum

The lower environmental impact and economic cost of cements made from waste materials makes them an attractive alternative to Portland cement. This research was undertaken to study the performance of cement made by sulfate activation of a basic oxygen slag and run-oo-station ash blended with red gypsum and plasterboard gypsum. Two-component and three-component mexes were tested as part of a systematic process of optimising for strength. All mixed had similar water to binder(w/b) ratio 0.3. The results showed plasterboard gypsum and red gypsum can be used with sulfate to form a sulfate-activated pozzolan basic oxygen slag run-of-station ash binder. Sample solutions were collected from a high-pressure through-flow test and analysed using inductive coupled plasma to measure the risk of leaching of heavy metals.

By: Seema Karami, Essie, Ganjian, Peter Claisse,, Homayoon Sadeghi Pouya,

Ref: ICE Vol.166, Issue CM2,April 2013, Page:80

Numerical Modeling of High-Speed Train/Track System to Assess Track Vibrations and Settlement Prediction

The circulation of trains at very high speeds (higher than 300 km/h) leads to important vibrations in the track and its environment. Concerning the track behavior, this dynamic cyclic loading conduces to the deterioration of its geometric quality, which progressively amplifies the vibration levels in a repeated process, leading to an increase in track lifecycle costs. Within this framework, this paper presents a dynamic numeral model that was built with this concern and was consistently validated with real experimental measurements at different maximum speeds, also above 300 km/h. The implementation in the model of long term estimations of plastic deformations accumulations is evaluated, as well as the track settlement evolution along the track and throughout millions of cyclic train passages. Different design alternative solutions are simulated: softening railpads, placing under-sleeper pds or ballast mats, or using bituminous subballast as an alternative to granular subballast. Critical analyses on the results obtained in the paper enable one to draw recommendations on the mitigation of track vibrations and maintenance interventions, that is, on the possible improvements to be made to ballasted high-speed track design considering its maintenance needs. DOI : 10.1061/(ASCE)TE.1943-5436.0000482. © 2013 American Society of Civil Engineers.

By : P. A. Ferreira and A. Lopez-Pita

Ref :Journal of Transportation Engineering, March 2013, Page: 330

Cost Estimating model for mode choice between light rail and bus rapit transit systems

A cost estimating model is developed for light rail transit (LRT) and bus rapid transit (BRT) systems to better aid transportation planners and decision makers in selection process. In evaluating transit systems, cost estimating has alsways been a major consideration. Without an applicable cost estimating model or methodology, the decision on the choice between LRT and BRT would cause significant controversy and difficulty in the early corridor planning stage. The model developed in this paper can be applied to estimate costs and compare the LRT and BRT systems that operate on various right-of-way categories, alignment configurations, and different given transit demand volumes. An example and comparative analyses illustrate how the model can be applied in real-world situations. DOI : 10.1061/(ASCE)TE.1943-5436.0000444. © 2013 American Society of Civil Engineers.

By: Lo Rosa Hsu.

Ref :Journal of Transportation Engineering, Jan. 2013, Vol. 139, No. 1, Page: 20

Accounting for network effects in Railway Asset Management

Abstract : System-level infrastructure management involves determining optimal maintenance, rehabilitation, and reconstruction activities for a system of facilities over a planning horizon to maximize the level of service subject to system constraints. In Railway networks, different types of facilities (such as tracks, and bridges) comprise the system, and maintenance of one facility may affect the maintenance of other facilities, both economically and functinally. Therefore, when developing an asset management system for railway networks, it is essential to take into account heterogeneity and interdependency in the network. In this paper, a two-stage, bottom-up methodology is formulated to capture these interdependencies and

heterogeneities in railroad infrastructure management. Numerical experiments are presented to examine the effects of economic and functional interdependencies on network optimization and to demonstrate the validity of the proposed model. The results show that accounting for heterogeneity and interdependencies at the system level can greatly influence the choice of activities and the estimated life-cycle cost. DOI : 10.1061/(ASCE)TE.1943-5436.00004477 © 2013 American Society of Civil Engineers.

By : Akitoshi Furuya and Samer Madanat, M.ASCE

Ref :Journal of Transportation Engineering, Jan. 2013, Vol. 139, No. 1, Page:92

Characterization of fly ashes for sulfate resistance

The sulfate resistance of mixtures containing six fly ashes was studied with reference to their chemical and mineralogical compositions. Quantitative analysis of the mineralogical composition of fly ashes was carried out through X-ray diffraction (XRD) using the Rietveld method of analysis. Bulk and glass composition of the fly ash particles was also determined by using scanning electron microscopy (SEM) and energy-dispersive X-ray analysis (EDXA). The sulfate resistance of fly ash mortars was evaluated using the ASTM C1012/C1012M test. The performance of each fly ash in the sulfate resistance test was related to the chemical and mineralogical composition of the fly ash and its position on the ternary (CaO-SiO2-Al2O3) diagram. The study showed that the nature of glass is an important factor in determining the sulfate resistance of fly ashmixtures in a sulfate environment.

By: Rajaram Dhole, Michael D.A.Thomas, Kevin J. Folliard, and Thano Drimalas

Ref :ACI Materials JournalVol. 112, No. 2, Mar-Apr 2013, Page:159

Pre-hardened crossings cut life-cycle costs.

Trails now underway in the Channel Tunnel are demonstrating that explosive head hardening of cast austenitic manganese crossings can extend their wear life to carry around one-third more tonnage, offering potential savings in life-cycle costs

This on track trial, as well as other examples, has confirmed the efficiency of using pre-hardened crossings, which can halve the cost of maintenance and reduce the need to interrupt traffic flow on busy routes. As a result, several major European railways and infrastructure managers have expressed interest in installing explosive pre-hardened crossings.

Ref. : Railway Gazette, Feb. 2013, Page : 48 & 50

Analysis of Relationship between Time and Cost Overruns in some Infrastructure Projects

Projects undertaken in India have grown in size and large infrastructure projects are being executed in various parts of the country. Indian construction industry is expected to grow at 25-30% during 2010-2012. World Bank estimates suggest that Indian's urban population will be close to 500 million by 2017, putting massive pressure on civic infrastructure. Risk Management is gaining significance with increasing number of projects and project complexities in Indian scenario. Risk level in a Project varies depending on the nature of the project and the parties that are involved in the project. Impact of risk can be positive or negative and therefore assessment of risk should be ongoing and dynamic. Previous research findings related to risk management in Indian construction industry are referred and significant findings are discussed. Researchers in the past have identified schedule and cost over run as major problems associated with Indian construction industry. Data related to schedule over run and corresponding cost over run in Indian infrastructure projects of the past 20 years have been collected and presented in this paper. The paper attempts to analyze whether the estimation of project time and cost is realistic in Indian Infrastructure projects. Particular attention is paid to schedule and cost over run in projects, associated risks and mitigation measures. Pearson's correlation coefficient is used in understanding the correlation between schedule and cost overrun. The result is confirmed with the test findings using ANNOVA technique. Though there is a strong correlation between time and cost over run the drivers of time and cost overrun are not the same. While the time over run is attributed to scope changes, delay in finalization of tender documents and short bid submission time, lack of commitment of project participants, poor coordination etc., cost overrun is attributed to more variations between quantities estimated and actually executed. The research outcome suggests that Indian construction industry needs to employ innovative technologies and better contract management strategies to overcome surprise and challenges as the project progresses. A shift from the current practices towards electronic tendering process, online contract bidding document etc can make the bidding process transparent and evaluation more realistic in nature.

By : Hariharan S. and P. H. Sawant.

Ref. : NICMAR, April-Sept. 2012, Page: 5

Safety assessment of a masonry arch bridge: Field Testing and Simulations

There are huge number of arch bridges on Indian Railways constructed few decades back to the loading standards and traffic prevailing in those times. The assessment of the strength is required to be done to determine the residual structural strength and identify strengthening measures to be taken for safe performance. This is necessitated due to increased loads, traffic and in turn due to due to gauge conversion or otherwise.

This paper involves study of brick masonry arch bridge in the South Western Railway constructed in 1870 for Meter Gauge. The section was converted to Broad Gauge. This bridge was to be checked for proposed increased loading of 25T. The bridge chosen is a two span bridge with span of 17.3 and 17.7m.

This paper gives a very scientific method to do this. The safety of an in-service brick arch railway bridge was assessed through field testing and finite-element analysis. Different loading test train configurations were used in the field testing. The response of the bridge in terms of displacements, strains, and acceleration in measured under the ambient and design train traffic loading cnditions. Non linear fracture mechanics-based finite element analysis was performed to assess the margin of safety. A parametric study is done to study the effects of tensile strength on the progress of cracking in the arch. Furthermore, a stability analysis to assess collapse of the arch caused by lateral movement at the springing of one of the abutments that was elastically supported is carried out. The margin of safety with respect to cracking and stability failure was computed. Conclusions were drawn with some remarks on the state of the bridge within the framework of information available and inferred information.

The analysis showed that the bridge was capable of carrying axle load of 25 T and margin of safety was 1.8 for crown displacement. This provides Indian Railway with a new method of strength of arch bridges.

By: J. M. Chandra Kishen, M.ASCE; Ananth Ramaswamy, M.ASCE; and C. S. Manohar

Ref : Journal of Bridge Engineering, Feb 2013, Vol. 18, No. 2, Page:162

Measuring Deflections of a Short-Span Railway Bridge Usinga Robotic Total Station

Deflection of short span (stiff) bridges (deflections lower than 10 mm) under moving load has always been a challenge for Engineers. A robotic total station (RTS) for robotic theodolite positioning system (TPS) was used for the first time to measure the deflection of a short-span bridge in response to passing trains. The RTS measurements were taken with total station aimed at a reflector which was fixed on one of the railings of the mid-span of the Steel Bridges in Greece. Deflections were recorded under three conditions (i) with no load on the bridge giving the measurement noise, (ii) under light single wagon passenger train and (iii) under 7 wagon freight train. Deflections (noise) under no load condition were found to be around +1.3 mm and those when small/larger trains were passing were of the order of 2.5 - 6mm. These results confirm previous experiments and indicate that, under certain conditions (mostly favorable atmospheric conditions), on RTS can be used for monitoring dynamic displacements of relatively stiff bridges, and as a useful tool for structural health monitoring.

By : Panos A. Psimoulis and Stathis C. Sitros

Ref : Journal of Bridge Engineering, Feb 2013, Vol. 18, No. 2, Page: 182

Cost Overruns and failure in project management: understanding the roles of key stakeholders in construction projects

Cost overruns and failures in project management are too numerous to ignore. The malaise is so deep that anyone studying and understanding the role of various stakeholders and causes would be welcome. The authors of this paper have done the study of projects in Australian construction industry. Nevertheless, the underlying responsibilities of the key stakeholders (clients, consultants, and contractors) in managing this chronic problem generally remain unclear. By performing an in-depth analysis of the roles and responsibilities of these key stakeholders, this research is intended to unfold the industry wide perception of cost performance being heavily reliant on the contractor's performance alone. Based on a through literature review and relevant industry inputs, 73 attributes associated with cost performance were identified for investigation. Based on the relative importance weighing technique on 48 selected attributes, planning and scheduling deficiencies have the highest impact on cost performance from clients, consultants, and contractors' perspectives. Confirmatory factor analysis on the combined responses across all three groups suggests that robust control procedures and adequate programming, along with efficient design and effective site management, are the most critical factors. These factors are primarily associated with the responsibilities of contractors and consultants for managing cost overruns in projects. However, the client's responsibility in facilitating effective management of these factors within the project environment is crucial.

By : R Preetha, G.V.V.S. Kishore, A. K. Laharia & C. S. Pillai

Ref: Journal of Bridge Engineering and Management, Mar 2013, Vol. 139, No. 3, Page : 267

Heat evolution of fly ash concrete

Use of fly ash in cement concrete has become common phenomenon. Fly ash is used in replacement of cement from environmental considerations, durability considerations and economical considerations (incidental). One of the important advantages of use of fly ash in mass concrete works is low heat of hydration. In this paper authors have studied this aspect for three types of concrete mixes – 3 for concrete grade M50 and 3 for concrete grade M35. In these 3 mixes for each grade; one is with 0% fly ash and another with 40% fly ash and 3rd with 50% fly ash. The mix proportions are given in table 1 below: -

Table 1 - Mix proportions of M50 grade concrete

Mix Design	Binder				Aggregates, kg		Water kg	Admixture %	Sand %
	Total, kg	Cement kg	Fly Ash		Coarse	Fine			
			Quantity, kg	% of binder					
585 F 50	585	292.5	292.5	50	1038	597	163.8	1.6	36.4
525 F 40	525	315.0	210.0	40	1083	676	153.0	1.6	38.0
410 F 0	410	410.0	0	0	1083	794	151.7	1.3	40.0

Table 1 - Mix Proportions of M35 grade concrete

Mix Design	Binder				Aggregates, kg		Water kg	Admixture %	Sand %
	Total, kg	Cement kg	Fly Ash		Coarse	Fine			
			Quantity, kg	% of binder					
420 F 50	420	210	210	50	1140	729	147.0	1.6	39.0
375 F 40	375	225	150	40	1130	235	143.0	1.8	41.0
320 F 0	320	320	0	0	1172	265	144.0	0.9	43.0

The graph showing strength achieved up to 120 days is shown below:

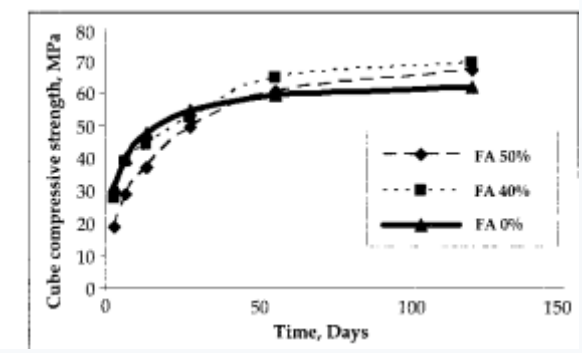

Fig 1 (a) Compressive strength with varying replacement level of cement M50

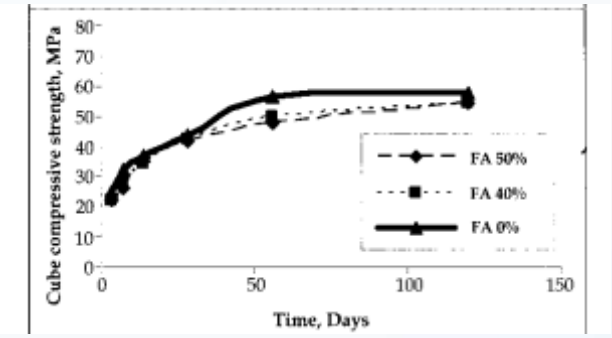

Fig 1 (b) Compressive strength with varying replacement level of cement M35

The trials were done by casting blocks of size 1.0m x 1.0m x 0.75m, cast both with control concrete mixes and fly ash concrete mix. Calibrated Resistance Thermometer Detectors (RTD) were placed in the concrete block as shown below.

Temperature was measured hourly for first 72 hours and after every 2 hours for 7 days. Atmospheric time and relative humidity was also measured during this period. Figure below gives schematic arrangement for the test.

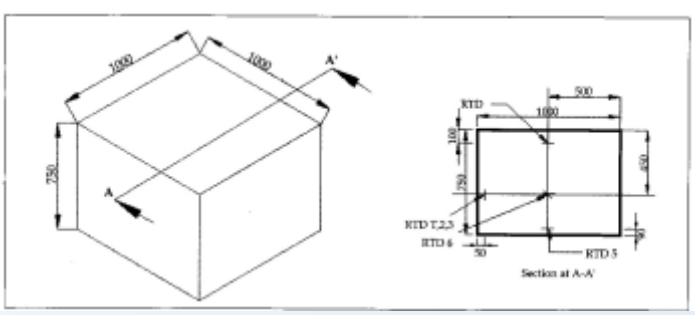

Fig 2 Schematic for heat hydration specimen

Ref : Indian Concrete Journal, Mar. 2013, Vo. 87, No. 3, Page 7-16.

Explaining knowledge-sharing intention in construction teams in Hong Kong

Lot of knowledge is created in the organizations by virtue of the works being done by them. As such it is not the organizations but they rely on their employees to create, share and apply knowledge in the work processes. The development of the organizations and the competitive edge they enjoy is a result of continual interactions and knowledge sharing between individuals in the working groups or even across the different units. All this knowledge creation is beyond what an individual can create. It can be said that individual knowledge sharing is fundamental to any successful knowledge management initiative. Construction projects are the areas where large amount of knowledge is created by the experience of the individual in the process of execution of works. And these construction teams dissolve once the project gets completed. Important knowledge identified and learned by team members can also be transferred and applied in other projects, thereby avoiding reinventing the wheel.

Knowledge can be classified in two broad categories – explicit and tacit. Knowledge is normally embedded in the mind of individuals and to communicate one's knowledge to others, it has to be codify in explicit form – action, speech, drawing and article; that can be accessed by others. There are two difficulties in this - (i) Individuals would be required to invest time to do this and (ii) Individuals may be unwilling to share the knowledge as they lose the Power. Motivating individuals to do this is a challenge. The benefits of knowledge sharing on the other hand can be organizational reward, reciprocal relationship and sense of self-worth. Individual will share knowledge only when the perceived benefits outweigh the negatives. Role of superiors, trust among colleagues and culture are factors which also play role in this. Information technology has reduced temporal and physical distance.

By : Peihua Zhang and Fung Fai Ng.

Ref : Journal of Bridge Engineering and Management, Mar 2013, Vol. 139, No. 3, Page. 280

TURNING OUT GREAT TURNOUTS

A new design lifts wheels over the main line rails

Progress Rail Services, BNSF Railway, and

Transportation Technology Center, Inc. have developed a Continuous Main Line Rail Turnout where diverging traffic is low speed and low volume. The prototype was evaluated under 39-ton axle load traffic at the Facility for Accelerated Service Testing (FAST). After a short proof of concept test, the same turnout has been installed in revenue service.

The switch configuration of the new design (Figure 1) differs from conventional design by having both fixed stock rails on the main line route, thus its design name "Continuous Main Line Rail Turnout". The conventional switches have one fixed stock rail and one moveable switch point on each route. Both routes have running surface discontinuities on one rail. Wheels transition from stock rail to switch point on one rail of each route. The moveable switch points are both on the diverging route. Note that on the continuous main line rail turnout, one switch point is located on the gauge side of the left stock rail, and the other switch point is located on the field side of the right stock rail.

The continuous main line rail turnout design is also called a "vertical switch" because it functions by lifting wheels over the main rail lines, instead of providing a gap in the main line rail for wheel flanges to pass through. This switch is functional counterpart of the lift frog design that has been successfully implemented by North American freight railways. Like the lift frog, it strongly favors the

main line in terms of ride quality and allowable speeds. This type of switch has potential applications for the set-out tracks and industrial sidings accessed from the main line.

Ref : Railway Age, April 2013, Page: 51 – 53

Predicting the compressive strength of fly ash concrete based on cement replacement levels

Everybody has heard about use of fly ash in cement concrete; though in Railway we still do not permit use of fly ash in PSC works. The world has however gone ahead and started using High Volume Fly Ash Concrete (HVFAC). HVFAC is concrete mixture containing 50% or more fly ash measured as mass of cementitious material. Such mixes show high workability, high ultimate strength, high durability and low heat of hydration.

In the experiment the authors have prepared fly ash concrete cubes using water content of 140 kg/m3 and total cementitious (Cement + fly ash) material of 280 kg/m3. The properties of fly ash which were used are given in table below:

Table 1: Properties of fly ash

(a) Physical properties				
Specific gravity	Percentage finer than 45 µ-m	Surface area, m2/kg	Loss on ignition, %	Lime reactivity, Mpa (IS 1727:1967)
2.40	0.00	1134	0.9	6.23

(b) Chemical properties, %							
Al_2O_3	Fe_2O_3	SiO_2	MgO	SO_3	Na_2O	Total Chlorides	CaO
31.23	1.5	61.12	0.75	0.53	1.35	0.06	3.20

Cubes were cast with varying %age of fly ash in replacement of cement from 20% to 80%. The mixed proportions are tabulated below:

Table 2. Mix proportions of concrete; w/b (water/binder ratio) = 0.5

Ingredients, kg/m^3	**Fly ash replacement level in percentage**						
	20	**30**	**40**	**50**	**60**	**70**	**80**
Water	140	140	140	140	140	140	140
OPC 53 Grade	224	196	168	140	112	84	56
Fly Ash (FA1)	56	84	112	140	168	196	224
Crushed granite, Coarse aggregate	1178	1178	1178	1178	1178	1178	1178
Sand (Fine aggregate)	806	798.2	793.0	785.2	777.4	772.4	764.4
Fresh density	2404	2396.2	2391	2832.2	2375.4	2370.4	2362.4
FA/C(Fly ash/Cement)	0.250	0.428	0.667	1.000	1.500	2336	4.000
(CAgg+FAgg)/Cement	8.857	10.083	11.732	14.023	17.459	23.219	34.686
W/(W+C+FAgg+CAgg)	0.058	0.058	0.059	0.059	0.059	0.059	0.059
Super plasticizer, % (Naphthalene based)	2.6	2.1	1.8	1.5	1.2	1.0	0.8

W=water, C=cement, FA=Fly Ash.

The structures which were cast using the HVFAC in the field have seen to be crack free even after the passage of 15 years. Interestingly, there are no methods available to predict the compressive strength of concrete based on replacement level of fly ash. The author in this paper has tried to develop phenomenological models based on these tests to predict compressive strength of concrete based on replacement level of fly ash. The curve showing the strength variation with fly ash replacement is given below:

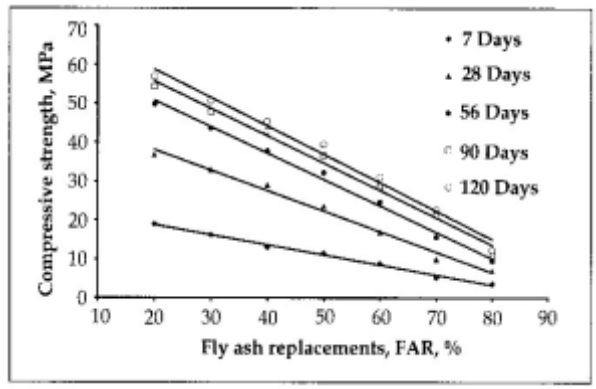

Fig.1 Strength variation – Fly ash replacement at water to binder ratio of 0.5

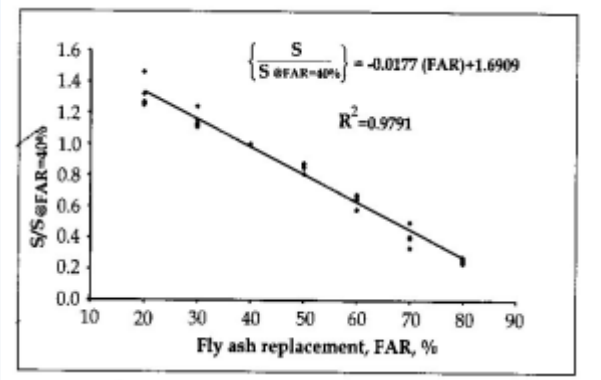

Fig.2 Graphical representation of Model

Graph showing graphical model using results of 40% replacement of fly ash as the basis as given in Fig. above. The conclusions of the study are

- Compressive strength of fly ash concrete decreases with increasing replacement level of fly ash.
- Structural concrete can be produced using high replacement of fly ash but curing period would be longer.
- The phenomenological model can be used to predict the compressive strength with replacement of fly ash ranging from 20% to 80%, if other parameters are maintained the same for the workable concrete.

By: Radhakrishna

Ref : Indian Concrete Journal, Mar. 2013, Vo. 87, No. 3, Page : 17-23

High strength self compacting concrete using mineral admixtures

Self Compacting Concrete (SCC) was first developed in Japan with an objective to improve durability of structures. Mechanical compaction used in the conventional concrete is often the cause of mix segregation posing challenges to uniformity of material quality in heavily reinforced zones. SCC ensures adequate surrounding of the reinforcement by concrete thereby ensuring durability.

High strength concretes ranging from 50-130 N/mm2 have been used all over the world in tall buildings and long span bridges. Building/Bridges made of high strength concrete are usually densely reinforced. If high strength concrete is made self-compacting, the production of densely reinforced structure would be an easy job. The authors have done comprehensive study for finding out the properties of high strength SCC by casting 10 kinds of concrete mixes with fly ash and micro silica. Details of these mixes are given in table below:

Table 1 : Quantities of materials for 1m3 of high strength SCC mixes

Mix	Cement, kg/m3	Fly ash, kg/m3	Micro silica, kg/m3	Water kg/m3	Coarse, aggregate, kg/m3	Fine SP, aggregate, kg/m3	SP, kg/m3	VMA, kg/m3
Mix 1	500	150	50	154	769.85	740.80	10.5	0.56
Mix 2	500	125	75	154	769.52	740.48	10.5	0.56
Mix 3	500	100	100	154	769.18	740.16	10.5	0.56
Mix 4	500	125	75	154	769.52	740.48	10.5	0.56
Mix 5	500	125	75	154	769.63	740.59	10.5	0.56
Mix 6	500	125	75	140	788.07	758.33	10.5	0.56
Mix 7	500	100	100	140	787.73	758.01	10.5	0.56
Mix 8	500	125	75	140	788.07	758.33	10.5	0.56
Mix 9	500	125	75	140	790.40	781.44	13.3	0.35
Mix 10	500	125	75	154	774.98	766.19	11.2	0.35

The properties of wet concrete are given in table 2 below.

Table 2 : Fresh concrete properties of high strength SCC mixes

Grade	Slump flow, mm	T500, sec	V-funnel, sec	V-funnel T5min, sec	L-Box, h2/h1
Mix 1	600	8.93	13.85	19.00	0.55
Mix 2	593	9.80	19.40	28.00	0.60
Mix 3	559	10.30	21.00	37.00	0.54
Mix 4	574	9.60	23.00	41.00	0.62
Mix 5	610	6.30	17.00	25.00	0.69
Mix 6	540	21.05	50.00	74.00	0.49
Mix 7	536	26.00	59.00	78.00	0.44
Mix 8	565	25.00	61.00	81.00	0.58
Mix 9	653	5.00	13.00	18.00	0.80
Mix 10#	665	4.50	12.00	14.00	0.90
EFNARC*	**650-800**	**2-5**	**6-12**	**11-15**	**0.82-1.0***

*T20: 1-2s; T40:2-3s #T20:1s; T40:2s

EFNARC – European Federation of National Associations Representing Producers and Applicators of specialist building products for Concrete

The compressive strength results are given in Table 3 below : -

Table 3 : Compressive strength of high strength SCC mixes at 7 day

Compressive Streingth at 7 day, N/mm2							
Sample	**1**	**2**	**3**	**4**	**5**	**6**	**Average**
Mix 1	71.78	72.39	77.85	79.24	80.12	76.72	76.9
Mix 2	84.12	80.18	82.39	83.78	81.65	85.88	83.0
Mix 3	75.17	76.67	73.67	72.27	70.49	79.73	74.7
Mix 4	87.29	82.21	90.46	87.06	83.48	81.53	85.3
Mix 5	89.21	88.25	84.21	87.28	89.58	89.41	88.0
Mix 6	83.25	81.18	81.41	82.18	80.18	80.62	81.5
Mix 7	77.65	78.12	79.48	77.97	81.82	74.46	78.3
Mix 8	71.92	74.31	72.17	71.92	69.97	79.95	73.4
Mix 9	79.21	77.45	78.98	76.98	78.22	71.22	77.0
Mix 10	93.38	92.64	95.49	93.35	92.46	93.39	93.5

Compressive Streingth at 28 day, N/mm2							
Sample	**1**	**2**	**3**	**4**	**5**	**6**	**Average**
Mix 1	82.18	81.78	84.64	83.71	79.49	87.12	83.15
Mix 2	89.95	91.78	93.12	89.23	88.29	93.58	90.99
Mix 3	88.28	84.78	90.78	84.25	88.23	85.59	86.99
Mix 4	101.32	96.51	99.29	98.28	100.31	103.33	99.84
Mix 5	100.21	101.23	98.45	98.38	99.35	100.94	99.76
Mix 6	89.92	88.45	91.78	89.92	81.96	91.85	88.98
Mix 7	84.62	85.12	88.25	79.12	81.25	85.28	83.94
Mix 8	86.32	84.91	83.96	84.25	83.41	89.37	85.37
Mix 9	91.45	90.76	88.29	97.91	86.97	91.38	91.13
Mix 10	117.18	116.92	118.21	117.12	116.92	115.83	117.03

From the study the authors have concluded that –

- The high strenth SCC mixes with the addition of 15% micro silica and 25% fly ash gave an optimum strength for M100 grade
- The compressive strength of M100 grade concrete monitored upto 90 days showed an increase of 9 to 19%, over its 28 day strength. Similarly, the split tensile strength and flexural strength increased by 4 to 12% compared to the 28-day strength.

We on Indian Railways should consider extensive use of SCC as the supervision of compaction is very difficult, particularly in scattered works.

By S. Sesha Phani, Seshadri SekharT., Srinivasa Rao and P. Sravana

Ref : Indian Concrete Journal, Mar. 2013, Vo. 87, No. 3, Page: 42-48

Mechanical properties of hybrid fibre reinforced high performance concrete

Conventional concrete fails to meet the requiements of structures like water tanks, marine structures etc, due to its relatively poor permeability and poor resistance to thermal cracking, chemical attack and weathering.

This paper describes the experimental work on Hybrid Fibre Reinforced High Performance Concrete using three types of fibres namely steel, glass and polyester fibres of a reputed brand. Silica fume was added as a mineral admixture to partially replace the cement in concrete and a super plasticizer was used to get the desired workability. A comparison with steel fibre reinforced concrete and plain concrete showed significant improvement in the strengths of the hybrid fibre reinforced concretes due to the inclusion of both fibres and silica fume.

It has been recognized that adding small, closely spaced and uniformly dispersed fibres to concrete serves to arrest cracks and improve its properties under static and dynamic loading. In fact, fibre reinforced concretes have been made by using a variety of fibres such as steel fibres, polypropylene, polyester, nylons, asbestos, glass and carbon.

Hybrid fibre reinforced concrete is produced by combining different types of fibres. An optimized combination of two or more types of fibres produces a composite with better engineering properties than the individual fibres do. Fibre combinations improve the impact resistances, fatigue endurance, and shear strength by increasing the crack resistance, ductility, energy absorptions or tougnness of concrete.

Silica fume 7.5% by weight of cement was added as partial replacement of cement in order to get high performance concrete. SNP (Sulphonated Naphthalene Polymer) based plasticizer was used. M30 grade concrete mix was designed as per IS-10262:1982. The mix proportion at water cement ratio 0.40 was 1:1.26:2.74. Three kinds of concrete using different combination of fibres were prepared as explained below, along with the test results in table below.

(i) The round crimped Steel fibres 1% by volume of concrete having 0.5mm diameter, 30 mm length and aspect ratio 60 was used to get steel fibre reinforced concrete (SFRC).

(ii) The anti-crack high dispersion alkali resistant glass fibre 0.03% by volume of concrete having filament diameter 14 microns, 12 mm length and aspect ratio 857.1 was used in addition to steel fibre to prepare hybrid fibre reinforced concrete -1 or HFRC-1.

(iii) Polyester fibres of a reputed brand at 0.02% by volume of concrete having 0.035 mm diameter, 12 mm cut length and aspect ratio 343 was used in addition to steel fibre to prepare hybrid fibre reinforced concrete - 2 or HFRC-2.

Test results of the specimens using fibre and fibre combinations

No.	Property	PCC	SFRC	HFRC-1	HFRC-2
1	Cube compressive strength, N/mm2	45.1	54.9	61.33	58.2
2	Cylinder compressive strength, N/mm2	33.95	42.44	45.27	44.13
3	Split tensile strength, N/mm2	2.82	3.67	4.24	3.73
4	Flexural strength, N/mm2	4.7	5.88	6.68	6.2
5	Young's modulus, N/mm2	26000	27000	28500	27500

The conclusions reached by the authors are

- The addition of fibres reduced the workability of concrete requiring increased dosage of super plasticizer
- Strength of concrete increases with addition of fibres irrespective of their type. Concrete with two or more fibres have higher strength as compared to mono fibre RCC.
- Micro fibres like glass and synthetic reduce plastic shrinkage cracks a t early stage and macro fibres like steel act as crack arrestors at later stages.

By : K. R. Muthuswamy and G. S. Thirugnanam

Ref : Indian Concrete Journal, April 2013, Vol. 87, No. 4, Page: 50

Calendar of Courses 2013 (Revision - VI)

Course No.	From	To	Name of course	Course Director
Probationary Courses				
13005	26.08.13	01.11.13	IRSE Phase-II (P)	SPB1
13006	26.08.13	01.11.13	IRSE Phase-II (Q)	SPW
13007	18.11.13	22.11.13	IRSE Posting Exam	SPB1
INTEGRATED COURSES				
13102	29.04.13	11.07.13	Integrated	PTM
13103	15.07.13	26.09.13	Integrated	PT
13104	30.09.13	19.12.13	Integrated	PB
SR. PROFESSIONAL/SAG REFRESHER COURSES				
13203	22.07.13	30.08.13	SAG Refresher course	SPW
13204	18.11.13	27.12.13	SAG Refresher course	SPT2
13206	20.05.13	12.07.13	Sr. Prof. Dev. Course	SPW
13207	15.07.13	06.09.13	Sr. Prof. Dev. Course	SPT2
HAG/SAG/SEMINARS/WORKSHOPS/MEETINGS				
13306	18.07.13	19.07.13	CAO/C Seminar	SPB2
13307	25.07.13	26.07.13	Seminar for CE/TP	PT
13308	22.08.13	23.08.13	Training Seminar	DN
13309	28.11.13	29.11.13	CE/TMs' Seminar	SPT2
SPECIAL COURSES (TRACK/BRIDGES/WORKS)				
13411	24.06.13	05.07.13	Course for Construction Engineers	PB
13412	08.07.13	12.07.13	TMS	SPB2
13413	15.07.13	19.07.13	Rail Wheel Interaction & derailments	PTM
13414	29.07.13	02.08.13	PSC construction	SPB1
13415	05.08.13	08.08.13	Land Management	SPW
13416	12.08.13	16.08.13	Rail Grinding	SPT2
13417	18.11.13	22.11.13	Green Building, Unified SOR & IRPSM	DN
13418	25.11.13	29.11.13	Rail Wheel Interaction & derailments	PT
PSU / OTHER COURSES				
13603	01.07.13	12.07.13	Trainers (P.Way)	APE
13604	25.11.13	20.12.13	Course for ITEC/SCAAP	SPB2
AWARENESS COURSES				
13709	01.07.13	05.07.13	Awareness for IRAS	SPP
13712	05.08.13	08.08.13	Awareness for IRSEE	AP
13713	12.08.13	16.08.13	Awareness for IRTS	PTM
13714	19.08.13	23.08.13	Awareness for IRTS & RPF	PT

…….Continued in next issue

INDIAN RAILWAYS INSTITUTE OF CIVIL ENGINEERING, PUNE-411001

CALENDAR OF COURSES 2013 CHART (Revision - 6)

MONTH	DECEMBER '12					JAN.2013				FEBRUARY				MARCH				APRIL					MAY				JUNE				JULY					AUGUST				SEPTEMBER					OCTOBER				NOVEMBER				DECEMBER				JAN.2014				FEB.2014				MAR.2014			
DATE (MONDAY)	3	10	17	24	31	7	14	21	28	4	11	18	25	4	11	18	25	1	8	15	22	29	6	13	20	27	3	10	17	24	1	8	15	22	29	5	12	19	26	2	9	16	23	30	7	14	21	28	4	11	18	25	2	9	16	23	30	6	13	20	27	3	10	17	24	3	10	17	24
IRSE COURSES																																																					PE/O																			
2010 Exam batch	007																					003				004																										007																			
2011 Exam batch							13001 Phase-I Group P															PE				PO														13005 Phase-II Group P															INT																			
2012 Exam batch		008												13002 Phase-I Group Q																										13006 Phase-II Group Q														008																			
INTEGRATED COURSES	12104 Integrated					12104 Integrated																13102 Integrated					13102 Integrated																13104 Integrated								13104 Integrated																			
										13101 Integrated								13101 Integrated																13103 Integrated					13103 Integrated																				13105 Integrated								13105 Integrated							
SR.PRO/DEV COURSES	12204 Ref.Cr.for SAG					201						201											202					202						203				203														204					204															
					204													205 SPDP							206 SPDP								207 SPDP																											208 SPDP													
HAG/SAG/ SEMINARS																																																																												
	310 CGE											301CPDB			302 FD							303 CTE			304 CBE							306 CAO	307 TP				308 CGE																309 TM																							
SPECIAL COURSES				IB	428					PX	RF				402			TM					TMS	407 CA			409	410		411 CE	412	413		414	415	RG															GB	RW	RG		US	422 C&A																
				427	RW	BD 401				403	404				US			405					406				SS	MS			TMS	RW		PS	LM	416															417	418	419		421																
PSU & OTHER COURSES						601	NTPC																																																																	
							602 IRCON																																														604 ITEC/SCAAP				605 ITEC/SCAAP															
TRG.FOR TRAINERS																																																																										
																															603 PW																																														
AWARENESS COURSES												701								703			704		706		707			708	709					712	713																715		716																		
FIELD CRS.																																																																												
COURSES / WK	4	2	2	2	2	4	4	4	3	3	4	4	3	3	3	2	3	4	3	4	3	3	4	3	4	2	4	4	3	4	4	3	4	4	3	4	4	2	4	3	3	3	3	3	3	3	3	3	0	0	4	4	4	3	4	4	4	3	3	2	1	2	1	1	1	1			
OFFICER / WK						80	95	95	75	100	100	100	95	95	70	95	80	100	80	100	65	95	85	45	85	60	85	85	80	100	100	60	100	100	80	100	100	75	100	80	100	100	100	80	80	100	80	80	0	0	66	80	80	110	40	80	80													

MONTH	DECEMBER '12					JAN.2013				FEBRUARY				MARCH				APRIL					MAY				JUNE				JULY					AUGUST				SEPTEMBER					OCTOBER				NOVEMBER				DECEMBER				JAN.2014				FEB.2014				MAR.2014			
DATE (MONDAY)	3	10	17	24	31	7	14	21	28	4	11	18	25	4	11	18	25	1	8	15	22	29	6	13	20	27	3	10	17	24	1	8	15	22	29	5	12	19	26	2	9	16	23	30	7	14	21	28	4	11	18	25	2	9	16	23	30	6	13	20	27	3	10	17	24	3	10	17	24
MAIN COURSES	IRSE COURSES									INTEGRATED				REF. SAG				SR.PROF.DEV.PROG.					HAG/SAG SEMINARS								PSU/TRG.TRAINERS									AWARENESS FOR PROBATIONERS																																			
COURSE No.	001	002	003	004	005	006	007	008		101	102	103	104	105	201	202	203	204	205	206	207	208			301	302	303	304	305	306	307	308	309		601	602	603	604	605		701	702	703	704	705	706	707	708	709	710	711	712	713	714	715	716													
WEEKS / DAYS	8	8	1	1	10	10	1	1		11	11	11	11	11	6	6	6	6	8	8	8	8			2D	2	2	2	2	2	2	2	2		1	3	2	4	4		1	1	1	1	1	1	1	1	1	1	1	1	1	1	1	1	SPECIAL COURSES													
SEATS PLANNED	35	35	70	70	35	35	6	70		25					16 / 23										60	20									15	15	20	15		20																					20											
SEATS FOR CALL LETTER	35	35	70	70	35	35	6	70		45					16 / 23										60	20									15	15	20	15		30																					20											

	Mid-break	Spl.Courses	C.No.	C.No.	Wks.		Spl. Courses	C.No.	C.No.	Wks.		Awareness Courses	C.No.	C.No.	Wks.
BD	Bridge Design Asstt.		401		3	PS	PSC Construction	414		1	AS	Accounts Service	706	709	1x1
CE	Construction Engrs.		411		2	RF	Rly.form.& GeoTec.Invest.	404		1	EE	Electrical Engg.	704	705	1x2
CA	Contracts & Arbtrn.		407	422	2	RG	Rail Grinding	416	419	1	ME	Mechanical Engg.	707	708	1x2
GB	Green Building		417		1	RW	Rail Wheel Inte.& Der.	413	418	1	PS	Personnel Service	702		1x2
LM	Land Management		415		1	SS	Steel Structure & Fabrication	409		1	SE	Signal Eng.	701	703	711	712	1x4
PX	Laying of Points & Xing		403		1	TM	Tr.M/Cs & Small Tr.M/Cs	405		1	SS	Stores Service	715		1x1
MS	Modern Surveying		410		1	TMS	Tr. Monitoring System	406	412	1	TS	Traffic Service & RPF	713		1x2
PM	PMCs		408		2	US	USFD	402	421	1					

NOTES - MODIFICATIONS

1	13402	Special Course on USFD postponed to 11.03.2013 (Revision-1, 24.12.12)
2	13403	Laying of Points & Crossings, Planng of yards and design of track using MX Rail (Postponed)
3	13405	Spl. Course on Tr.M/c.& STM postponed to 01.04.13 to 05.04.13 (Rev.2)
4	13415	Spl. Course on Land Managerment will conclude on 08.08.2013 (Rev.2)
5	13712	Awareness Course for IRAS will conclude on 08.08.2013 (Rev.2)
6	13702	Awareness Course for IRPS Cancelled 04.04.2013 (Rev. 3)
7	13711	Awareness Course for IRSSE Cancelled 04.04.2013 (Rev. 3)
8	13406	TMS Eligibility restricted to some div. 04.04.2013 (Rev. 3)

NOTES - MODIFICATIONS

9	13206	Sr. Professional Dev. Course bifurcated in 13206'A', 'B' and 'C' 04.04.2013 (Rev. 3)
10	13408	Spl. Course for PMCs Cancelled due to poor nomination 09.05.2013 (Rev. 4)
11	13705	Awareness Course for IRSEE Cancelled 09.05.2013 (Rev. 4)
12	13710	Awareness Course for IRPS Reallocated to IRSEE 09.05.2013 (Rev. 4)
13	13712	Awareness Course for IRSSE Reallocated to IRSEE 09.05.2013 (Rev. 4)
14	13305	PCE Seminar Postponed, dates will be decided later 06.06.2013 (Rev. 5)
15	13710A	wareness Course for IRPS has been cancelled 10.07.2013 (Rev.6)
16	13714	Awareness Course for IRTS & RPF has been cancelled 10.07.2013 (Rev.6)