ज्ञान ज्योति से मार्गदर्शन

To Beam As A Beacon of Knowledge

BRIDGE INSPECTION AND MAINTENANCE

September 2014

INDIAN RAILWAYS INSTITUTE OF CIVIL ENGINEERING
PUNE 411001

ज्ञान ज्योति से मार्गदर्शन

To Beam As A Beacon of Knowledge

BRIDGE INSPECTION AND MAINTENANCE

SEPTEMBER 2014

INDIAN RAILWAYS INSTITUTE OF CIVIL ENGINEERING,
Pune 411001

Published By
Indian Railways Institute of Civil Engg.
11-A, South Main Road, Koregaon Park, Pune 411 001.

Fourth Edition -

SEPTEMBER 2014

Price ₹ 80/-

Printed by
S.K. Enterprises
Mumbai

Preface to the Fourth Edition

The book **'Bridge Inspection and Maintenance'** had been an useful guide to the Engineers of Indian Railways. The First edition was published in August 1988 and was very popular among the field engineers. The Third revised edition was published in December 2005.

The fourth revised and enlarged edition has now been brought out to fulfill the continuous demand for the book. The content of the book is throughout supplemented with several photographs to illustrate the real life situation so as to improve the understanding of textural material. While revising, latest correction slips and recommendations of bridge standard committee were also considered.

The very first chapter has been revised duly incorporating the latest technique of mobile bridge inspection unit, necessity for submission of detailed documentation on newly constructed bridges etc.

The chapter on detailed inspection of bridges is also supplements with numerous photographs. The portion pertaining to bearing is revised duly including the guidelines for maintenance in this chapter as well as chapter eight on maintenance of steel girder bridges.

In the chapter on NDT of bridges, new NDT test of endoscopy technique and boroscope has also been added. In the chapter six on maintenance of bridges items pertaining to maintenance of composite girders are added.

It is hoped that this book will fulfill the need and assist to field engineers in briefing them about the aspects to be inspected and the corrective action to be taken.

Suggestions for improvement may be sent to me.

September 2014

Vishwesh Chaubey
Director
Indian Railways Institute of
Civil Engineering, Pune.
director@iricen.gov.in

Acknowledgement to Fourth Edition

Inspection and maintenance of Railway Bridges is one of the most sought after book published by IRICEN. It was first published in 1988 and third and revised edition was published during July, 2006. Now the fourth revised and enlarged edition is being brought out.

This book brings about the comprehensive details for various types of Railway bridges for maintenance. Subsequent to second edition, there has been revision in the codes and manuals. An effort has been taken to reflect these updates at appropriate places. The recommendation of various bridge standard committees and recommendation on LWR were also incorporated at appropriate place. Meanwhile, IRICEN could able to collect large number of real life photographs related to various bridge components, activities related to construction & maintenance of bridges. These illustrations were suitably incorporated throughout the book. Several topics such as mobile bridge inspection unit, role of construction engineers in bridge maintenance, painting of steel bridges, inspection and maintenance of bearings, new techniques of NDT, maintenance of composite girders and many more such topics were revised and supplemented with the latest information.

Efforts have been made by IRICEN faculty and staff to bring out this new edition s a more useful guide for the field engineers. In this process the contribution of late Smt. Gayatri Nayak, Shri Harish Trivedi, Shri Pravin Kotkar, Shri V.N. Sohoni and the DTP by Shri Aman Apradh is most notable. I am grateful to Shri N. Lalwani, former Sr. Professor, IRICEN for providing some of the latest information and material to put these contents at proper places. I am also thankful to Shri J.M. Patekari, Lecturer Track, IRICEN for his contribution in revising the chapter on NDT.

I am also thankful to Shri C.S.Sharma, Sr. Professor IRICEN and Shri N.K. Khare, Associate Professor, IRICEN for arranging the DTP work and proof checking. I am also thankful to all the faculty of IRICEN for giving useful suggestions for improving the presentation of this book.

Above all I am grateful to Shri Vishwesh Chaubey, Dirtector IRICEN for his encouragement, regular guidance to bring out present form of the book.

Pune
September 2014

Sharad Kumar Agarwal
Professor/ Bridge
IRICEN

Preface to the Third Edition

The book **'Bridge Inspection and Maintenance'** was first published in 1988. As this book was very popular amongst field engineers, the second revised edition was published in 1996 updating the chapter on repairs to concrete bridges.

The third revised and enlarged edition has now been brought out to fulfil the continuous demand for the book. Since underwater inspection of bridge is one of the key activities to be undertaken for maintenance of bridge substructure and foundation, a new chapter on underwater inspection of bridges has been included. Two more chapters on non destructive testing and nemerical rating system for bridges have also been added to make it more comprehensive.

It is hoped that this booklet will act as a guide for the field engineers who are entrusted with the task of inspection and maintenance of bridges.

Shiv Kumar
Director
IRICEN, Pune.

Acknowledgement

The first edition of this book was published in August, 1988 to serve as a guide to the field engineers who are entrusted with the job of inspection and maintenance of bridges. The second edition was brought out in December, 1995, which has been very popular amongst field engineers. The third edition is being brought out to fulfil this continuous demand. While revising the book, new chapters on underwater inspection of bridges and non-destructive testing have been included to make it more comprehensive. Efforts have been made to improve the readability of the book.

It would not be out of place to acknowledge the support and assistance rendered by IRICEN faculty and staff in the above efforts. I am grateful to Shri Ghansham Bansal, Professor/Bridges for proof-checking of the entire book. I am particularly thankful to Shri Praveen Kumar, Professor/Computers who has provided the necessary logistic assistance for printing of this book.

Above all, the author is grateful to Shri Shiv Kumar, Director for his encouragement and guidance for improving the publication.

A.K. Yadav
Senior Professor/Bridges
IRICEN, Pune

Preface to the Second Edition

The book **'Bridge Inspection and Maintenance'** has been an useful guide to the Engineers of Indian Railways. The first edition was published in August, 1988 and was very popular among the field engineers. This second revised edition has been brought out to fulfil the continuous demand for this book. While revising, the chapter on repairs to concrete bridges has been updated by including the latest techniques on grouting, repairing of spalled concrete, use of polymer based materials etc. This book also includes the current instructions on bridge inspection and maintenance of concrete bridges.

I hope the contents of the revised edition will be implemented by the field engineers during the inspection and maintenance of Railway bridges, so that our tradition of caring for bridges with high order of reliability can be kept up. Any suggestion to improve the book is most welcome.

S. Gopalkrishnan
Director
Indian Railways Institute of
Civil Engineering, Pune.

PREFACE

The subject of **Inspection and Maintenance of Bridges** is of considerable importance to the field officials who are engaged in this aspect of work of the Civil Engineering Department. Requests for outstation courses conducted by IRICEN on this subject are frequent and even repetitive, which is indicative of the need for dissemination of information and experience on this topic. It is hoped that this booklet will fulfil this need and be of assistance to field officials in briefing them about the aspects to be inspected and the corrective action to be taken.

This book has been prepared by Professor K. Ananthanarayanan of this Institute.

If there are suggestions kindly write to the undersigned.

N.K. Parthasarathy
Director
Indian Railways Institute of
Civil Engineering, Pune.

CONTENTS

CHAPTER - 1 BRIDGE INSPECTION - GENERAL

CHAPTER - 2 DETAILED INSPECTION OF BRIDGES

CHAPTER - 6 MAINTENANCE OF BRIDGES

CHAPTER - 7 REPAIRS TO CONCRETE AND MASONRY BRIDGES

CHAPTER - 8 MAINTENANCE OF STEEL BRIDGES

CHAPTER 1

BRIDGE INSPECTION – GENERAL

1.1 Introduction

Bridges are key elements of the Railway network because of their strategic location and the dangerous consequences when they fail or when their capacity is impaired. The fundamental justification for a bridge inspection programme lies in the assurance of safety. Timely and economic planning and programming of remedial and preventive maintenance and repair work, or even bridge replacement with the minimum interruption to traffic are dependent upon detailed bridge inspection. It is particularly necessary in case of old bridges not designed to modern loading standards and also whose materials of construction have deteriorated as a result of weathering.

Inspection is aimed at identifying and quantifying deterioration, which may be caused by applied loads and factors such as deadload, liveload, wind load and physical/chemical influences exerted by the environment. Apart from inspection of bridge damage caused by unpredictable natural phenomena or collision by vehicles or vessels, inspection is also needed to identify or follow up the effect of any built-in imperfections. Inspection can also help to increase life of older bridges. For example, there are certain types of deterioration which appear early in the life of a bridge and which, if not recorded and repaired promptly, can lead to considerable reduction in the length of service life of the bridge.

1.2 Purpose of bridge inspection

Specific purposes of bridge inspection can be identified as detailed below:

1. To know whether the bridge is structurally safe, and to decide the course of action to make it safe.
2. To identify actual and potential sources of trouble at the earliest possible stage.
3. To record systematically and periodically the state of the structure.
4. To impose speed restriction on the bridge if the condition/ situation warrants the same till the repair/ rehabilitation of the bridge is carried out.
5. To determine and report whether major rehabilitation of the bridge is necessary to cope with the natural environment and the traffic passing over the bridge.
6. To provide a feedback of information to designers and construction engineers on those features which give maintenance problems.

1.3 Elements of a bridge

Bridge structure is generally classified under two broad categories:

1. Superstructure
2. Sub-structure

Superstructure consists of all the parts of the bridge that are supported by the bearings on abutments or piers (e.g.- bridge girders, bridge deck, bridge flooring system etc.).

Sub-structure consists of all those parts of the bridge, which transmit loads from the bridge span to the ground (e.g. abutments, piers, bed blocks, foundations, etc.).

1.4 Planning the inspection

Careful planning is essential for a well-organized, complete and efficient inspection. The bridges over water are inspected at times of low water, generally after the monsoon. Bridges requiring high climbing should be inspected during seasons when winds or extreme temperatures are not prevalent. Bridges suspected of having trouble on account of thermal movement should be inspected during temperature extremes. The bridges are inspected starting from foundations and ending with superstructures. Planning for inspection must include the following essential steps:

1. Decide the number of bridges to be inspected on a particular day.
2. Go through the previous inspection reports of those bridges before starting the inspection.
3. Try to have plans and other details of important bridges.
4. Plan any special inspection equipments, staging etc. required in advance.
5. Don't rush through the inspection just for completion sake. Remember that you are inspecting the bridge only once in a year.

1.5 Schedule of inspection

The schedule of inspection for various officials is prescribed in Indian Railways Bridge Manual (IRBM). As per this, all the bridges are to be inspected by PWIs/IOWs once a year before monsoon and by AENs once a year after monsoon, and important bridges by DENs once a year. All the steel structures are inspected by BRIs once in 5 years and selected bridges by Bridge Engineers/Dy.CE (Bridges) as and when found necessary. Side by side, the track on the bridge should also be inspected thoroughly. The bridges that have been referred by AEN/DEN/ Sr.DEN for inspection by a higher authority, should be inspected by the higher authority in good time. Bridges which are of early steel, and bridges which are overstressed should be inspected more frequently as laid down vide para 509 of IRBM.

Proforma for Bridge Inspection Register is shown at Annexure - A1 to A4

1.6 Preliminary study

While going for bridge inspection one should be familiar with the historical data of the bridges i.e.

1. Completion plans, where available
2. Pile and well foundation details
3. Earlier inspection reports
4. Reports regarding the repairs/strengthening carried out in the past.
5. For major girder bridges, stress sheets are useful.

1.7 Inspection equipments

The following equipments are required for thorough inspection of the various elements of bridges (Fig. 1.1 (a), 1.1 (b) and 1.1 (c)) :

1. Pocket tape (3 or 5 m long)
2. Chipping hammer
3. Plumb bob
4. Straight edge (at least 2 m long)
5. 30 metre steel tape
6. A set of feeler gauges (0.1 to 5 mm)
7. Log line with 20 kg lead ball (to be kept at bridge site)
8. Thermometer
9. Elcometer
10. Wire brush
11. Mirror (10x15 cm)
12. Magnifying glass (100 mm dia.)
13. Crackmeter
14. Chalk, Waterproof pencil, pen or paint for marking on concrete or steel

15. Centre punch
16. Calipers (inside and outside)
17. Torch light (5 cell)
18. Screw drivers
19. Paint and paint brush for repainting areas damaged during inspection
20. Gauge-cum-level
21. Piano wire or levelling instrument for camber measurment
22. 15 cm steel scale
23. Inspection hammer (350-450 gm)
24. Rivet testing hammer (110 gm)
25. Schmidt hammer
26. Concrete cover meter
27. Binoculars (Optional where required)
28. Camera (Optional where required)

Depending on the bridge site and the need envisaged during inspection, some additional equipments that may become necessary are listed below:

1. Ladders
2. Scaffolding
3. Boats or barges
4. Echo sounders (Fig. 1.2) to assess the depth of water/ scour depth
5. Levelling equipment (to assess camber)
6. Hand held laser distance/range meter. (Fig. 1.3)
7. Dye penetration test equipment (to detect cracks specially in welds)

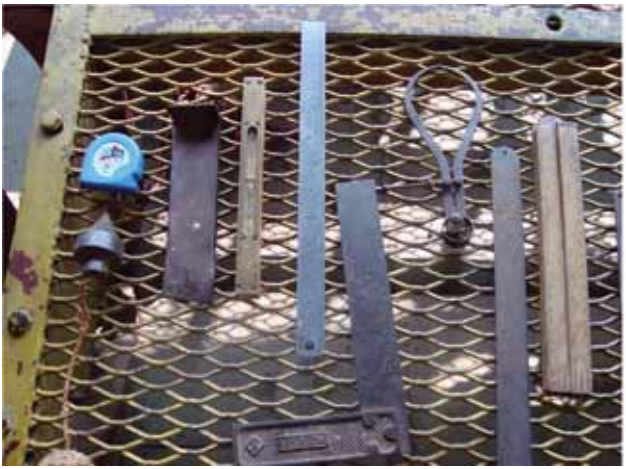

Fig. 1.1 (a) Inspection equipments

Fig. 1.1 (b) Inspection equipments

Fig. 1.1 (c) Inspection equipments

Fig. 1.2 Echo Sounder

Fig. 1.3 Hand held laser distance/range meter.

1.8 Arrangement for Inspection of Bridge Superstructure

Inspection of Bridge can be effective only if the inspection official is well equipped with support system that will lead him to various components of the bridge. The first requirement is to reach to the bridge site either by rail or by road; depending upon this the inspecting official has to plan for necessary arrangement for detailed inspection of bridge. Once the inspecting official reaches the bridge site primarily he has two options – (i) either to reach the super structure from the ground below or (ii) he can directly reach to the super structure from top. Accordingly he has to plan for inspection of various components of super structure.

Common facilities for bridge inspection includes the chequered plate on the steel girder bridge (Fig.1.4) or path way on side of girder (Fig.1.5) for the keyman, scaffolding arrangement/ladders (Fig.1.6 & Fig.1.7) to reach top of through steel girder bridge, ladders to reach the bearing.

Many times permanent ladder arrangement is made to reach top of through girder bridges. Some Railways have attempted hanging cradle for PSC girder bridges (Fig.1.8). Besides these arrangements for inspection of bearing from all round of the pier and inspection of bottom chord/soffit of the bridge is also necessary.

However, these are make-shift arrangement predominantly temporary in nature and can be utilised as a when required. The biggest drawback of these arrangements is doubt about the safety

and reliability of these non engineered structures as well as time required for erection of these arrangements. Moreover, transportation of the material to the site is also an important factor to be considered before planning for such arrangement.

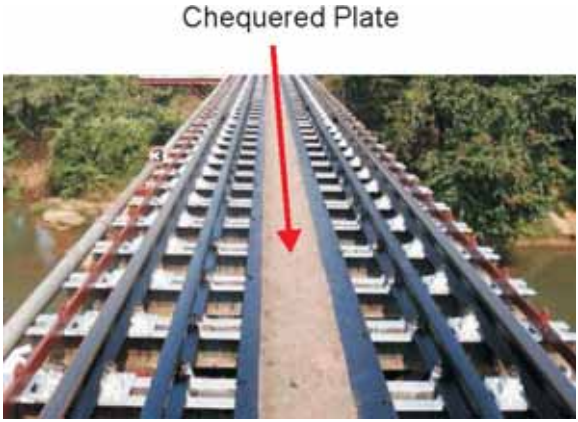

Fig 1.4: Chequered plate arrangement for keyman walkway

Fig 1.5: Pathway for inspection from side of the bridge

Fig 1.6: Ladder is added to end frame to reach up of through only

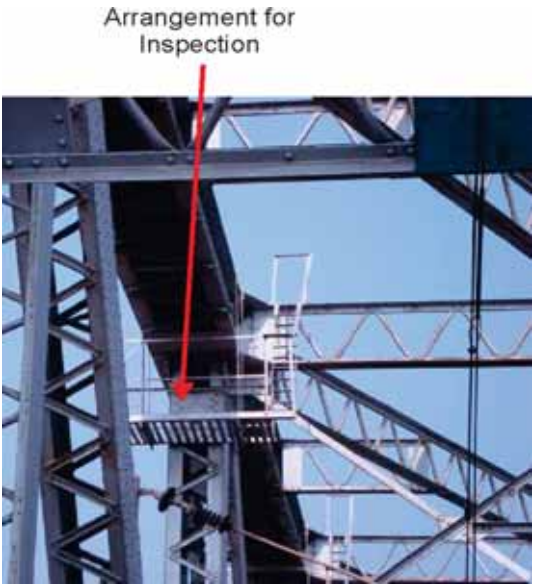

Fig 1.7: Arrangement for inspection on top chord

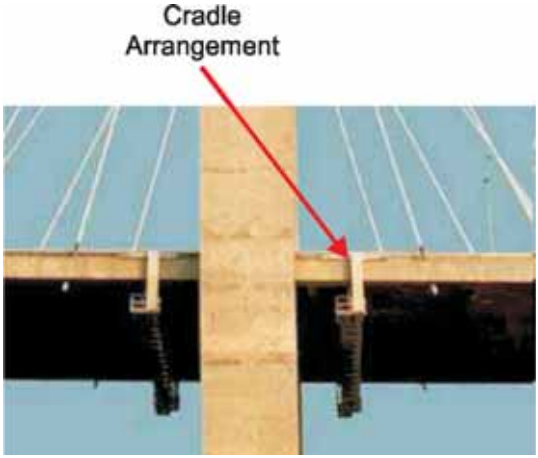

Fig 1.8: Cradle arrangement for bridge inspection

Over the last few years, need arises to include several non destructive testing techniques for bridge inspection. Many times these techniques require heavy equipment and generator. In western countries Mobile Bridge Inspection Units (MBIUs) are being used for inspection of bridges. MBIU facilitate inspection of superstructure from both top and bottom side.

1.8.1 MOBILE BRIDGE INSPECTION UNIT

Mobile bridge inspection unit (MBIU) is a self propelled vehicle for inspection of bridge members which are not accessible to the workmen with the present system i.e.by using planks/ropes as platform etc. In the year 2009, the CRS Sanction was given and the vehicle was declared fit to run at the speed of 50. The first MBIU has been introduced by Northern Railways in 2010 to facilitate inspection of bridges. In routine 10-12 workmen are required for technical inspection of a bridge. By deploying this unit merely 6 workmen can carry out the same quantum of technical inspection in a particular time. This unit cannot be used to inspect the outer structural members of Open Web Girder. The unit cannot work in OHE area due to its wider arm and mass. However, it is a proto type unit and the limitations can be overcame by future design

The MBIU works on the pattern of Track Machines. Scope of MIBU is as under:

1. Open deck steel plate girder bridges.
2. Ballasted deck bridges (RCC, PSC and Composite).
3. Arch bridges.
4. Via ducts.
5. Through open decks (truss type) steel girder bridges.
6. Piers and abutments of bridges

The MBIU consists of 2 units:

Power Pack vehicle & Inspection vehicle - The Power Pack is self propelled vehicle (Fig.1.9) having front and rear driving cabins with 2 numbers Cummins NTA 855R diesel engines of 340 HP suitable for max driving speed of 70 kmph. It carries built in generator set which facilitate welding and riveting at site. The Power Pack vehicle is supplied by M/S SAN Engineers and Locomotives Bangalore assembled at RCF/KXH.

Fig 1.9: Power pack and inspection vehicle with lowered arm of MBIU

Inspection vehicle has space to accumulate 16 people including one supervisor's cabin. It has a well equipped kitchen having cooking arrangement of meal for 20 persons. It has also been provided with a creep unit capable to operate at the time inching at a speed of

0 to 1.4 kmph for carrying out the inspection and maintenance work. Power equipment of inching operation is provided on the inspection vehicle. This vehicle can run in both the directions at same speed. The inspection vehicle is manufactured and supplied by MOOG GMBH, German assembled at RCF/KXH. The inspection vehicle is equipped with:

1. Bucket type unit - The range of inspection arm in horizontal plane is 8.00 m. on either side from centerline of track; and in vertical plane is 7 m and 12 m above and below rail level respectively (Fig.1.10).
2. Main platform type unit
3. Hoist type platform unit capable of descending 100 m below the rail level of access for inspection along bridge piers / abutments

Fig 1.10: Bucket of MBIU is lowered under bridge

1.8.2 Suitability of inspection arrangements

Suitability of inspection arrangement shall be decided after taking holistic view for each section based on various factors such as initial cost, labour requirement, ease of use, maintenance of arrangements public nuisance/security, feasibility, time taken for inspection/traffic block and confidence of inspecting officials. The broad recommendations for providing inspection arrangements can be as follows.

a. Temporary arrangement is sufficient for bridge with low to moderate height.

b. Bridges with abnormal height or inaccessible river bed may have permanent arrangements.

c. Sections where line block is a problem or numbers of bridges are large may have road inspection vehicle or permanent arrangements depending upon the economics.

d. If traffic blocks are easy but river bed is not accessible, rail mount inspection vehicle may be used.

e. If Railway traffic is high and river bed is in accessible, permanent arrangements may be provided

f. If bridge is provided with side pathway etc. For local public, the same may be suitably modified to facilitate bridge inspection.

1.9 Safety precautions

While inspecting bridges, one should adopt certain safety measures which are listed below:

1. Wear suitable dress so that loose ends do not get caught; too-tight-a-dress may hamper your free movements.
2. If you normally wear glasses for improving your eye sight, wear them when climbing up or down the sub- structures or superstructures.
3. Keep clothing and shoes free of grease.
4. Scaffolding or platforms should be free from grease or other slippery substances.
5. Scaffolding and working platforms should be of adequate strength and must be secured against slipping or over turning.
6. Line block or power block shall be taken as and when necessary.
7. No short cuts, at any cost, should be adopted.

Note : for more details please refer BS-113

1.10 Role of construction agency in maintenance aspects

Open line maintenance unit of railway often felt handicapped due to non availability of completion plan and detailed drawings. Non availability of foundation plan and detailing poses serious challenges related to safe load carrying capacity as and when loading standard is revised or upgraded. Similarly non availability of detailed hydrological calculation of waterway makes it difficult to take decision on the number of span vis a vis over all water way in case a new bridge is constructed parallel to existing one. Non availability of structural detailing and plan of old bridges make it practically impossible to take decision on load carrying capacity and residual life of bridge however with the use of several non destructive testing in conjunction with detailed finite element modeling and analysis, some idea on the above can be obtained.

As far as new construction is concerned it is desirable that the construction agency shall prepare detailed documentation related to various aspects involved in planning, analysis, design and maintenance of bridge. These documents shall be preserved both in print and digital format, baring few exceptional cases of bridge building particularly across Major River, none of the bridge had been built without encountering any unanticipated major problem. There may be cases where the problems are relatively simple in magnitude but having serious repurcations. These documents shall also incorporate the challenges faced and remedial actions taken to overcome the challenges. Apart from these, there may be certain assumptions and special features which would be difficult to visualize at later stage without the aid of either suitable documentation or by narration from the executing personals. Similarly at the time of construction, the engineers associated with the project might have anticipated problems which would reflect in future. It would also be possible that the construction engineers might have also thought of suitable remedial measures to be taken in case of such eventualities.

It is therefore necessary that the documentation consists of detailed planning, assumptions, analysis, design, unanticipated problems and their solutions, other challenges and remedial actions, special features, anticipated future problems and possible remedial measures, maintenance activities and schedule of maintenance , action requires to preserve the integrity of the bridge on long term basis etc.

♦ ♦ ♦

CHAPTER 2

DETAILED INSPECTION OF BRIDGES

Detailed inspection of a bridge is required to be done starting from foundation right up to superstructure, including the track. Approaches of bridges should also be inspected for scour, settlement etc.

2.1 Foundations

Visual inspection of foundations is difficult in majority of cases and the behavior of foundations has to be judged based on observation of exposed elements of bridge structures. Foundation movements may often be detected by first looking for deviations from the proper geometry of the bridge.

1. Any abrupt change or kink in the alignment of bridge may indicate a lateral movement of pier (Fig. 2.1).
2. Inadequate or abnormal clearance between the ballast wall and end girders are indications of probable movement such as leaning, bulging etc. of abutments.

Types of defects in foundation which one should look for during inspection are discussed below:

2.1.1 Disintegration of foundation material

In many bridges where open foundations are provided, some

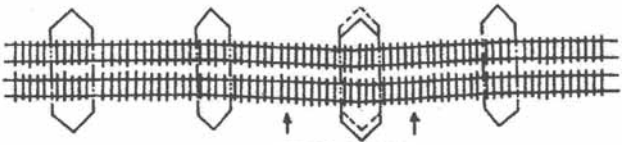

RIVER FLOW
PLAN

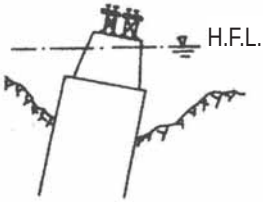

ELEVATION

Fig. 2.1 Effect of scour on deep foundation, misalignment at pier

portion of foundations under piers might be visible during dry season. Such portions can be easily probed to ascertain whether the construction material is showing signs of deterioration or distress. The deterioration can be on account of weathering of the material, leaching of mortar etc. If the foundation so examined indicates signs of deterioration, it becomes necessary to probe other pier foundations by excavating around those foundations. Excavation around the foundations, piers and abutments should be done carefully, tackling small portion of foundation at a time, especially in an arch bridge, as excavation results in removal of over burden in the vicinity of foundation and consequent loss of bearing capacity and longitudinal resistance. Further such excavation should be avoided as far as possible if the water table is high, the ideal time being when the water table is at the lowest.

In case of deep foundation in rivers/creeks having perennial presence of water, one can easily examine a portionof foundation (piers/wells) exposed in dry-weather condition and assess any deterioration that is visible. In such cases, if deterioration is noticed, it is advisable to carry out inspection of underwater portions by employing divers and using diving equipment and underwater cameras. Specialist agencies may be employed, if necessary, for this purpose.

2.1.2 Heavy localized scour in the vicinity of piers/abutments

A serious problem, which is frequently encountered around piers and abutments is scour. This is the erosive action of running water in loosening and carrying away material from the bed and banks of the river.

Three types of scour affect bridges as described below:

i. Local scour

Local scour is removal of sediment from around bridge piers or abutments. Water flowing past a pier or abutment may scoop out holes in the sediment; these scour holes formed during high floods are likely to be filled up when flood recedes. (Fig. 2.2)

Fig. 2.2 Local scour in the vicinity of piers

Local scour is most likely around the following:

1. Nose of pier
2. Head of the guide-bund
3. Down-stream side of skew bridge
4. Down-stream side of drop walls
5. Where hard strata is surrounded by comparatively softer erodable material
6. Outside of curve in a bend in the course of the river/ stream, etc.

ii. Contraction scour

Contraction scour is removal of sediment from the bottom and sides of the river. Contraction scour is caused by an increase in speed of the water as it moves through a bridge opening that is narrower than the natural river channel.

iii. Degradational scour

Degradational scour is general removal of sediment from the river bottom by the flow of the river. The sediment removal and resultant lowering of the river bottom is a natural process, but may remove large amounts of sediment over a period of time.

During floods, the scour is maximum but as the water level subsides, the scoured portion of river bed gets silted up partly or fully. Inspection during dry season might therefore, at best, only indicate possible locations where excessive scour occurred in a river bed, but it would not be possible to assess the magnitude of such scour. Once such locations are identified, measurement of scour should be carried out in rainy season during medium floods. Such measurements can be analyzed to ascertain the grip length of deep foundations available during flood conditions.

The most commonly used and least expensive method of inspection of scour is taking of soundings with a log line. The sophisticated method of measuring this scour as well as bed levels in other parts of the bridge is by using an echo sounder (Fig. 1.2).

Open foundations are taken to a shallow depth and if not protected appropriately from scour, it may lead to removal of material from underneath the foundation (Fig. 2.3). This may show itself as cracks on the portion of the abutment or pier above water.

Fig. 2.3 Effect of scour on a shallow foundation

Undermining of deep foundations leads to tilting or sinking of a pier. The best indication of such an occurrence is a slight misalignment or change in the cross level of the track over the bridge. If the longitudinal level of track gets disturbed, it could be on account of sinking of a pier (Fig.2.4). It is necessary to record such defects immediately in the bridge register. This facilitates proper analysis and execution of suitable corrective measures to prevent complete failure at a later date.

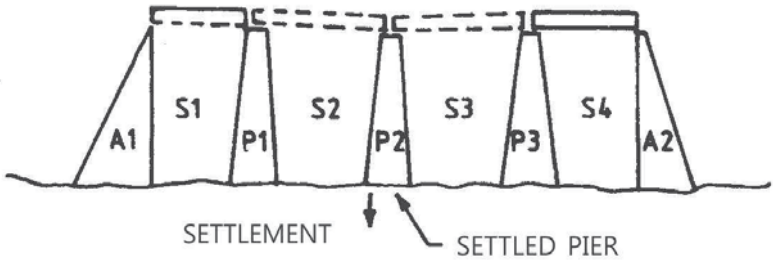

Fig. 2.4 Sinking of pier-

2.1.3 Uneven settlement

Uneven settlement of foundations can occur on account of difference in the loading pattern in different parts of the pier or abutment, and also because of different soil strata below the foundation.

Fig. 2.5 Cracks in masonary piers

Many times due to uneven settlement cracks can be seen in the pier (Fig. 2.5) Varying patterns of scour in different parts of the foundation may also cause uneven settlement.Settlement may occur on account of

1. Increased loads
2. Scour
3. Consolidation of the underlying material
4. Failure/yielding of the underlying soil layer.

Differential setllement can be noticed from observation of crack patterns on piers/abutments/wing walls (Fig. 2.6). In many cases, the differential settlement may lead to tilting of abutments or piers (Fig. 2.1).

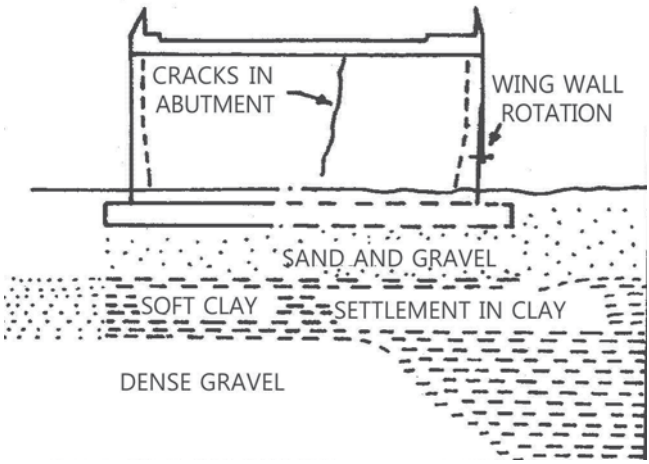

Fig. 2.6 Differential settlement under an abutment

It is difficult to measure the tilt, mainly because of the front batter generally provided on these structures. Therefore, to keep these structures under observation, it is necessary to drive a row of tie bars horizontally at the top of the abutment and another row horizontally near the bottom of the abutment. A plumb line is dropped

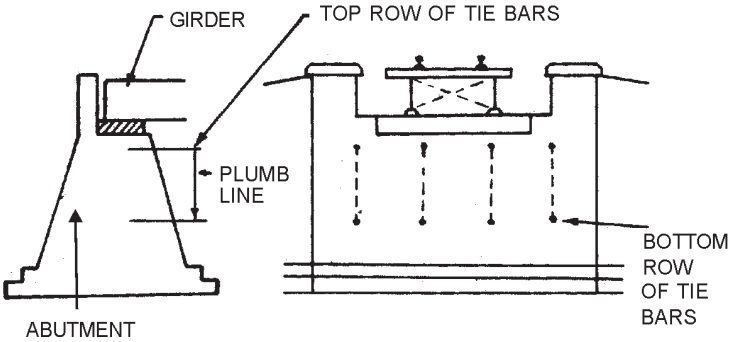

Fig. 2.7 Measurement of tilt

from the edge of a top tie bar and a mark is made on the corresponding bottom tie bar. Observations are taken from time to time and the new markings are compared with previous ones to assess any tendency of tilting of the structure (Fig. 2.7).

As an alternative, a record of clear span may be kept in the bridge inspection register which would give an indication of any lean (in case of existing bridges).

2.2 Abutments and piers

Various aspects to be noted during the inspection of abutments and piers are described below.

2.2.1 Crushing and cracking of masonry

This generally occurs in portions of bridge structure, which carry excessive dynamic impact. Another reason for this defect is reduction in the strength of materials of construction with ageing. This type of defect is generally noticed around the bed blocks.

2.2.2 Weathering

This type of damage occurs on account of exposure of the materials of construction in the bridge to severe environmental conditions, over long periods of time. Areas of the bridge structure which undergo alternate drying and wetting are prone to exhibit weathering damage. This defect can be easily identified by tapping the masonry with a chipping hammer (Fig. 2.8). Surface deterioration will be indicated by layers of material spalling off. Hollow sound

indicates deterioration of masonry stones/bricks/ concrete as the case may be.

Fig. 2.8 Weathering of masonary block

2.2.3 Failure of mortar

Lime mortar and cement mortar with free lime content are subject to leaching because of action of rain and running water. As a result, their binding power gradually reduces. This defect is many times covered up by pointing of masonry from time to time. Such pointing will give the inspecting officials a false sense of security and consequent complacency, whereas leaching may progress unabated. This defect can be identified by removing the mortar from a few places by raking out the joints with the help of a small sharp knife. If the material which comes out is powdery with complete separation of sand and lime particles, it is sure sign of loss of mortar strength. The leaching of mortar also leads to loose or missing stones/bricks.

2.2.4 Bulging

Bulging occurs in abutments, wing walls and parapet walls essentially on account of excessive back pressure. The basic reasons for such excessive back pressure are:

- Excessive surcharge with increased axle loads
- Raising of abutment and wingwalls over the years due to regrading of track
- Choked up weep holes
- Improper backfill material
- Failure of backfill material because of clogging.

2.2.5 Transverse cracks in piers

Such cracks are rarely observed. These cracks can arise because of increased longitudinal forces coming over the pier and thereby creating tensile stresses in portions of the pier, correspondingly redistributing a higher compressive force in compression zone. The increase in longitudinal forces may also be caused by freezing of bearings as a result of improper maintenance. If such cracks are noticed on tall masonry (brick/ stone) piers in bridges in the vicinity of stopping places (such as signals) or in heavily graded areas, the condition of bearings must be examined. Detailed investigation must be carried out to ascertain reasons for such cracks and remedial measures undertaken on priority.

These types of cracks are many times observed on mass concrete or RCC piers of recent origin. The reason for such cracks can be traced to long gaps between two successive concrete lifts usually on account of intervention of rainy season. When the construction work is recommended in such situations, precautions are required to be taken to clean the old concrete surface of all loose matter, rub it with wire brush, clean it by water jet, and then commence a new lift. A good practice would be to provide dowel bars at the interface.

2.3 Protection works

Protection works are appurtenances provided to protect the bridge and its approaches from damage during high flood conditions. Meandering rivers, during high floods, may out flank and damage bridge and approaches. To control the same, following protective works are provided, singly or in combination.

1. Flooring
2. Curtain and drop walls
3. Pitching
4. Toe walls
5. Guide bunds
6. Marginal bunds
7. Spurs/ groynes

8. Aprons
9. Closure bunds
10. Assisted cut offs
11. Approach banks
12. Sausage/rectangular crates (Fig. 2.8).

Maintaining these works in proper condition is as important as maintenance of the bridge structure itself.

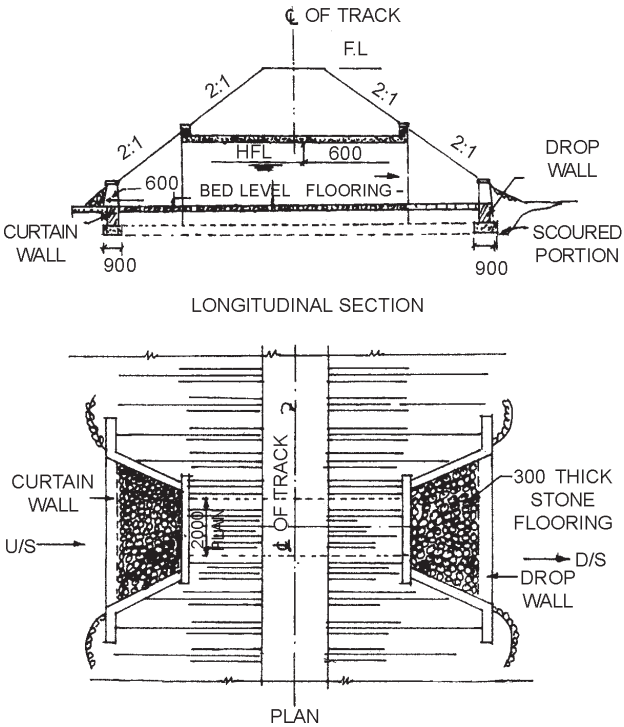

Fig. 2.9 Curtain wall, drop wall and flooring

2.3.1 Flooring

Flooring is provided in bridges with shallow foundations so as to prevent scour. At either end of the flooring on upstream and downstream side, curtain walls and drop walls are provided to prevent disturbance to the flooring itself. There have been instances where neglect of flooring has led to failure of bridges. Since such flooring is generally provided in smaller bridges, it is more likely to be neglected. There are cases in which the flooring has completely vanished through the ravages of flood/ time. In such cases, the inspecting official should take care not to write the remark “NIL” under the column “flooring” provided in the Bridge Register without cross checking the original drawings.

Generally heavy scour is observed on the downstream side of drop wall (Fig. 2.9). It is necessary to repair this scour by dumping wire crates filled with boulders (Fig. 2.10). Dumping of loose boulders is seen to be quite ineffective in majority of such cases wherever water impinges at such locations at high velocity and the loose boulders are carried away to downstream locations.

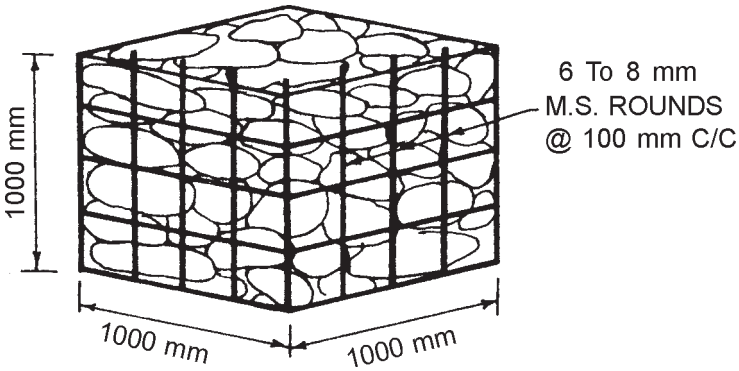

Fig. 2.10 Wire crates

2.3.2 Pitching

Stone pitching is some times provided on approach banks constructed in the khadir of alluvial rivers to prevent erosion of the bank. Pitching is also provided on guide bunds and spurs for the same purpose. Pitching acts like an armour on the earthen bank. It is necessary to inspect this pitching and rectify the defects as any neglect of this may lead to failure of approach banks/guide bunds, etc. during high floods.

Toe wall is an important component of pitching and if the toe wall gets damaged, pitching is likely to slip into the water. Providing a proper foundation to the toe wall is important (Fig. 2.11).

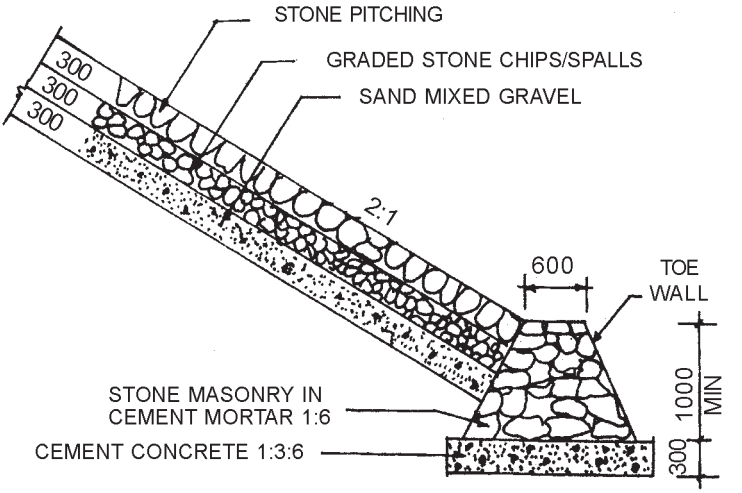

Fig. 2.11 Toe wall and pitching

In a number of small and major bridges (because of improper excavation of borrow pits while constructing the line) a stream starts flowing parallel to the bank on bridge approaches. To protect the bank from scouring, a toe wall is provided at the bottom of bank pitching. This toe wall needs to be inspected properly and kept in good condition.

2.3.3 Guide bunds

These appurtenances are provided generally in alluvial rivers to train the river stream through the bridge (Fig. 2.12). On many of the bigger and longer guide bunds, a siding is laid to work ballast trains for transporting boulders. The track of the siding must be maintained in proper condition.

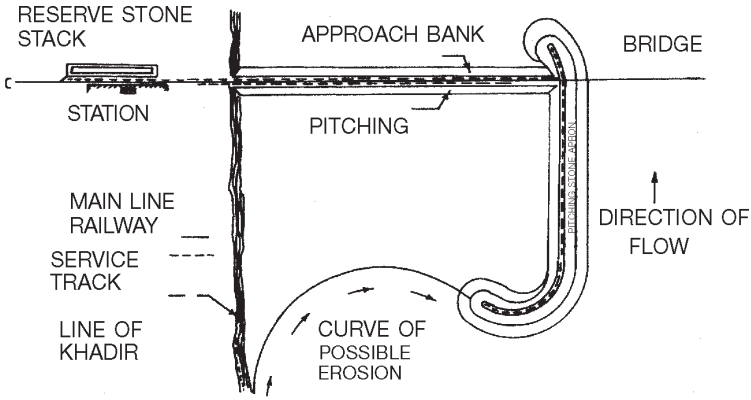

Fig. 2.12 Guide bund and apron

Disturbance to the pitching stone in the slope of guide bund indicates possibility of further damage during subsequent monsoon and should be carefully noted.

It is necessary to take longitudinal levels and also levels for plotting cross section to ascertain whether there had been any sinking of these works. Sinking of guide bunds is dangerous and may lead to overtopping of floods and consequent failure during floods.

Guide bunds constructed on clayey soils need special attention as regards scouring at the base. Scouring may cause a vertical cut below the toe of guide bund which may ultimately result in failure of guide bund by slipping. Therefore, whenever water keeps on standing at the toe of the guide bund, it is necessary to take soundings and plot the profile of the guide bund. This is particularly possible at mole heads.

2.3.4 Aprons

Apron is provided beyond the toe of slope of guide bund so that when the bed scour occurs, the scoured face will be protected by launching of apron stone. As the river attacks the edge of the guide bund and carries away the sand below it , the apron stone drops down and forms a protective covering to the under water slope. This is known as launching of apron (Fig. 2.13).

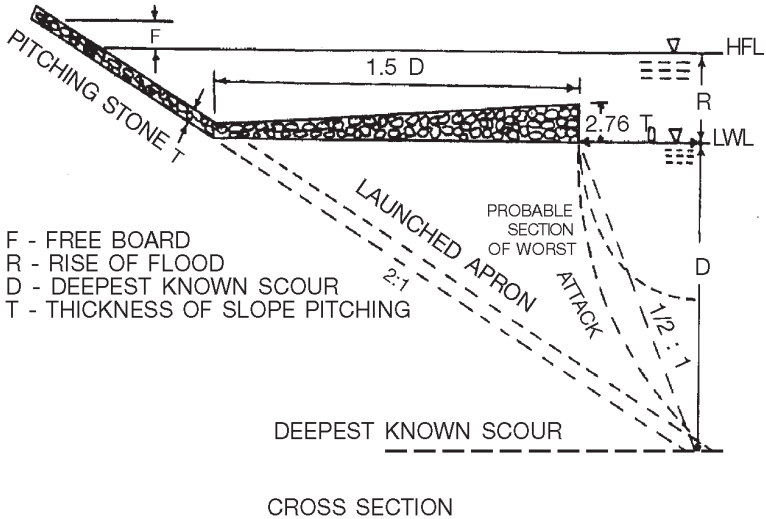

Fig. 2.13 Launching of apron

2.4 Arch bridges

Most of the arch bridges are of old vintage but they usually have such a reserve of strength that they have been able to carry the present-day traffic with increased axle loads and longitudinal forces, without much signs of distress. For effectiveness and meaningful inspection of arch bridges, it is essential that the inspecting official is conversent with the nomenclature of variouscomponents of an arch bridge. The various parts of the arch bridge are shown in Fig.2.14.

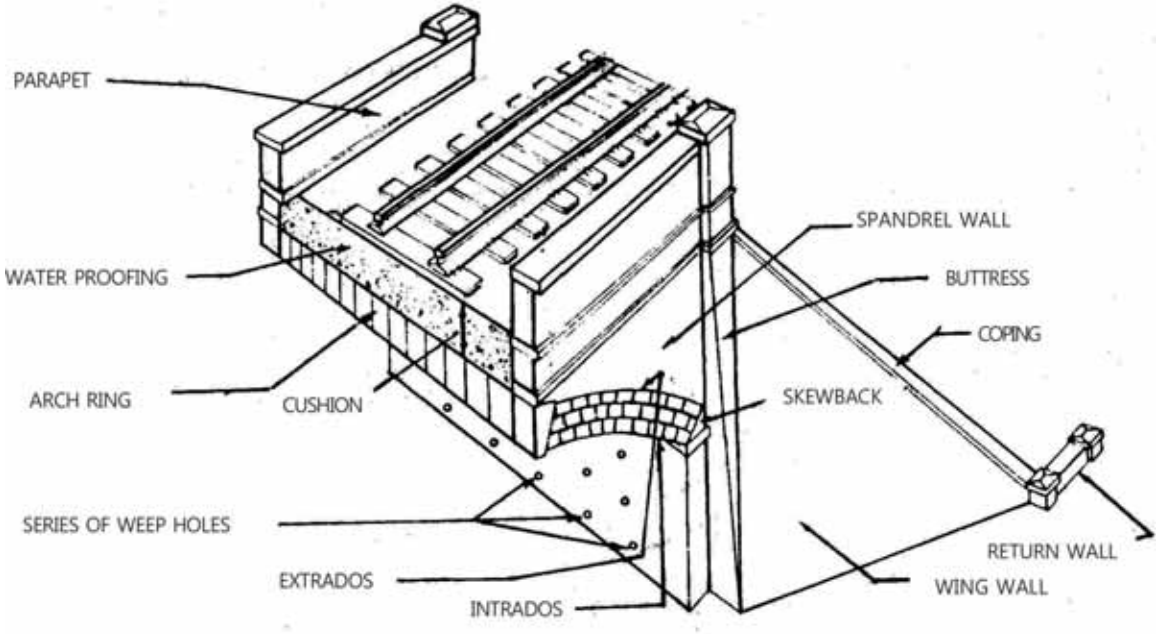

Fig. 2.14 Components of arch bridge

For proper inspection of any structure, it is necessary that the inspecting official understands the load transfer mechanism in that structure. If one looks at the load transfer mechanism of an arch structure, it can be observed that the loads coming on the arch are transferred as a vertical reaction and horizontal thrust on the substructure (pier/abutment). This is depicted in Fig. 2.15. From this, one can easily conclude that soundness of foundation is extremely important in arch bridges. This fact must be borne in mind not only during inspection but also in executing works such as jacketing of piers and abutments of arch bridges.

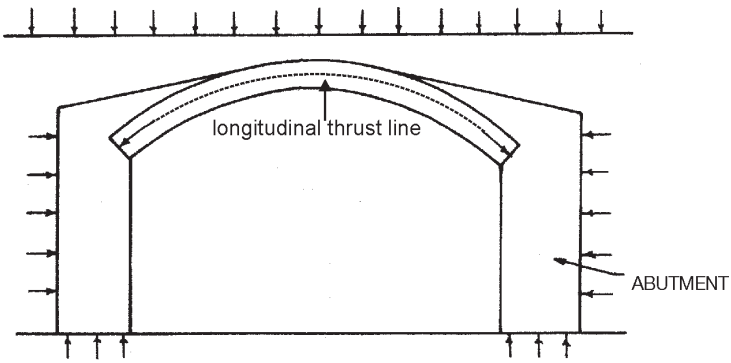

Fig. 2.15 Mechanism of load transfer in arch bridge

Following defects are generally associated with arch bridges.

2.4.1 Cracks in abutments and piers

These types of cracks indicate uneven settlement of foundations. These are of serious nature. The reasons of unequal settlement should be identified and necessary remedial measures should be taken. As arch is resting on substructure, in the worst conditions, such cracks may extend through the arch barrel also and may appear as longitudinal cracks (cracks parallel to the direction of traffic) in the arch barrel (Fig. 2.16). These cracks should be grouted with cement / epoxy mortar and tell tale provided to observe further propogation, if any.

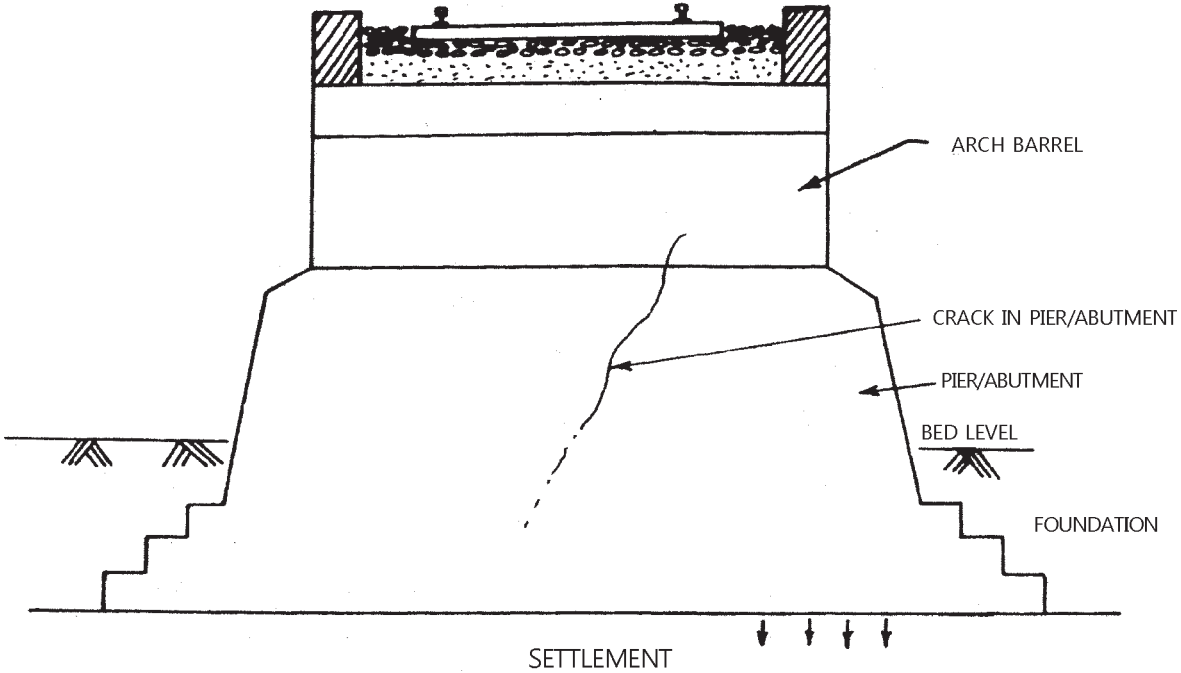

Fig. 2.16 Crack in pier/abutment extending to arch barrel

2.4.2 Cracks associated with spandrel wall

In case of brick masonry bridges, where spandrel walls are constructed monolithically with the arch barrel, longitudinal cracks sometimes appear under the inside edge of spandrel wall on the intrados. If such cracks are very fine and do not widen with time then they are mostly attributable to the difference in stiffness between the spandrel wall, which acts like a deep beam, and the flexible arch barrel (which results in incompatibility of deflections at their junction). Such cracks are not considered serious, but they must be kept under observation. Fig. 2.17 shows this type of crack.

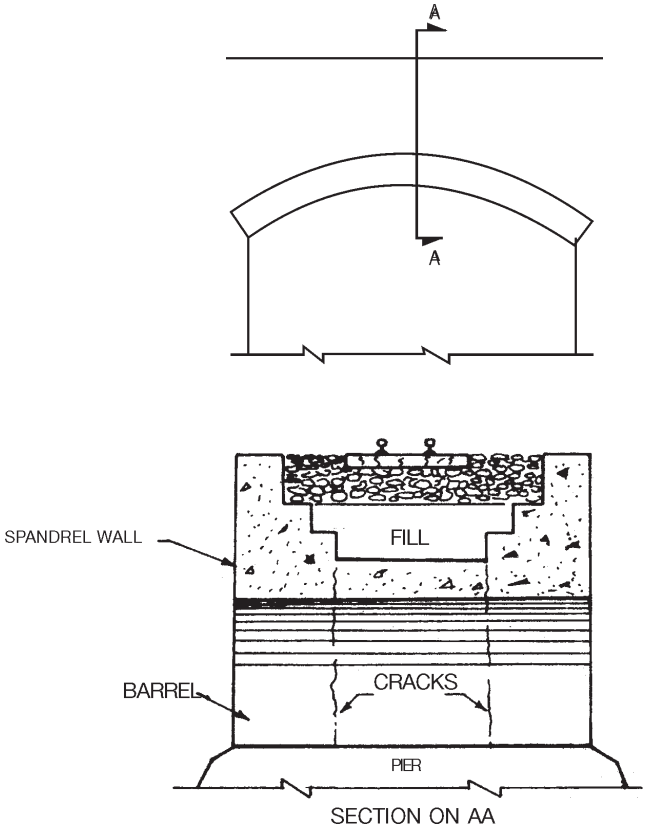

Fig. 2.17 Longitudinal cracks under spandrel wall

However, if such cracks show tendency to widen with time, then the problem can be traced to excessive back pressure on the spandrel wall arising out of ineffective drainage or excessive surcharge load from the track. Many times, track level on the arch is raised bit by bit and new masonry courses are added on the spandrel wall without giving thought to the adequacy of spandrel wall cross section. This is also a cause for such cracks.

Excessive back pressure on spandrel walls can also lead to bulging and/or tilting of the spandrel walls. (Fig. 2.18) The remedial action in case of excessive back pressure on spandrel walls lies in improving the drainage by clearing the weep holes in the spandrel wall and providing suitable back fill material over a strip of about 450 mm immediately behind the spandrel wall. The drainage of the arch should never be sought to be improved by drilling holes through the arch barrel as it may lead to shaking of the barrel masonry and weakening of the arch bridge. The drainage of the fill may be improved by cleaning weep holes/ providing new weep holes or by provision of granular material in the back fill.

Fig. 2.18 Bulging and/or tilting of the spandrel walls

Blockage of drainage and excessive surcharge may also, sometimes, lead to sliding forward of the spandrel wall, particularly in case of bridges where spandrel wall and the arch barrel are not monolithically connected. Fig. 2.19 shows this condition. Many times the combined action of above explained several defects may lead to complete collopse of the facewall of the arch (fig 2.20)

Fig. 2.19 (a)

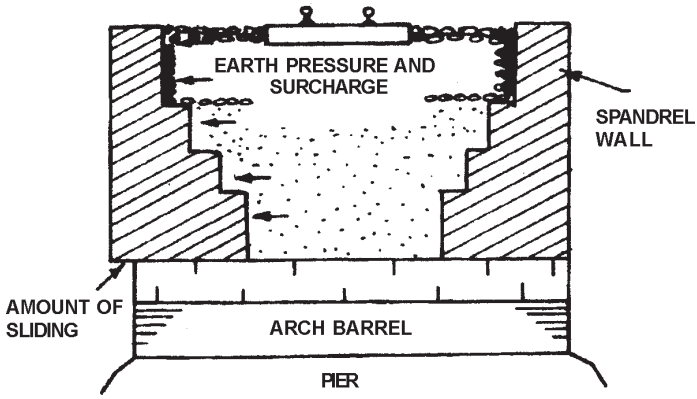

Fig. 2.19 (b) Sliding forward of spandrel wall

Sometimes, longitudinal cracks are noticed in the arch, away from spandrel wall. These cracks may occur due to differential deflections of the part of arch barrel subjected to live load and the remaining part. Such cracks may be seen between the adjacent tracks or between the track and spandrel wall. They may also be due to differential settlement of foundation. The underlying cause should be identified and appropriate remedial action taken.

Fig. 2.20 Collapse of face wall

2.4.3 Cracks on the face of the arch bridge

Sometimes crack is noticed at the junction of the spandrel wall and extrados of the arch in the vicinity of the crown of the arch (Fig. 2.21(a)). One reason is excessive back pressure on the spandrel wall. It can also be on account of excessive rib shortening or distortion of arch barrel under excessive loads. The cause can be ascertained by observing such cracks under traffic. If the cracks breathe under traffic, they are on account of rib shortening and distortion of arch barrel. These cracks are serious in nature and they indicate inherent weakness in the arch.

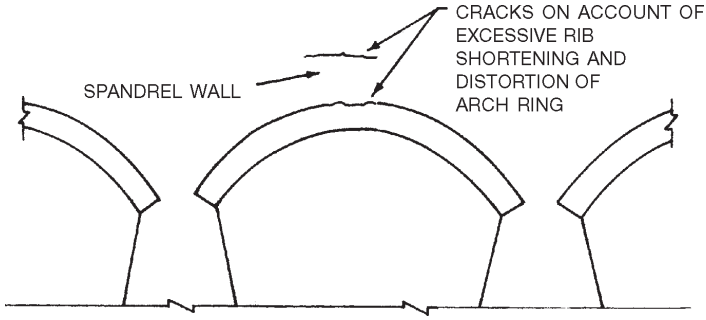

Fig. 2.21 (a) Cracks in spandrel wall due to weakness in arch ring

Cracks in spandrel wall originating above the piers may be caused by sinking of pier (Fig. 2.21(b)). This is obviously a serious crack and needs immediate strengthening of foundation.

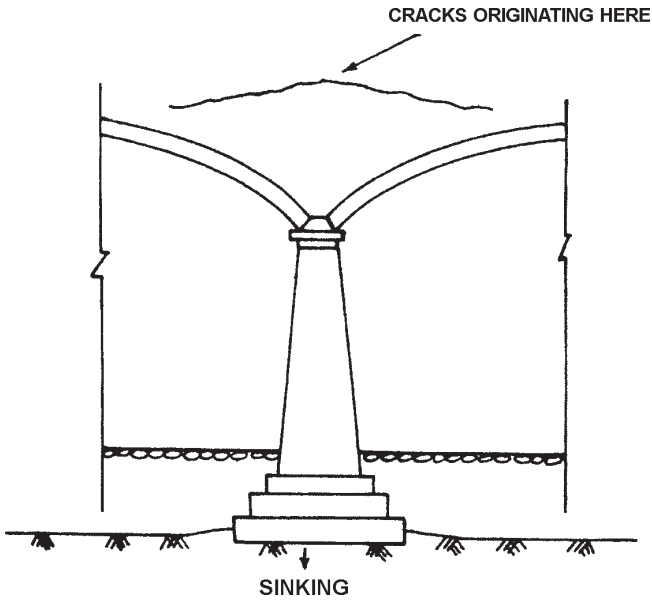

Fig. 2.21 (b) Cracks in spandrel wall due to sinking of pier

2.4.4 Cracking and crushing of masonry

This type of distress is sometimes noticed in the vicinity of crown of the arch and can be traced to:

1. Weathering of stones/bricks
2. Excessive loading
3. Inadequate cushion over the crown.

As per IRS Arch Bridge Code, a minimum cushion of 1000 mm is recommended over the crown of the arch. Cushion is the vertical distance between the bottom of the sleeper and the top of the arch. Lesser cushion results in transfer of heavier impact on the crown which may result in cracking and crushing of the masonry in the vicinity of the crown. Existing cushion may be reduced while changing the metal or wooden sleepers over the bridge with concrete sleepers.

2.4.5 Leaching out of lime/cement mortar in the barrel

This condition is many times noticed in the arch barrel and can be traced to poor drainage. Water trapped in the fill above the arch seeps through the joints. In such cases, the remedy lies in grouting the joints and improving the drainage through the weep holes in the spandrel wall.

2.4.6 Loosening of key stone and voussoirs of arch

This can happen on account of tilting of the abutment or pier because of excessive horizontal thrust. This is also likely to occur where higher dynamic forces are transmitted on account of lesser cushion.

2.4.7 Transverse cracks in the arch intrados

These cracks are shown in Fig. 2.22. By their very nature, these are serious. They indicate presence of tensile stresses at the intrados of the arch and are generally noticed in the vicinity of the crown of the arch in the initial stages. These cracks have a tendency to progress in diagonal/zigzag directions in stone masonry arches. This is because cracks always progress along the weakest planes in the structure, and in case of stone masonry the weakest plane is

along the mortar joint. These cracks indicate serious weakness in the arch and need proper investigation and adoption of appropriate strengthening measures.

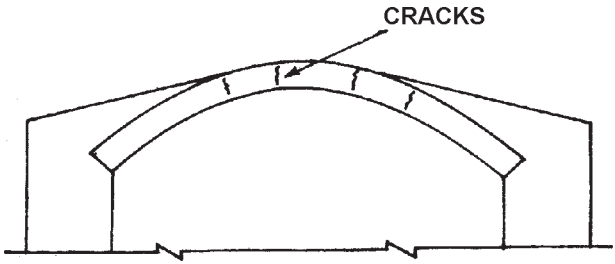

ELEVATION OF ARCH

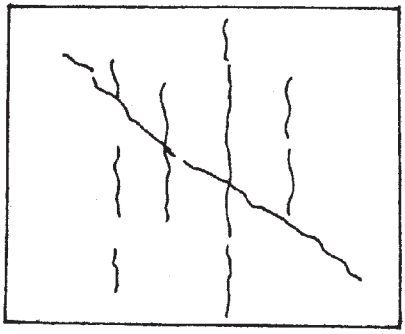

PLAN OF ARCH SOFFIT
(as seen from below)

Fig. 2.22 Transverse and diagonal cracks at the intrados of arch barrel

2.5 Bed Blocks

Cracks in bed block generally arise for two reasons:

1. Improper seating of bearings resulting in uneven contact area below the bearing and gap between bed block and base plate of bearing (Fig. 2.23 & 2.24).
2. Cracking and crushing of masonry under the bed block (Fig. 2.25).

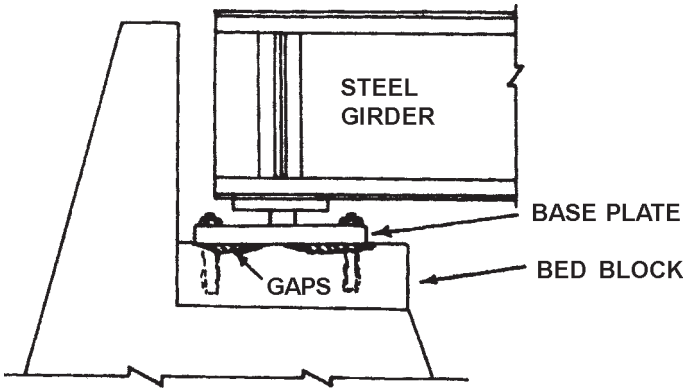

Fig. 2.23 Gaps between bed block and base plate of bearing due to uneven contact area

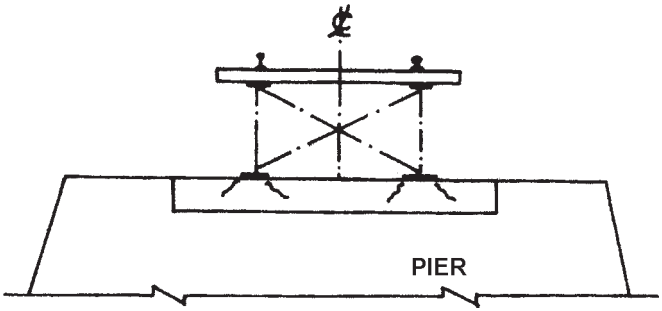

Fig. 2.24 Cracks in bed block due to improper seating of bearings

The bed blocks can start loosening if they are of isolated type. In such cases normally a gap develops between the surface of the bed block and the surrounding masonry. But many times, the term 'shaken bed block' is used to indicate falling of mortar from the pointing done at the joints between the bed block and the adjoining masonry. This is shown in Fig. 2.26.

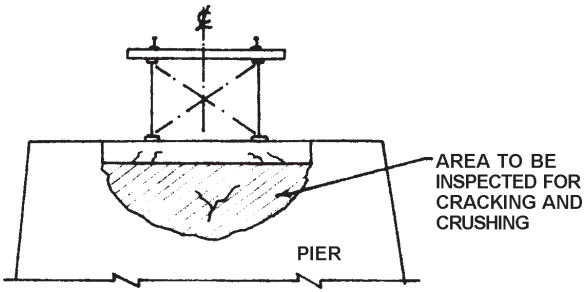

Fig. 2.25 Cracks in bed block due to cracking and crushing of masonry under the bed block

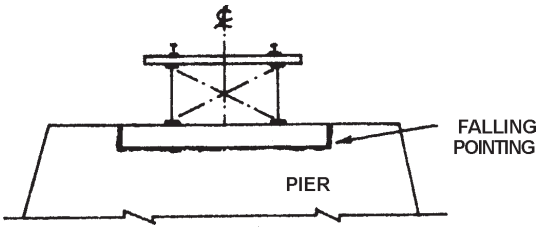

Fig. 2.26 Shaken bed block

This is basically attributable to an inherent flaw in carrying out pointing work. After a mason completes cement mortar pointing, a train running on the bridge before adequate time has passed will result in falling of this pointing as cement would not have time to set. Another drawback is that most of the times curing of the pointing is neglected. Falling of pointing is not synonymous to ‘shaken bed blocks’. In 90% of the cases of stone bed blocks, this problem can be overcome by using epoxy mortar for pointing in these locations.

If a bed block is suspected for shaken condition, it must be inspected under traffic and during the inspection if visible movements are noticed in the bed block then only it should be declared as ‘shaken’ and not otherwise.

A number of very good stone bed blocks are prematurely and even unnecessarily replaced by a weaker material such as concrete because of improper diagnosis of the defect of falling mortar pointing.

2.6 Bearings

One of the most important parts of a bridge is the bearing which transfers the forces coming from the superstructure to the substructure and allows for necessary movements in the superstructure. Bearing could be of the following tipes

1. Sliding bearings (Fig.2.27)
2. Roller and Rocker bearings (Fig. 2.28)
3. Elastomeric bearings (Fig.2.29)
4. P.T.F.E. Bearings. (Fig.2.30)

2.6.1 Inspection and maintenance of steel Bearings

Inspection of steel bearing are dealt here in the following paragraph, details regarding maintanance shall be given in the chapter 8, maintenance of steel bridges.

1. The bearings of all girder bridges should be generally cleaned and greased once in three years.
2. In case of bridge carries LWR, the sliding bearing shall be inspected during March and October every year and cleaned of all foreign material. Lubrication of bearing shall be done ones in two years. As per item no. 1046 of BSC-82 the Railway Board order that RDSO shall issue necessary C/S when LWR is carried over girder bridge.

Sliding bearings (Fig. 2.27) should be inspected for the following:

1. Oiling and greasing of plain bearings is required to be done once in 3 years to ensure their proper functioning.
2. Excessive longitudinal movements of the superstructure result in shearing of location strips as well as anchor bolts connecting the base plates.
3. In those cases where phosphur bronze sliding bearings are used, only periodical cleaning of the area surrounding the bearing is required.
4. Many times a uniform contact between the bottom face of the bed plate and top surface of the bed block is not ensured resulting in gap at certain locations. This leads to transfer of

excessive impact forces to the bed block under live load. This may lead to cracking and crushing of bed block and masonry underneath.

In the case of flat bearings, the girder is lifted a little over 6mm, the bearing surfaces cleaned with kerosene oil and a mixture of black oil, grease and graphite in a working proportion should be applied between the flat bearings and the girder lowered. For spans above 12.2 m, special jacking beams will have to be inserted and jacks applied.

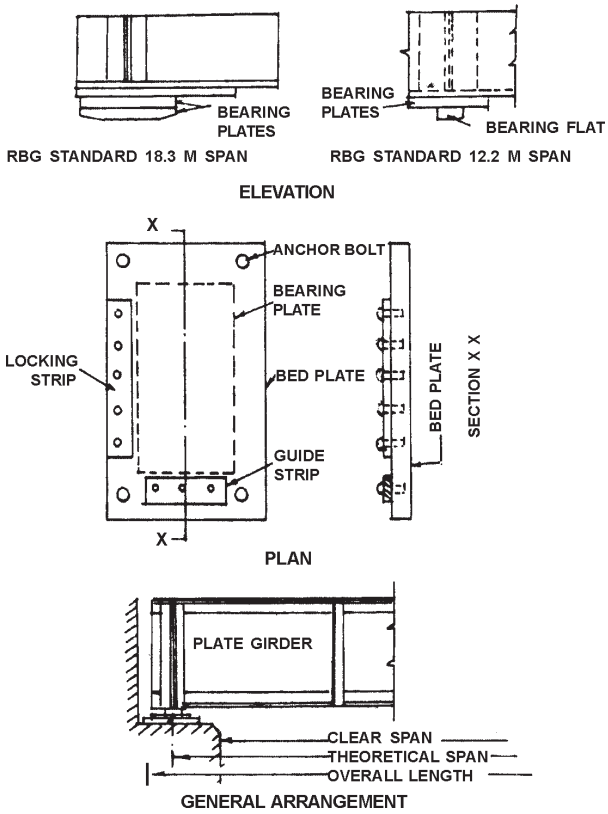

Fig. 2.27 Centralised sliding bearings

The rollers and rockers are lifted from their position by adequate slinging. The bearings are scraped, polished with zero grade sand paper and grease graphite of sufficient quantity to keep surfaces smooth should be applied evenly over the bearings, rockers and rollers before the bearings are lowered. The knuckle pins of both the free and fixed end should also be greased at this time. While lifting fixed ends, the space between girders (in case of piers), or between the girder and the ballast wall (in case of abutment), at free ends should be jammed with wedges to prevent longitudinal movement of the girder.

Phosphor bronze bearings need not be greased as they are corrosion resistant and retain the smooth surface and consequently the limited initial coefficient of friction of 0.15.

In case of segmental rollers, it should be seen that they are placed vertically at mean temperature. It will be better to indicate, in the completion drawings of bridges/stress sheets, the maximum expansion with range of temperature to which it is designed (by indicating the maximum and minimum temperature), so that the slant at the time of greasing can be decided depending on the temperature obtaining at the time of greasing.

Roller and Rocker bearing shall be inspected for 2.6.1 (4) and for following :

5. The rockers, pins and rollers should be free of corrosion and debris. Excessive corrosion may cause the bearing to “freeze” or lock and become incapable of movement. When movement of expansion bearings is inhibited, temperature forces can reach enormous values. The superstructure will be subjected to higher longitudinal forces.
6. The tilt of segmental rollers should be measured with respect to reference line and the temperature at the time of measurement should also be noted.
7. In case of roller bearings with oil baths, dust covers should invariably be provided to keep the oil free from dirt.
8. As per item no 1042 of BSC-82, Railway Board has order that RDSO shall issue necessary C/S to the effect that oil in oil bath bearing to be replaced once in five year completly.

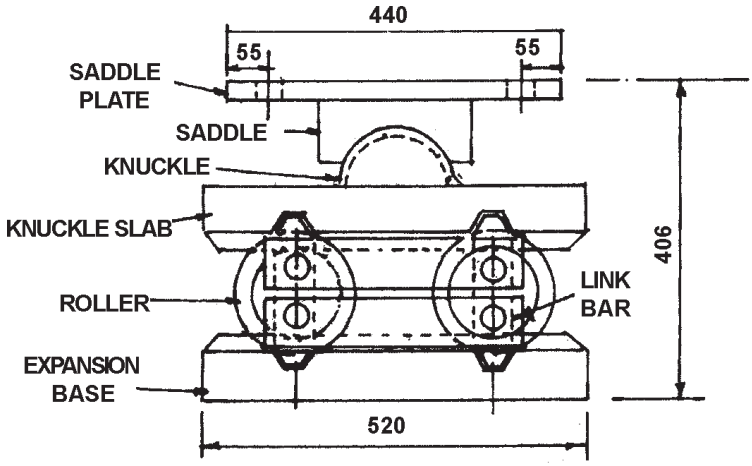

FIG. 2.28 (a) Roller and rocker bearing - Expansion Bearing - Roller end

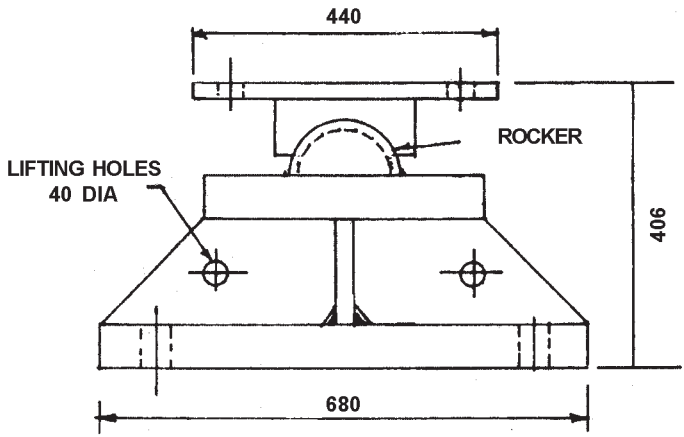

FIG. 2.28 (b) Roller and rocker bearing - Fixed Bearing - Rocker end

2.6.2 Elastomeric bearings

Elastomers are polymers with rubber-like properties. Synthetic rubber (chloroprene) and natural rubber with a Shore hardness of approximately 50 to 70 have been extensively used in bridge bearings. Elastomers are very stiff in resisting volume change but are very flexible when subjected to shear or pure uniaxial tension. Most elastomers stiffen drastically at low temperatures. Natural rubber stiffens less than chloroprene. Elastomers creep under continuously applied stress and are subject to deterioration due to high concentration of ozone or severe chemical environment. Chloroprenes usually creep more but are less susceptible to chemical deterioration.

Elastomeric bearing will permit translation along any direction and rotation around any axis. The longitudinal movement of the bridge deck due to temperature and other effects are accommodated upto a certain limit by the shear deformation of the bearing. Rotation of the girder at the bearing point is also accommodated by a flattening of the bearing in the direction of the rotation.

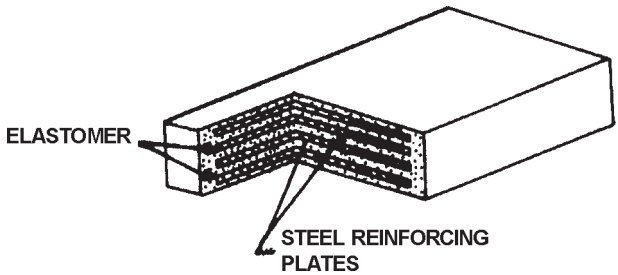

Fig. 2.29 Elastomeric laminated bearing

Reinforcement is required between horizontal layers of the elastomers to prevent any outward bulging or splitting under service load. The design of elastomeric bearing takes into account the dimensions of the bearings by the term shape factor. The shape factor is defined as ratio of effective plan area to the force free surface area (force free perimeter multiplied by actual thickness of internal layers of elastomers). Low values of shape factor should be avoided since bulging and low elastic modulus are likely to occur. Closely spaced steel plates are used to increase the shape factor.

The vertical stiffness is a function of shear modulus and total thickness of elastomer. Typical elastomeric bearing have a shear modulus in the range of 8kg/cm for long term shear deformation and 16 kg/cm for short term shear deformation. The UIC practice is to permit a translation of 0.7 h where 'h' is the effective elastomer thickness. The British practice is to restrict the translation movement to 0.5 h.

Another factor in choosing the right type of bridge bearings is the hardness of the elastomer material. This is typically specified by durometer or shore hardness and is limited to a maximum value of 70. Higher values for the material result in bearings which are too stiff.

The following codes and specifications are used for the design of elastomeric bearings.

1. BS 5400 Part 9, U.K.
2. UIC 772 R
3. UNI 10018 – 72, Italy
4. AASHTO Standard specifications for highway bridges,U.S.A.
5. IRC 83 (Part II) – 1987.

The greatest problem encountered with elastomeric bearings pertains to the material which does not conform to the specifications. They exhibit defects like cracking, splitting, bulging or tearing. The first sign of distress in elastomeric bearings is the onset of horizontal cracks near the junction of rubber pad and steel laminate. The bearings should also be examined for excessive rotation which is usually indicated by excessive difference in thickness between the back and the front of the bearing.

Inspection and maintenance of elastomeric bearings :

The elastomeric bearings are considered largely to be maintenance free. However due to possible deficiencies in manufacture and installation, these bearings may show signs of distress or develop malfunctioning. Before any malfunctioning of the bearings leads to distress in the girders or substructure, it should

be detected and preventive actions take It is, therefore, necessary to undertake periodical inspection of elastomeric bearings. The inspecting official should look for the following aspects:

- Correct position
- Excessive shear
- Excessive bulging
- Separation of rubber from steel lamination
- Cracking and tearing of elastomer
- Flattening out
- Off-loading of one edge due to excessive rotation

The elastomeric bearing will undergo deformations due to load and movement of the girder, the bearing shall be examined for the followings:

a) compression (flattening),

b) bulge and

c) shear.

These are signs of normal functioning of the bearing and judgement regarding distress can be formed only on the basis of personal experience of the inspecting engineer. As a general guide, however, the following movements can be considered to be excessive:

a) Shear deformation more than 50% of height of elastomeric pad

b) Rotation leading to off-loading of an edge

c) Compression more than 5% of height of the pad.

Generally, malfunctioning of the elastomeric pad would result in distress either in the girder or in bed block and the area close to the bearing should be examined for cracking or spalling of concrete.

Elastomeric bearings may require replacement every fifteen or twenty years. For this purpose, the girder (steel, R.C.C. or P.S.C.) will have to be lifted up at predesigned and predetermined locations.

2.6.3 Poly Tetra Fluoro Ethylene (P.T.F.E.) bearings

PTFE is a short form of poly-tetra fluoro ethylene. The coefficient of friction between stainless steel and PTFE is quite low. The mating surface, which forms the upper component, is stainless steel with good surface furnish. The PTFE can be unfilled or filled with glass fibre or other reinforcing material. Its bonding property is very poor. Hence, it is preferable to locate the PTFE by confinement and fitting of half the PTFE thickness in recess in a metallic matrix. Lubricating the mating surface by silicone grease reduces the coefficient of friction.

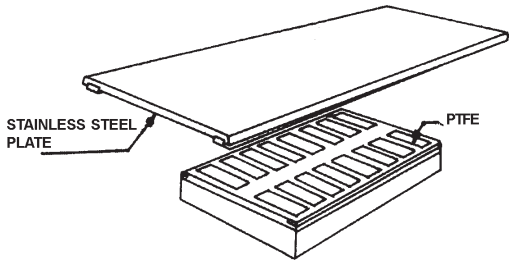

Fig. 2.30 PTFE bearing

PTFE known for extreme chemical resistance and excellent dielectric properties under a wide range of working temperature. The static and dynamic coefficient of friction are almost same for this material. Pure PTFE has a low compressive strength, high thermal expansion and very low thermal conductivity and is, therefore not very suitable for heavy bridge bearings. However, these detrimental properties can be improved by the use of fillers like glass fibre and bronze.

The low friction surface between PTFE and stainless steel is used in bridge bearings either to provide rotation by sliding over cylindrical or spherical surfaces or to provide horizontal sliding movement over flat surfaces or a combination of both. This type of bearing is also used in incremental launching construction where the girder is launched longitudinally in stages with the help of jacks. Where there are large displacements accompanied with relatively small loadings as in case of centrifugal loads, wind loads or seismic loads PTFE slide bearings are utilized.

There are firms manufacturing self-aligning spherical bearings designed to support loads from 50 tonnes to 3000 tonnes for a mean concrete stress of 200 kg/cm2. This uses PTFE sliding surface of rotation as well as translation. The coefficient of friction of PTFE – Stainless Steel bearings reduces with increase in contact stress. see Table 2.1.

Table 2.1 : (contact stress v/s coefficient of friction of PTEF - stainless steel bearing).

Contract Stress (kg/cm2)	Coefficient of friction	
	Unlubricated pure PTFE	Lubricated pure PTFE
50	0.16	0.08
100	0.12	0.06
200	0.08	0.04
300 & above	0.06	0.03

This property is advantageously used since any overload will reduce the frictional coefficient thereby maintaining the same stress level in sub-structures.

The following codes and specifications are used for the design of P.T.F.E. bearings.

1. BS 5400 Part-9, U.K.
2. AASHTO – Standard specifications for highway bridges, U.S.A.

To preserve a durable and uniform sliding surface between the stainless steel plate and P.T.F.E. elements, dirt should be kept away from the interface. Otherwise, the bearing will not function and this may lead to excessive frictional forces transferred to the substructure. Lubricating the mating surface by silicone grease reduces the coefficient of friction.

2.6.4 Pot-cum-PTFE bearings

Pot-cum-PTEF bearings have been used in important bridges like 3rd Godavari Bridge at Rajamundary (90m), Zuari and Mandori Bridges (120m) on the KRCL, Tansi Bridge(71.4m+102m+71.4m), Dudhar Bridge (64m+92m+64m) on Jammu Udhampur Rail link. Pot-cum-PTEF bearings are much thinner and permit large movement compared to roller bearings.

The Pot-cum-PTFE bearings are designed and manufactured so as to make it almost maintenance free. However, the surrounding area of the bearings shall always be kept clean and dry to avoid damage to the bearings.

Suitable easy access to the bearing shall be provided for inspection and maintenance. Provision shall be made for jacking up the superstructure so as to allow repair/replacement of the bearings.

Inspection of bearing at site is required from time to time to ascertain the performance of the bearings. Periodic nominal maintenance of bearing shall be carried out in order to ensure better performance and longer life. The bearings are required to be inspected at an interval of one year for the first five years and at an interval of two years thereafter. However, the bearings shall also be examined carefully after unusual occurrences, like movement of abnormal heavy traffic, earthquakes, cyclones and battering from debris in high floods. The inspection shall be preceded by careful cleaning of the bearings and its surrounding space, depending on the actual conditions around the bearings, e.g., deposit of salt, debris, dust or other foreign material.

Common problem with Pot-cum-PTEF bearings

In Pot-cum-PTEF bearings, confined elastomeric pad is used to permit rotation under high compressive stress. Elastomeric pad behaves like a viscous fluid. There is tendency of leakage of elastomeric material if the sealing ring is ineffective. On the other hand if tolerance between metallic cylinder and pot is very light, the rotational capacity of the bearing is affected. In fact satisfactory rotational distribution could be achieved only when normal load more than 25% of bearing capacity is applied. Another problem is inability

of steel pot to withstand the transverse loading. It is also observed that the PTEF element also flow out under heavy load.

At the time of placing the bearing temperature correction is necessarily to be applied and the expansion end of the bearing and the point of intersection shall match under full live load with impact. While fixing bearing care is taken for vibration and accidental impact, some anchorage should be provided and there should not be any voids below the bearings.

Inspection and Maintenance of Pot-cum-PTFE bearings

1. Measurement of movement - During inspection at site, measurements are required to be taken and documented to compute its movement and rotation values in relation to their design values to ascertain whether the performance of the bearings are satisfactory. To ascertain maximum movement, measurement should be taken once during peak winter (early morning) and once during peak summer (after noon) and corresponding atmospheric temperature should be recorded. The recoded value of movement shall be compared with the design values.
2. Measurement of dimensions - Overall dimensions of the bearings is required to be measured and comparedwith the actual dimensions to ascertain any excessive stress or strain on the bearing.
3. Evidence of lock in condition- If any moveable or rotating part of a bearing is found to be in locked-in/ jammed condition, necessary rectification measures shall be taken immediately.
4. Evidence of corrosion - If corrosion of any part of exterior exposed steel surface of the bearing is detected the following measures may be taken.

   i) Detect affected part

   ii) Wire brush the affected portion to clean the rust.

   iii) Apply protective coating as per manufacturer's specifications.
5. Condition of the adjacent bridge structure - The adjacent structure of the bearings are also required to be inspected for any damage and necessary actions to repair the same, should be initiated. The root cause of defect should be

searched and remedial actions should be planned to avoid recurrence of the problem.

Results and Actions

The results of every inspection to be recorded in the inspection report and shall be classified in each case into the following types of action:

i) No action

Ii) Further measures/long-term monitoring or design analysis needed (e.g.) considering extreme temperatures/ exposures, variation of loads, etc)

iii) Minor repair works e.g. cleaning, repainting etc.

iv) Repair or replacement of entire bearing or parts of the bearing.

In case of defects where the cause of necessary actions cannot be determined by the inspecting person or the responsible bridge engineer, the design engineers/manufacturer should be consulted.

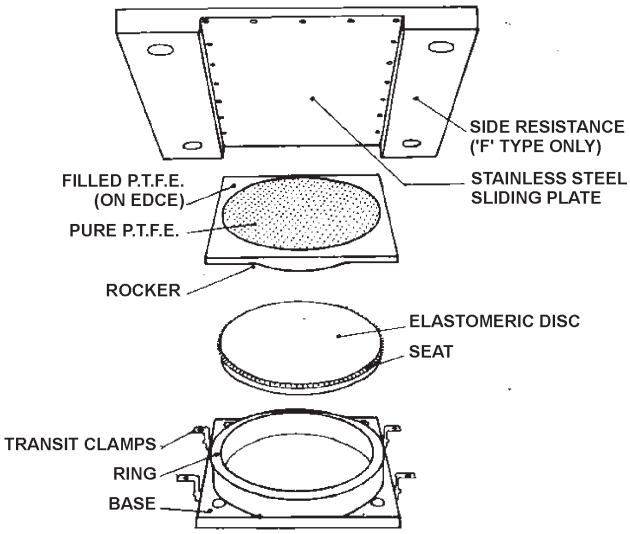

Fig. 2.31 (a) Schematic diagramme of Pot-cum PTFE bearing

Fig. 2.31 (b) Installation of Pot-cum PTFE bearing

2.7 Inspection of steel bridges

Steel bridges can be classified into the following groups:

1. RSJ/Plate girder bridges
2. Open Web girder bridges
3. Composite bridges

The following aspects should be noted while inspecting steel girder bridges.

2.7.1 Loss of camber

Plate girders of spans above 35 metres and open web girders are provided with camber during fabrication or erection. Camber is provided in the girder to compensate for deflection under load. Camber should be retained during the service life of the girder if there is no distress. It is checked by using dumpy level or precision level on all intermediate panel points. Camber of a girder indicated in the stress sheet is the designed camber. Camber observations are required to be taken at the same ambient temperature as adopted for the original camber mentioned in the stress sheet. However getting design camber after erection is an indication of good fabrication, assembling and erection work. After erection girder

will be subjected to service load. Initial camber is recored once the girder is place into service. The camber as observed during detailed inspection is compared with the initial camber recorded after erection. If one observes loss of camber, then the bridge girder should be thoroughly inspected to identify the cause. In case camber is very less or even nil and initial camber is not known OR if loss of camber is suspected; it is recommended to record the camber every year or even at an interval of six months as against prescribed duration in OWG of 5 years. Successive loss of camber over several observation is a cause of worry. This may be on account of:

1. Heavy overstressing of girder members
2. Overstressing of joint rivets at a splice in a plate girder or at the gusset in case of open web girder
3. Play between rivet holes and rivet shanks.

Loss of camber should be viewed seriously and one may have to impose suitable speed restriction depending on the identified cause and even if the cause is yet to be identified.

2.7.2 Distortion

The girder members which are likely to show signs of distortion are:

1. Top chord members (on account of insufficient restraint by bracings)
2. Tension members made up of flats (because of mishandling during erection)
3. Diagonal web members generally subjeted to reversal of loading.
4. Top flanges of plate girders

Distortion is also possible if longitudinal movement of girders due to temperature variation is restrained by badly maintained bearings. The distortion can be checked by piano wire by taking reading at every panel point.

Note : For more detail read IRICEN publication on "Bridge Bearings".

2.7.3 Loose rivets and HSFG bolts

Rivets which are driven at site and rivets which are subjected to heavy vibrations are prone to become loose. Corrosion around rivets also causes their loosening. (fig. 2.32) To test whether a rivet is loose, left hand index finger is placed on one side of the rivet head as shown in Fig. 2.33 so that your finger touches both the plate and the rivet head. Then hit the other side of the rivet head firmly with a light hammer weighing 110 gm. If the rivet is loose, vibration of the rivet will be felt by the left hand index finger. The loose rivets are marked with white paint and entered in loose rivet diagram and programmed for replacement.

Fig. 2.32 Loose rivet

Testing for loose rivets by this method is not allowed for the girders which are metalized (aluminum) so as not to cause mechanical damage to the coating layer. The loose rivet in that case has to be identified by rust streaks or other such indirect means.

The inspection of High Strength Friction Grip (HSFG) bolts shall be done visually for broken and loose bolts. Hitting HSFG bolts for checking looseness is not allowed. The broken/loose bolts, if any, shall be marked and shall be replaced expeditiously by new HSFG bolts, retightening of loose bolts are not allowed in any case. HSFG bolts shall be painted as per normal painting schedules and painting methodologies.

Note: When any girder component/joint is to be replaced, the complete joint shall have HSFG bolts. HSFG bolts cannot be used for replacement of isolated loose rivets.

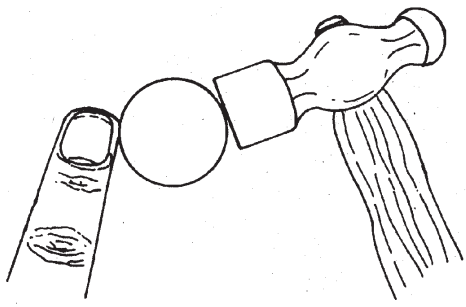

Fig. 2.33 Testing rivet for looseness

Critical areas for loose rivets / HSFG bolts are:

1. Top flange of plate girders
2. Connection between rail bearer and cross girders in open web girders
3. Connection between cross girders and bottom/top boom in open web girders
4. Gussets at panel points of open web girders.

2.7.4 Corrosion

Steel structures are sensitive to the atmospheric conditions and splashing of salt water. It is one of the major factors causing considerable corrosion to steel work. Corrosion eats up the steel section and reduces its structural capacity, which if not rectified in time, will lead to necessity of replacing the girder. At certain locations in a steel structure, moisture is likely to be retained for a long time; these places are prone to severe corrosion.

These locations can be

1. Where the top flang is coming in contact with sleeper fig. 2.34
2. Water pockets formed on account of constructional features.
3. Places where dust accumulates.

Fig. 2.34 Corrosion of top flange due at seat sleeper

Once the corrosion affect the top flange plate if even advanced and spoils the rivet connection with cross bracings, vertical stiffners etc. (Fig. 2.35 a & b)

Fig. 2.35 (a) Corrosion at riveted connection

Fig. 2.35 (b) Corrosion at riveted connection

It is the presence of moisture which aggravates corrosion. Therefore, proper drainage on structures such as troughed decks or boxes formed at panel points of through girders or concrete decks must be ensured. On girders provided with steel trough/ concrete decks and ballasted track, deep screening of ballast is rarely carried out. This results in blocking of drainage holes and impounding of water. Further, such situation leads to seepage of water through troughs and concrete decks, finally resulting in corrosion of top flange and reinforcement.

Fig. 2.36 Rivet connections of bracing with top boom

Special attention should be paid to the following locations:

1. Sleeper seats fig. 2.34
2. Flooring arragement and connections with bottom chords, cross girders, rail bares.
3. Gusset connection of top lateral bracing to top boom.
4. Inside fabricated boxes of bottom booms
5. Area in the vicinity of bearings
6. Trough of ballasted decks
7. Underside of road over bridges
8. Seating of wooden floors on FOBs and floor beam & main girder connection in case of CC Paving.
9. Interface between steel and concrete in composite girder
10. Parts of bridge girders exposed to sea breeze and salt water spray.

It is important to assess the magnitude of corrosion and consequent loss of effective structural section and also identify the cause of corrosion. Members and connections subject to high stress fluctuations and stress reversals in service are the most common suspect in respect of corrosion. Due to corrossion, loss of cross sectional area takes place, which may leads to development of cracks (Fig. 2.37).

Fig. 2.37 Crack and Corrosion at sleeper seat

2.7.5 Fatigue cracks

Fatigue is the tendency of the metal to fail at a lower stress when subjected to cyclic loading than when subjected to static loading. Fatigue is becoming important because of the growing volume of traffic, greater speed and higher axle load.

Fig. 2.38 Development of crack at riveted connection

Cracking because of repeated stresses is one of the major causes of potential failures in steel structures. Cracking in an angle diagonal of the truss usually starts from a rivet or bolt nearest to the edge of the member. The crack then progresses to the edge of the leg and continues through the other leg to complete the failure. Fatigue cracking is found usually where the local stress is high such as at connections or at changes in geometry. (Fig. 2.38). One should look for such fatigue cracks where the intensity of traffic is heavy and the steel is old.

2.7.6 Early steel girders

There are a number of steel girders on Indian Railways fabricated before 1895 / laid before 1905. During those early times, the steel manufacturing technology was not fully developed and steel manufactured in those times contained excessive phosphorous. Concepts of quality control were apparently vague and steel used in the different parts of even the same bridge was found to have varying content of phosphorous. Higher phosphorous content makes the steel brittle and such girders can collapse suddenly because of brittle fracture.

Therefore, it is necessary to conduct detailed examination of such steel girders at an increased frequency with a careful and critical eye. It is also necessary to ascertain the chemical composition of steel.

Even steel which was manufactured between 1895 and 1905 should be treated as ‘suspect’ and inspected at an increased frequency.

2.8 Inspection of concrete girders

Factors causing deterioration in concrete can be listed as follows:

1. Poor design details
2. Construction deficiencies like inadequate cover, improper compaction and curing etc.
3. Temperature variation between one side and another and between the inside and outside of a box girder.

4. Chemical attack
5. Reactive aggregate and high alkali cement
6. Moisture absorption
7. Damage caused by collision
8. Overstress
9. Corrosion of reinforcing bars
10. Movement in foundation.

Following defects can be noticed in concrete girders :

2.8.1 Cracking

Location of cracks, their nature and width can be used to diagnose the cause. Minor hair cracks showing map pattern generally occur because of shrinkage of concrete and hence not of much structural significance.

Transverse cracks at the bottom of RCC beams can normally occur and if such cracks are very thin and spaced some distance apart, they do not have much significance (Fig. 2.39). However, if the transverse cracks are wide and show a tendency to open out during passage of live load they are serious; and proper analysis and testing should be conducted to assess the strength of the beams. Diagonal cracks in the web near the support (Fig. 2.39) indicate excessive shear stress and are of serious nature. Cracks which occur near the bearings may be on account of seizure of bearings or improper seating of bearings.

Ref: BS-48 Guidelines for Inspection Maintenance and Rehabilitation of Concrete Bridges Sept-2002
Ref: BS-88 Technical Literature on corrosion/carbonization protection in concrete structures March-2008

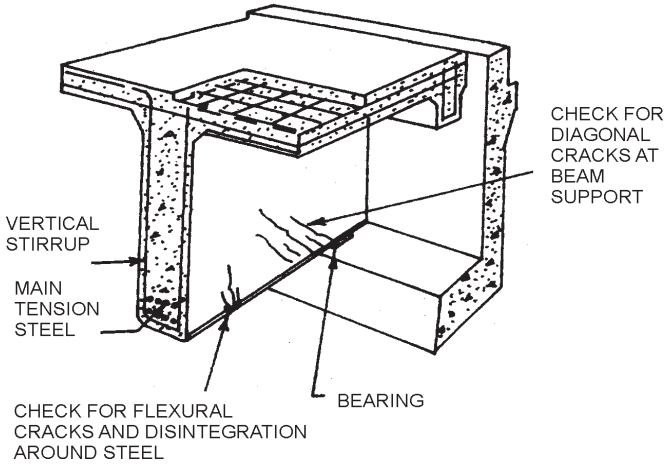

Fig. 2.39 Cracks in concrete girders

Longitudinal cracks at soffit of slabs or beams running along reinforcement bars indicate corrosion of reinforcement. These are mainly because of honeycombing in concrete and inadequate cover which lead to ingress of moisture and early corrosion of reinforcement. The corroded metal has more volume as compared to the original reinforcement. Bursting forces exerted by expanding reinforcement ultimately leads to cracking and spalling of concrete around the reinforcement, specially towards the cover side of concrete (Fig. 2.40).

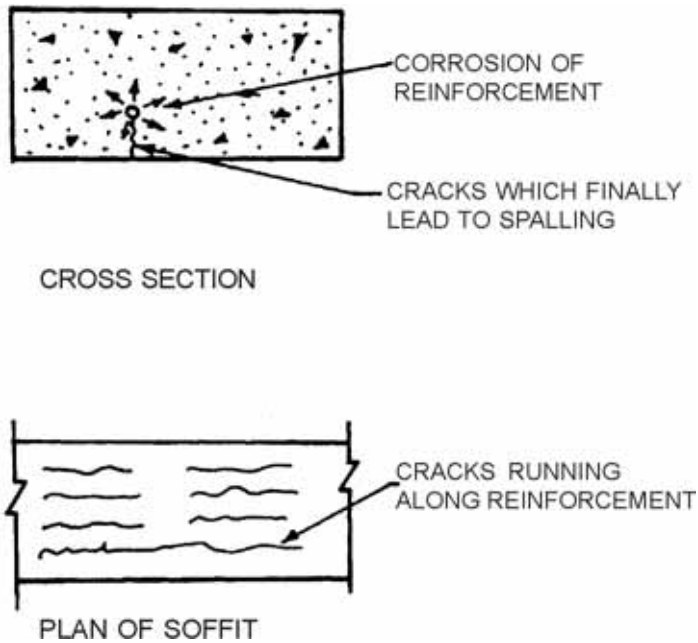

Fig. 2.40 Cracks due to corrosion of steel reinforcement

2.8.2 Delamination

Delamination is separation along a plane parallel to the surface of the concrete. These can be caused by corrosion of reinforcement, inadequate cover over reinforcing steel and fire. Besides visual inspection, tests for measuring cover and electrical potential should be carried out if delamination is significant. Bridge decks and corners of girders are particularly susceptible to delamination.

2.8.3 Scaling

It is the gradual and continuing loss of mortar and aggregate over an area. Scaling may be light, medium, heavy or severe depending upon the depth and exposure of aggregate. Scaling is

usually observed where repeated freeze and thaw action on concrete takes place or when the concrete surface is subjected to cycles of wetting and drying or due to concentrated solution of chloride de-icers. Location, area and character of scaling should be recorded.

2.8.4 Spalling

Once the cracks are noticed, proper remedial measures should be taken, else it may lead to spalling. Spalling generally occurs with the transfer of excessive dynamic forces (in the vicinity of bearings) or with uninhibited corrosion of reinforcement. Tendency to spall can be identified by tapping the area with a small chipping hammer when hollow sound is heard. Spalling causes reduction in cross sectional area of concrete and also exposure of the reinforcing bars or prestressing tendons. Spalling may also occur wherever there is honeycombing or bad compaction or bad quality of concrete.

2.8.5 Wearing of concrete

Fig. 2.41 shows cross-section of concrete deck. It shows a wearing coat of adequate thickness with necessary slopes over parent concrete. It is essential to provide wearing coat as at this surface ballast is going to abrade with concrete. Non-placement of wearing coat will lead to wear of concrete surface and formation of depressions which will hold water and start seepage. Once this situation develops, it is very difficult to correct. Fig. 2.42 show formation of depressions due to abrasion of wearing coat.

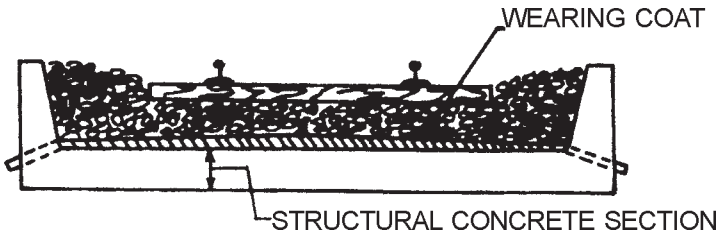

Fig. 2.41 Detailing of concrete deck slab

Fig. 2.42 Formation of depressions due to absence of wearing coat

2.8.6 Reinforcement corrosion

Hardened concrete is alkaline in nature having pH value ranging from 11-13. This is called passivity and it inhibits corrosion of embedded reinforcement acting like a shield "Suraksha Kawach". This is due to presence of $Ca(OH)_2$ in concrete. Carbonation of concrete is a process by which carbon dioxide from the air penetrates into concrete through pores and reacts with calcium hydroxide to form calcium carbonates. CO_2 by itself is not reactive. But in the presence of moisture, CO_2 changes into dilute carbonic acid, which attacks the concrete and also reduces alkalinity of concrete (i.e. pH value reduces).

In actual practice CO_2 present in atmosphere permeates into concrete and form carbonates and reduces the alkalinity of concrete. The pH value of pore water in the hardened cement paste, which was around 13, will be reduced to around 9.0. When all the $Ca(OH)_2$ become carbonate, the pH value will reduce up to about 8.3. In such a low pH value, the protective layer gets destroyed and the steel is exposed to corrosion.

The carbonation of concrete is one of the main reasons for corrosion of reinforcement. Of course oxygen and moisture are the other components required for corrosion of embedded steel.

A common and simple method for establishing the extent of carbonation is to treat the freshly broken surface of concrete with a solution of phenolphthalein in diluted alcohol. If the $Ca(OH)_2$ is unaffected to CO_2 the colour turns out to be pink. If the concrete is carbonated it will remain unchanged showing the original colour of concrete. It should be noted that the pink colour indicates that enough $Ca(OH)_2$ is present but it may have been carbonated to a lesser extent. The colour pink will show even for a pH value of about 9.5.

This defect can be due to improper concreting as well as due to improper storing of reinforcement before placing in the girder. Improper drainage of deck slab could also lead to corrosion. Prestressing wires also fail because of stress corrosion in addition to the corrosion induced by environmental conditions. The corrosion of reinforcement generally leads to cracking or spalling of concrete. Corrosion is indicated by staining of concrete (deep brown or red colour).

The reinforcement corrosion problem basically arises from seepage of water through concrete decks. Reason for this is again improper drainage arrangements during construction and mucked up ballast on concrete decks.

2.8.7 Cracking in prestressed concrete structures

Cracking occurs in the vicinity of anchorages on account of bursting and spalling forces. At midspan, the cracking in the tensile face may be on account of higher super imposed loads. Cracks can appear in the compressive face because of higher initial prestressing force but such cracks close up under the passage of trains.

Cracking in PSC girders occurs in many cases because of construction sequence e.g. the 'I' girders are precast and the transverse RCC slab and diaphragms are cast in place after erection of the girders. This sequence leads to cracks at the interface of RCC slab and top of precast 'I' girder and interface of diaphragms and webs of 'I' girder (Fig. 2.43). These cracks basically occur on account of differential shrinkage between the concrete of pre-cast element and cast-in-place element. Obviously these cracks can not be avoided and should not be viewed as serious cracks at the first instance. They must be kept under observation along with the camber of the girder. These cracks may be grouted / sealed. But before taking any remedial action, these should be kept under watch and allow them to develop fully, otherwise after any grouting these cracks will reappear.

Ref: BS-14 Durability of Concrete Structures Jan-2001.
Ref: BS-88 Technical Literature on corrosion/carbonization protection in concrete structures March-2008

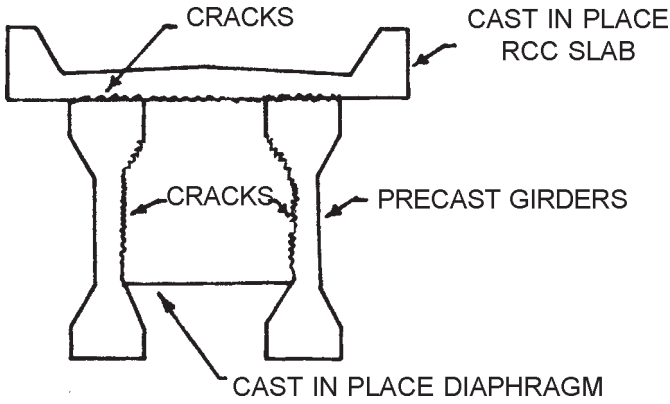

Fig. 2.43 Cracks at interface of precast and cast in place concrete elements

Any loss of camber may indicate serious problem at the interface at the junction of 'I' girder and slab.

2.8.8 Loss of camber

Indian Railways Bridge Manual (IRBM), 1998 vide Para 1107.15 prescribes yearly recording of camber at centre of span. The camber of prestressed concrete girders should be recorded and compared with the previous values. Temperature has great influence on the deflection. Therefore, temperature of girder should be recorded and the deflection should be meassured around the same temperature at which it was originally done. For camber measurement, method given in IRBM at Annexure 11/ 4 or any other suitable method may be adopted.

Loss of camber may be caused by:

1. Settlement
2. Overloading
3. Deterioration of concrete
4. Stress corrosion of reinforcement
5. Loss of prestress

Progressive loss of camber is an important indication of

deterioration in the condition of bridge and, therefore, should be thoroughly investigated.

2.8.9 Locations to be specially looked for defects

Table 2.2 lists out the salient defects, which should be specially looked for during gereral/routine inspection of various elements of concrete bridge superstructure.

Table 2.2 Locations to be specially looked for defects

Locations	Look for
All over	General condition of the structure and prestressed components in particular condition of concrete corrosion signs Scaling of concrete Spalling of concrete Efflorescence Condition of construction joints
Anchorage Zone (at deck slab)	Cracks Bursting/ crushing at the time of stressingand subsequent poor sealing of cracks Rusting Condition of cable end sealing
Top and bottom of deck slab	Cracks developed due to excessive tension Delamination Blocking of drainage Worn out wearing coat Damage by abrasive action of ballast (once in 5 years) Seepage Corrosion signs Leaching Scaling Damage due to accident or any other causes

table 2.2 contd...

Locations	Look for
Support point of bearings	Whether the seating of girder over bearing is uniform Condition of anchor bolts, if any Spalling/crushing/cracking around bearing support due to failure in shear
Top and bottom flange of I-girder	Spalling/scaling Rust streak along reinforcements/cable cracks
Bottom slab in box girder	Cracks due to overloading or loss of prestress Spalling/scaling Corrosion signs Drainage
Webs	Cracks (generally diagonal) due to shear failure. Corrosion signs
Diaphragms	Cracks at junction Diagonal cracks at corners Diagonal/vertical cracks around opening Conditions of diaphragm opening
Junction of slab and girder (in case of girders)	Separation
Drainage spouts	Clogging/up word projection of spout Physical condition Adequacy of projection of spout on the underside
Joints in segmental construction	Cracks Physical appearance Corrosion signs

table 2.2 contd...

Locations	Look for
Expansion	Check whether the expansion joint is free to expand and contract Condition of sealing material i) Hardening/cracking in case of bitumen filler ii) Splitting, oxidation, creep, flattening and bulging in case of elastomeric sealing material

2.9 Track on girder bridges

2.9.1 Approaches

Generally track on approaches of girder bridges has a tendency to settle down with respect to the level of track on the bridge proper. It is preferable to continue the same level of the bridge on the approaches for some distance. The track on the approaches should be in alignment with the track on the bridge. The gauge, cross level and packing under the sleepers should be checked. Rail joints should be avoided within 3 metres of a bridge abutment. The condition of the ballast wall should be checked and repairs carried out wherever necessary. Full ballast section should be maintained for atleast upto 50 metres on the approaches. This portion of the track should be well anchored.

2.9.2 Track on bridge proper

It should be ascertained whether the track is central on the rail bearers and the main girders. It should also be checked whether the track is in good line and level. Departure from line is caused by

1. Incorrect seating of girders
2. Shifting of girders laterally or longitudinally
3. Incorrect seating of bridge timbers on girders
4. Varying gauge or creep

Departure from level is caused by errors in level of bed blocks or

careless timbering. The adequacy of clearances of running rails over ballast walls or ballast girders at the abutments should be checked.

2.9.2.1 Track with bridge timber

The condition of timbers and fastenings should be checked. The spacing and depth of timbers should be as per Table 2.3

Table 2.3 Spacing and depth of timbers

Gauge	Max. clear distance (mm)	Min. depth exclusive of notching (mm)	Length of sleepers
BG	460	150	Outside to outside of girder flanges plus 305 mm, but not less than 2440 mm
MG	305	150	Outside to outside of girder flanges plus 305 mm, but not less than 1675 mm

At fishplated joints the clear spacing should not exceed 200 mm. Squareness of timbers must be ensured. Bridge timbers requiring renewals should be marked with paint and renewals carried out. To prevent splitting of the ends of the timbers, end binding or end bolting must be done. End binding is done using 6 mm MS bars at 75 mm inside the end of the timber. End bolts should be provided on timbers which have developed end splits. It is necessary to use 75x75x6 mm plain washers if end bolts are used.

2.9.2.2 Track with steel sleepers

Due to environmental reasons Indian Railway switched over to steel sleepers in place of bridge timbers. These steel sleepers are suitably designed for riveted as well as welded girders. Nylon fibre chord reinforced elastomeric rubber pads are provided below these sleepers to provide resilience. As per item no 1037 of BSC-81, Railway Board has ordered, that RDSO shall revised the drawing

of elastromeric pad of uniform thickness of 25 mm and 300 mm wide to be provided below steel sleepers. The pads are required to be suitably grooved and pasted on top of flange plates. While providing these sleepers care is required to ensure alignment and level of the girders. If bridge is located on curve then extra care is needed to ensure proper location of track i.e. eccentricity of sleeper, to satisfy the requirement of versine. Cant may be provided either in the bed block, bearing stool or by pad plate below sleepers; or may be combination of these. RDSO drawing for channel sleeper and H beam sleeper may be referred (Fig. 2.44 as per attached sheet) . Clear spacing between sleepers should not be more than 450 mm. These steel sleepers are galvanized (hot dip galvanizing) and do not need any painting over it.

Relevent RDSO drawings are:

1. Steel channel sleepers

   BA-1636/R2 Steel channel sleeper for BG and MG Steel channel sleeper for bridges BG-MG)

   BA-1636/1/R2 Seating arrangement for steel channel Seating arrangement for rivetted plate girder/stringers

   BA-1636/2 ISMC 175 (BG-MG) 175mm avoid thicker pacing plates on plate girder

   RDSO/B-1636/3 Steel channel sleeper for NG N.G steel channel sleeper

   RDSO/B-1739/R For 30.5 m / 45.7 m underslung girde 30.5m,45.7m underslung bridges s.c.s

   RDSO/B-1745 Steel channel sleeper for BG MG conver Steel channel sleeper for bridges (MG-BG) conversition

   RDSO/B-1636/7 32.5 t DFC loading Steel channel sleeper 32.5t axle load

2. H beam sleepers

   RDSO/B-1636/5 H-beam sleeper for riveted/ welded p Seating arrangement riveted/ welded plate girder stringers & fixing gangway

   RDSO/B-1636/8 H-beam sleepr for welded girders H- beam steel sleeper for welded girder

   RDSO/B-1636/4 H-beam sleeper H-beam sleeper for B.G

2.9.3 General Maintenance of Track on Bridge

Two types of hook bolts are being used. Sloping lip hook bolts are used for rolled sections and straight lipped for built-up girders with flange plates. Hook bolts should be checked for their firm grip. Position of arrows on top of the hook bolts should be at right angles to the rails pointing towards the rail. Hook bolts should be oiled periodically to prevent rusting. To prevent displacement and bunching of sleepers during dragging of the derailed wheels over the girder bridges, an angle tie bar using ISA 75x50x8 mm may be provided on top of sleeper. The angle tie bar shall be fixed using the existing hook bolts. Incase of steel sleepers shank of book bolts are specially designed so that it is round at upper half and rectangular at lower half of its length. Corrosponding round hole and rectangular holes are also provided in steel sleepers as shown at 'Y' in Fig. 2.44. This ensures that lip of hook bolt do not turn away.

Creep should be checked and rails pulled back wherever necessary. Rail-free fastenings should be used on all unballasted deck bridges to avoid transfer of longitudinal forces to the bridge. Rail fastenings should be tight. Preferable position of rail joints on bridge is at one third span; where this is not possible, they should be located as far away from ends and center of the girder as possible so as to reduce the bending moment and shearforce. Defective rails should be replaced. Where switch expansion joints are provided, it should be ensured that free movement of the switch is not hindered.

Guard rails should be provided on all girder bridges which donot have ballasted deck or having open hodc. On all flat top, arch and prestressed concrete girder bridges with deck slab, where guard rails are not provided, the whole width of the bridge between the parapet walls shall be filled with ballast upto the sleeper level. However, it is preferable to provide guard rails from the consideration of arresting the wagon from toppling over the bridge in case of derailment.

Top table of guard rails should not be lower than that of the running rail by more than 25 mm. At the extremities of the guard rail outside the bridge, the guard rails should converge and the end should be bent vertically and buried; and a block of timber fixed at

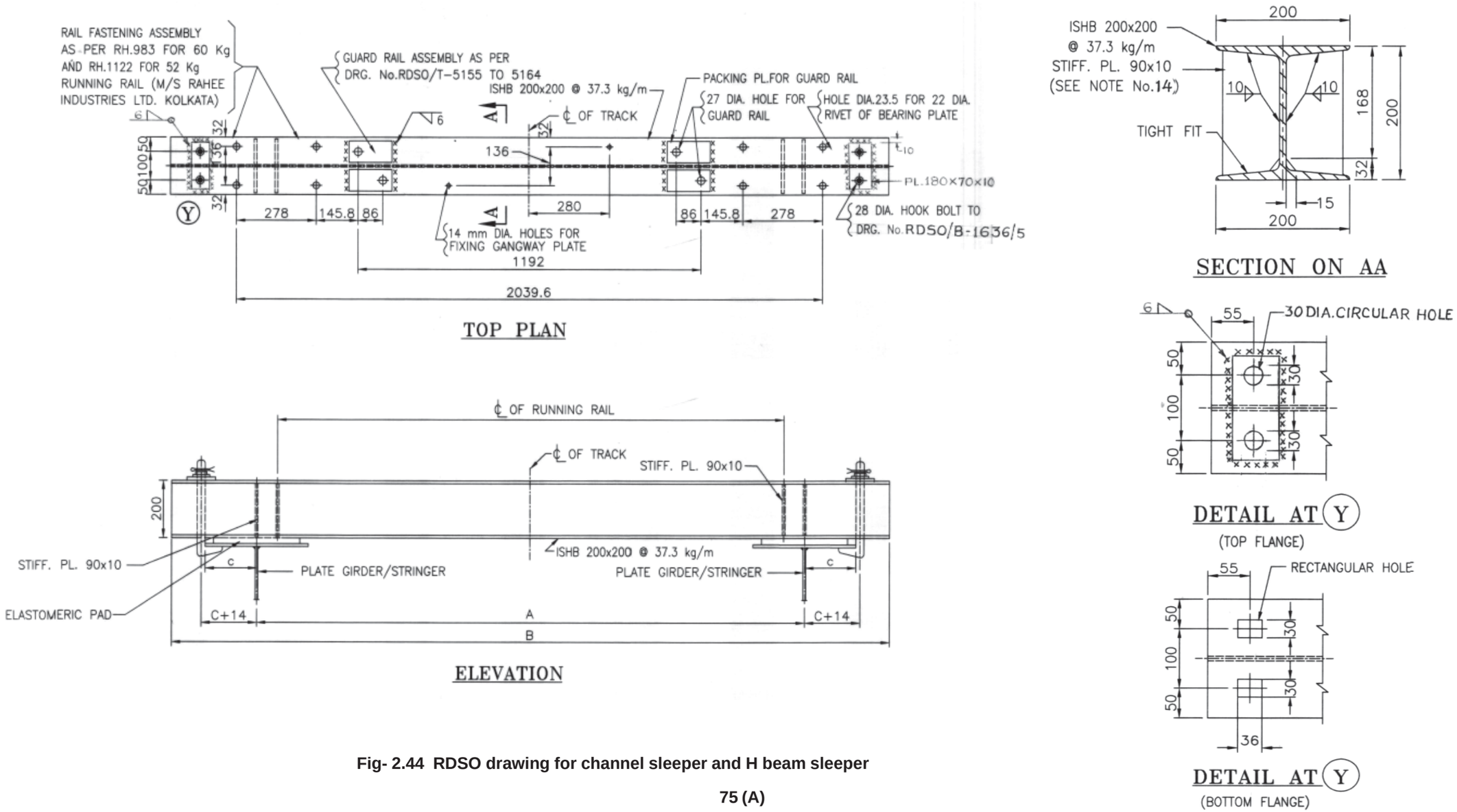

Fig- 2.44 RDSO drawing for channel sleeper and H beam sleeper

the end to prevent entanglement of hanging loose couplings.

To ensure that guard rails are effective, and that bridge timbers do not get bunched up with dragging of derailed wheels over the bridge, they should be systematically to every sleeper with two spikes towards the center of the track and one spike on the out side; notching of the rail foot to accommodate the spikes (fixing the guard rails) should be done on every alternate sleeper. (Fig. 2.45).

Fig. 2.45 Fixing of guard rail

In case of steel sleepers guard rails are better equipped to hold the sleepers in position and therefore requirement of angle appears to be redundant (Fig. 2.45). However, Chief engineer of the railway may decide whether to keep the angle or not.

2.9.4 Continuation of LWR/CWR over bridges on Indian Railways

Recently, during the meeting of HAG level committee held on 3rd and 4th July,2013 at IRICEN/ Pune, the deliberations done earlier by committee were reviewed. The project proposal for taking up the project with UIC Asia's already submitted to Railway Board was also discussed.The committee has made the following recommendations:

2.9.4.1The UIC Leaflet as per UIC 774.3R can be used for continuation of LWR on Ballasted deck bridges up to total length of 110m with following modifications.

1) The longitudinal loads as per actual against 20 KN/m gives in UIC leaflet shall be considered.

2) The value of longitudinal resistance of track should be adopted as: k=25KN/m(For loaded condition).

3) The additional stresses in 60 Kg 90 UTS rails can be provisionally permitted as under

Addl. compressive stress = 60N/mm2 (6.0 Kg/mm2)

Addl. Tensile stress =75N/mm2 (7.5 Kg/mm2)

The allowable permissible Stress shall be proportionately reduced as per cross section area for 52Kg rails.

2.9.4.2 Ballasted Deck Bridges:

Using the rules of succession of spans as given in UIC 776-3R and checking the calculations as per UIC Leaflets with modified values as indicated in Para 3.1 above on straight track,

1) LWR/CWR may be continued over bridges of multiple spans (individual span up to 24.4m)up to total bridge length of 110m.

2) If Elastomeric bearings without any restraint in longitudinal direction are used, LWR/CWR can be continued over bridge of multiple spans (Individual span up to 45.5m) for a total bridge length of 110m.

3) The substructure and bearings shall be checked as per bridge rules together with longitudinal forces obtained as per leaflet.

2.9.4.3 Un-ballasted deck Bridges:

Using the rules laid down in LWR manual Para 4.5.7, on straight track provisionally,

1) LWR on bridges with individual span not exceeding24.4m (45.7m in case of 52 kg rails) and overall length not exceeding 4 spans can be permitted with Rail free fastening with suitable arrangement of Rail creep anchors on trial basis. The SEJ shall be provided minimum 100m away from Bridge abutment.

2) The arrangement of creep anchors shall be as per standard design issued by RDSO.

3) Such bridges provided with LWR will be instrumented for measuring longitudinal force being transferred to bearings/

substructure due to LWR by zonal Railway as per advice of RDSO. Till suitable Rail fracture detection system is developed and provided. LWR to be kept under observation.

2.9.4.4 For 2.9.4.2 and 2.9.4.3above, regular Rail stress monitoring, determination of stress free temperature and installation of rail fracture detection system shall be planned and done to validate the assumptions.

2.9.4.5 The software for Rail/bridge interaction and calculation of stresses shall be procured by RDSO for checking the calculations and further studies. RDSO along with procurement will get their officials and also those from Zonal Railways trained in the use of software, for checking of LWR on bridges as per UIC code. RDSO will act as the nodal center for checking of the bridges and rail stresses as per the software.

2.9.4.6 The detailed study is necessary to allow continuation of LWR on longer bridges and to rationalize the stipulations. The project proposal with UIC Asia was discussed and found in order. Railway Board shall take action to get the project sanctioned early.

2.9.4.7 Un ballasted deck bridges with elastic toe load fastenings :

For un-ballasted deck bridges without rail free fastenings, the fastenings systems being used in the other world railway will have to be studied to identify the fastening system to be adopted by Indian Railways. With such fastening the track will be created and track resistance will have to be measured for calculation of stresses/forces due to LWR on such bridges.

2.9.4.8 For implementation of the above, the instruction held in abeyance as per correction slip No.33 to Bridge Rules, will have to be removed by suitable correction slip by Railway Board.

2.9.5 The recommendations of committee is under consideration with Railway Board.

♦ ♦ ♦

CHAPTER 3

UNDER WATER INSPECTION OF BRIDGES

3.1 Introduction

to ensure safety of bridge. The underwater inspection of bridges is becoming important activity for inspection and maintenance of bridge substructures and foundations. The Indian Railway Bridge Manual (IRBM) specifically provides for under water inspection of all bridges where substructure and foundations are perennially under water.

Underwater inspection is a specialized operation and very expensive and therefore, it necessitates careful consideration of bridges to be selected for inspection.

3.2 Bridge selection criteria

There are many factors, which influence bridge selection criteria. As a minimum, structures must receive routine underwater inspection at intervals not exceeding 5 years. This is the maximum interval at which all under-water elements of a bridge, even if they are in sound condition, must be inspected. More frequent inspections may be necessary for critical structures. Inspection frequency may have to be increased for those bridges where deterioration has been noticed during previous inspections.

Inspection frequency and level of inspection depends on following factors:

- Age
- Type of construction material
- Configuration of the substructure
- Adjacent water features such as dams, dikes or marines
- Susceptibility of stream bed materials to scour
- Maintenance history
- Saltwater environment
- Waterway pollution
- Damage due to water-borne traffic, debris etc.

3.3 Frequency of inspection

Underwater inspection must be carried out on every bridge identified for such underwater inspection as per Indian Railways Bridge Manual provisions. It must also be carried out after any collision with the bridge substructure or after a major storm so that physical evidence is inspected and recorded.

The frequency of inspections are one year for routine/wading inspection, five years for detailed inspection and special inspection as and where considered necessary.

3.4 Methods of underwater inspection

There are three general methods for performing underwater inspection of bridge elements.

1. Wading inspection
2. Scuba diving
3. Surface supplied air diving

3.4.1 Wading inspection

Wading inspection is the basic method of underwater inspection, used on structures over wadable streams. A wading inspection can often be performed by regular bridge inspection teams. A probing rod, sounding rod or line, waders, and possibly a boat can be used for evaluation of a substructure unit.

During wading inspection, one should preferably wear hip boots and chest waders. Boots and waders provide protection from cold and pollutants as well as from underwater objects. In deeper water, wearing of a personal floating device (PFD) may be desirable during wading activities. As a rule of thumb, one should not attempt to wade a stream in which product of depth multiplied by velocity exceeds 3 m2/sec.

3.4.2 Scuba diving

The acronym “Scuba” stands for Self Contained Underwater Breathing Apparatus. In scuba diving, the diver is provided with portable air supply through an oxygen tank, which is strapped to the diver’s back (Fig. 3.1). The diver is connected through an umbilical cable with the surface and has sufficient freedom of movement.

Fig 3.1 Oxygen tank strapped to Scuba diver’s back

Equipments

The minimum equipments required are open circuit scuba, life preserver, weight belt, knife, face mask and swim fins.

Operational considerations

This method is specially suited for making inspection when mobility is prime consideration or many dives of short duration are required. Generally, the maximum sustained time and working depth in scuba diving is one hour at 18 m depth. However, an expert diver can go up to 36 m for short duration of about 10 minutes. One tank holds about 2 m 3 air supplies. As the water depth or the level of exertion increases, the “bottom time” decreases.

Diving team should have at least 3 men because one partner and one stand by diver are required. Moderate to good visibility is necessary for inspection. The areas of coral or jagged rock should be avoided.

Advantages

- Most suitable for short duration dives and shallow depths
- Low-effort dives
- Allows increased diver mobility
- Best in low velocity currents
- Not always necessary to have boat
- Lower operating cost.

Disadvantages

- Depth limitation
- Limited air supply
- Lack of voice communication with surface

Scuba diving with mixed gas

Scuba diving with mixed gas is used for the same situations as normal Scuba diving, but it has the advantage of extending the diving time for a great deal. The disadvantage is that it needs more preparation and equipment than Scuba diving on air.

Scuba with full-face mask and communication

With Scuba diving with a full-face mask it is possible to use

communication. This can be wired or wireless communication. This has many advantages. During all kinds of dive work such as inspections, the diver can report directly to the surface and thesurface engineer can guide or give instructions to the diver. Another advantage is the safety. The full-face mask gives protection against cold or contaminated water. This equipment is, for example, used for thickness measurements of a pipeline or a ship's hull. The diver reports his findings immediately to the supervisor.

3.4.3 Surface supplied air diving

Surface supplied air diving uses a body suit, a hard helmet covering the head and a surface supplied air system (Fig. 3.2). Air is supplied to the diver through umbilical hoses connected to the surface air compressor tank. It requires more equipment than the Scuba diving. In addition to the air hose, a communication cable, a lifeline and a pneumatic fathometer are usually attached to the diver.

Fig. 3.2 Surface supplied air diving

Equipments

Minimum equipments required are diver's mask or Jack Brown mask, wet/dry suit, weight belts, knife, swim fins or shoes and surface umbilical.

Operational consideration

Surface supplied air diving is well suited for waterway inspection with adverse conditions, such as high stream flow velocity up to a maximum of 4 m/s, polluted water and long duration requirements. The general working limits with Jack Brown mask are 60 minutes at about 18 m depth and up to 30 minutes at a depth of 27 m. The work limit for Kirby Morgan mask MK1 without come home bottle is 60 minutes at 18 m; the maximum for MK1 without open bell is 10 minutes at 40 m, and with open bell 60 minutes at 58 m depth.

Advantages

- Long dives or deep water diving (more than 36 m)
- Unlimited air supply
- Back up system available
- Better for low water temperature and high-effort dives
- Safe line attachment to surface
- Better for high velocity currents
- Better in polluted and turbid water.
- Does not require partner diver
- Allows direct communication for audio and video
- Topside depth monitoring is simplified.

Disadvantages

- Large size of operation
- Large boat is necessary
- Large number of equipments, e.g. air compressors, hoses and lines, wet/dry suits etc.

Surface supplied air diving with mixed gas

The use of the surface supplied equipment is same as above. There are advantages using mixed gas. Nitrox will extend dive time in shallow water and Trimix or Heliox will make it possible to dive deeper than 50 meters. However, this service requires extra preparation and more equipment and personnel.

3.5 Method selection criteria

A number of factors influence the proper underwater inspection method. Depth of water alone should not be the sole criteria for determining whether a bridge can be inspected by wading or it requires the use of diving equipment. Some of the factors are:

- Water depth
- Current velocity
- Underwater visibility
- Substructure configuration
- Stream bed condition
- Debris

Where detailed inspections are required to be carried out, surface supplied air diving is more suited as it provides longer time for detailed investigations. Since, in this method, communication is available with the diver, it is possible for an on site engineer to give direction to the diver.

3.6 Diving inspection intensity levels

Three diving inspection intensity levels have evolved. The resources and preparation needed to do the work distinguish the level of inspection. Also the level of inspection determines the type of damage/defect that is detectable. The three levels of inspections are:

Level I : Visual, tactile inspection

Level II : Detailed inspection with partial cleaning

Level III : Highly detailed inspection with non-destructive testing

3.6.1 Level I

Level I is a general visual inspection. The Level I effort can confirm as-built structural plans and detect obvious major damage or deterioration due to over stress, severe corrosion, decay of material due to age, removal of bed sediments, biological growth and attack and external damage etc. This type of inspection does not involve cleaning of any structural element and can, therefore, be conducted much more rapidly than other types of inspections.

Although Level I inspection is referred as a “Swim-by” inspection, it must be detailed enough to detect obvious major damage or deterioration. A Level I inspection is normally conducted over the total (100%) exterior surface of the underwater structure, involving a visual and tactile inspection with limited probing of the substructure and adjacent streambed. The results of the Level I inspection can indicate the need for Level II and Level III inspections and aid in determining the extent and selecting the location of more detailed inspections.

3.6.2 Level II

Level II inspection is a detailed visual inspection where detailed investigations of selected components or sub components or critical areas of structure, directed towards detecting and describing damaged or deteriorated areas that may be hidden by surface fouling, are carried out. This type of inspection will generally involve prior or concurrent cleaning of part of the structural element. Since cleaning is time consuming, it is generally restricted to areas that are critical or which may be typical of the entire structure. The amount and thoroughness of cleaning to be performed are governed by what is necessary to determine the general condition of the overall structure.

A Level II inspection is typically performed on at least 20% of all underwater elements, which should include areas near the low water line, near the mud line, and midway between the low water line and mud line.

On pile structure, 25 cm high bands should be cleaned at designated locations:

- Rectangular Piles - cleaning should include at least 3 sides
- Octagonal Piles - at least 6 sides.
- Round Piles - at least three fourth of the perimeter

On large faced elements, such as piers and abutments, 30 cm by 30 cm area should be cleaned at 3 levels on each face of the structure. Deficient areas should be measured using simple instruments such as callipers and measuring scale and extent and severity of the damage documented.

3.6.3 Level III

This level of inspection is primarily designed to provide data that can be used to perform structural assessment. Level III inspection is highly detailed inspection ofcritical structure or structural element or a member where extensive repair or possible replacement is contemplated. This level of inspection includes extensive cleaning, detailed measurements and selected non-destructive and partially destructive testing techniques such as ultrasonic, sample coring or boring and in-situ hardness testing. Level III inspection will require considerably more experience and training than Level I or Level II inspections and should be accompanied by qualified engineering or testing personnel.

3.7 Inspection tools

A number of inspection tools are available. The dive team should have access to the appropriate tools and equipments as warranted by the type of inspection being conducted. Inspection tools and equipments include:

i) Hand held tools such as flash lights, rulers and tape measures for documenting areas; small or large hammers or pick axes for performing soundings of the structural members; callipers and scales for determining thickness of steel flanges, webs and plates or diameters of piling; and chipping tools for prodding the surface of the concrete to determine the depth of deterioration.

ii) Mechanical devices including a Schmidt Test Hammer for measuring concrete surface hardness, and rotary coring equipment for taking core samples from concrete structures.

iii) Electrical equipment such as Rebar Scanner for scanning of rebars; underwater sonic and ultrasonic equipment for detecting voids in concrete and thickness measurement of steel; Underwater Magnetic Particle Testing to locate and define surface discontinuities in magnetic materials.

3.8 Underwater photography and video equipments

Still photographs and video records facilitate in-depth documentation of underwater inspection. Video systems can provide pictorial representation of existing conditions, transmit visual data to topside personnel for analysis and interpretation, and provide a permanent record of the inspection process. The photography system used in underwater inspection includes still-photography equipment, video recording system, video imaging system and other accessories

3.9 Documentation

Because of efforts in conducting underwater inspections, combined with the time between inspections, it is particularly important to carefully document the findings. On-site recording of all conditions is essential.

Sketches

It is recommended that sketches be used as much as possible; providing enough detail is critical since it is difficult to go back to check items once diving is completed. Drawings should be prepared for the following:

- Elevation showing dimensions and scour, cracks, unstable conditions, etc.
- Sections showing degree of scour, spalling etc at different locations.
- Plans showing inspection areas, inspected sections.
- Sketches showing details of various damages to the structure.

Logs

In addition to sketches, a written log is often kept describing the inspection.

Tape recordings

When significant damage is encountered, a tape recording of the diver's observations can also prove helpful.

Underwater Photographs and Video tapes

When appropriate, damaged areas should be documented with still photography and closed circuit television. Still photography provides the necessary high definition required for detailed analysis, while video, though having a less sharp image, provides a continuous view of events that can be monitored by surface engineers and recorded for later study. All photographs should be numbered, dated and labelled with a brief description of the subject. A slate or other designation indicating the subject should appear in the photograph. When colour photography is used, a colour chart should be attached to the slate to indicate colour distortions. Videotapes should be provided with a title and lead-in, describing what is on the tape.

3.10 Reporting

For each inspection, a report is prepared. The report should include an evaluation of the assessed conditions and recommendations for further action. The report should also provide sufficient technical detail to support the assessment and recommendations.

The report should include the following:

- Identification and description of all major damages and deterioration in the structure, element-wise.
- Estimate of the extent of minor damage and deterioration.
- Assessment of the general physical condition.
- Cause of damage/deterioration if known.
- Water depths at each structural element.
- Recommendations for types of maintenance and repairs required.
- Recommendations for types and frequencies of future underwater inspections.
- Water visibility, tidal range, water current and any other pertinent environmental conditions.

Case study:

North-east Frontier Railway conducted under water inspection of Bridge No.209 on River Sunkosh in Permanent Way section Juri-

Srirampur of APDJ Division during 2007. This bridge is founded on 9.1 meter dia well and constructed in 1993. During under water inspection it was detected that Pier No.4, 5 & 6 (perennially under water) are having cracks, blow holes etc.

Based on under water inspection repair works was carried out. During repair the external surface of crack was sealed using solvent free epoxy based putty Sikagard 694 F(I). This material has excellent property of moisture intensive repair. The deeper crack is filled using high density epoxy based injection risen Sikadur 53 (UF), which cures without shrinkage and its high density ensure water replacement. Further details may be collected from NF Rly.

Fig. 3.3 Digonal crack in well steining

Ref :

1. Revised Guidelines for underwater inspection of bridges was issued by RDSO vide Report No. BS 96 (2008) “Guidelines for Underwater Inspection of Bridges”.
2. IRICEN publication on “Underwater Inspection of Bridges", may be refered for detailed procedure on underwater inspection of bridges.

♦ ♦ ♦

CHAPTER 4

NON DESTRUCTIVE TESTING FOR BRIDGES

4.1 Introduction

The present method of bridge inspection is mostly visual which enables subjective assessment of the condition of the bridge. Moreover, visual inspection system is not capable of assessing hidden defects, if any. For detailed and quantitative assessment of the health of the bridge, non destructive tests (NDT) should be used.

A variety of non destructive methods are available which can be used for estimation of strength and other properties of bridge structures. These methods can be used individually or in combination to assess the various properties of structures.

4.2 NDT tests for concrete bridges

The various NDT methods for assessing the condition of concrete bridges are given below. For detailed procedure of these NDT tests, IRICEN publication on " Non Destructive Testing of Bridges" may be referred.

4.2.1 Rebound hammer (Schmidt Hammer)

This is a simple, handy tool, which can be used to provide a convenient and rapid indication of the compressive strength of concrete. It consists of a spring controlled mass that slides on a plunger within a tubular housing. The schematic diagram showing various parts of a rebound hammer is given as Fig.4.1.

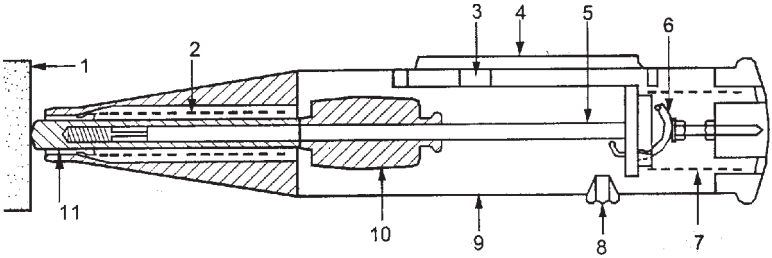

1. Concrete surface; 2. Impact spring; 3. Rider on guide rod; 4. Window and scale; 5. Hammer guide; 6. Release catch; 7. Compressive spring; 8. Locking button; 9. Housing; 10. Hammer mass; 11. Plunger

Fig. 4.1 Components of a Rebound Hammer

The test is based on the principle that the rebound of an elastic mass depends on the hardness of the surface against which mass strikes. When the plunger of rebound hammer is pressed against the surface of the concrete, the spring controlled mass rebounds and the extent of such rebound depends upon the surface hardness of concrete. The surface hardness and therefore the rebound is related to the compressive strength of the concrete. The rebound value is read off along a graduated scale and is designated as the rebound number or rebound index. The compressive strength can be read directly from the graph provided on the body of the hammer. Other types of Rebound Hammer are :

1) Concrete Test Hammer (Pendulum Type):

This is a new type of test hammer. In addition to testing of concrete, this measures the strength of masonry structures as well, although approximately. The equipment is very handy and to the fair extant reliable also. Further more, this is only equipment which is most pre-dominantly used in the field. It's new addition is having so many additional features.

2) Digital Concrete Test Hammer

The digital concrete test hammer is a microprocessor operated standard unit equipped with electronic transducer which converts the rebound of the hammer into electric signal and displays it in the selected stress unit. It has capability of setting of test of the testing angle, selection of units in use (Kg/cm2 , Mpa or Psi). It is battery operated instrument and can be easily connected to a PC and has large memory to store up-to 5000 results.

4.2.2 Ultrasonic pulse velocity tester

Ultrasonic instrument is a handy, battery operated portable instrument used for assessing elastic properties or concrete quality. The apparatus for ultrasonic pulse velocity (UPV) measurement consists of the following equipments (Fig. 4.2).

(a) Electrical pulse generator

(b) Transducer – one pair

(c) Amplifier

(d) Electronic timing device

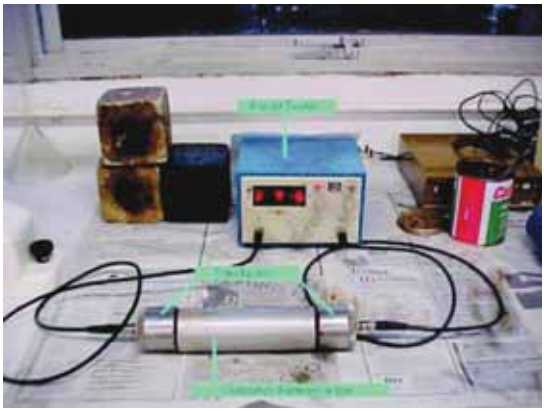

Fig. 4.2 Ultrasonic pulse velocity equipment

The method is based on the principle that the velocity of an ultrasonic pulse through any material depends upon the density, modulus of elasticity and Poisson's ratio of the material. Comparatively higher velocity is obtained when concrete quality is good in terms of density, uniformity, homogeneity etc. The ultrasonic pulse is generated by an electro acoustical transducer. When the pulse is induced into the concrete from a transducer, it undergoes multiple reflections at the boundaries of the different material phases within the concrete. A complex system of stress waves is developed which includes longitudinal (compression), shear (transverse) and surface (Reyleigh) waves. The receiving transducer detects the onset of longitudinal waves, which is the fastest.

For good quality concrete pulse velocity will be higher and for poor quality it will be less. If there is a crack, void or flaw inside the concrete, which comes in the way of transmission of the pulses, the pulse strength is attenuated and it passed around the discontinuity, thereby making the path length longer. Consequently, lower velocities are obtained. The actual pulse velocity obtained depends primarily upon the materials and mix proportions of concrete. Density and modulus of elasticity of aggregate also significantly affect the pulse velocity.

The quality of concrete in terms of uniformity, can be assessed using the guidelines given in the Table 4.1 below.

Table 4.1 Criterion for concrete quality grading (As per IS 13311(Part 1) : 1992)

Sr. No.	**Pulse velocity in km/sec.**	**Concrete quality grading**
1	Above 4.5	Excellent
2	3.5 to 4.5	Good
3	3.0 to 3.5	Medium
4	Below 3.0 Doubtful	

4.2.3 Pull-off test

Pull-off tester is microprocessor based, portable hand operated mechanical unit used for measuring the tensile strength of in-situ concrete. The tensile strength obtained can be correlated with the compressive strength using previously established empirical correlation charts. The apparatus for pull off test consists of 50 mm diameter steel disk and a pull-off tester. One commercially available pull-off tester is shown in Fig. 4.3 below.

Fig. 4.3 Pull-off tester

The pull-off test is based on the concept that the tensile force required to pull a metal disk, together with a layer of concrete, from the surface to which it is attached, is related to compressive strength of concrete. In this test, a steel disk is glued to the surface of the concrete with the help of epoxy resin. A pulling force on the metal disk through a bolt screwed axially to it, is applied and the disk together with a layer of concrete is jacked off. From the recorded tensile force a nominal pull-off tensile strength is calculated on the basis of the disk diameter (usually 50 mm). To convert this pull-off tensile strength into a cube compressive strength, a previously established empirical correlation chart is used.

4.2.4 Pull-out test

The pull-out test measures the force required to pull an embedded metal insert with an enlarged head, from a concrete specimen or a structure. Fig 4.4 illustrates the configuration of a pull-out test.

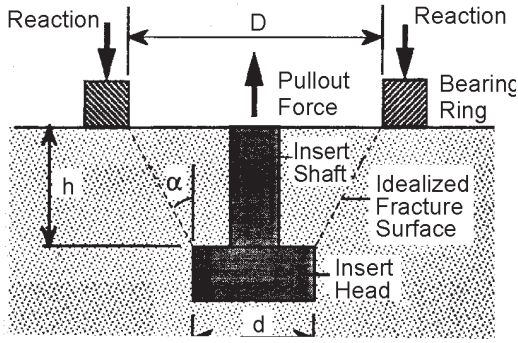

Fig. 4.4 Arrangement for Pull-out test

The test is considered superior to the rebound hammer and the penetration resistance test, because large volume and greater depth of concrete are involved in the test. The pull-out strength is proportional to the compressive strength of concrete. The pull-out strength is of the same order of magnitude as the direct shear strength of concrete and is 10 to 30% of the compressive strength. The pull-out test subjects the concrete to slowly applied load and measures actual strength property of the concrete.

4.2.5 Penetration Resistance Test (Windsor Probe)

The Windsor Probe is basically a hardness tester and provides an excellent means of determining the relative strength of concrete in the same structure or relative strength in different structures. This test is not expected to determine the absolute values of strength of concrete in the structure.

This test estimates the strength of concrete from the depth of penetration by metal rod driven into concrete by a specific amount of energy generated by standard charge of powder. The penetration is inversely proportional to the compressive strength of concrete. In other words, larger the exposed length of the probe, greater the compressive strength of concrete.

In this test, a probe of diameter 6.35 to 7.94 mm and length of about 79.5 mm is used. Probe is threaded into the probe driving

head and fired into the concrete using a template. Exposed length is correlated to the compressive strength of the concrete.

This test can be used for testing compressive strength of concrete and gives strength up to 75 mm below surface. The local damage caused to the member may be repaired. There are requirement of minimum edge distance, probe spacing and member thickness. If the minimum recommended dimension is not complied with, there can be danger of splitting of members.

4.2.6 Rebar locators

These are portable, battery operated equipments used for measuring the depth of cover concrete; location and size of steel reinforcement embedded in the concrete. The equipment consists of data logger, diameter probe, depth probe and calibration block. The equipment works on normal batteries and thus does not require any electric connection. The equipment is available with different commercial names i.e. Pachometer, Profometer, Fe-Depth meter etc. The instrument is based upon measurement of change of an electromagnetic field caused by the steel embedded in the concrete. The reinforcement bar is detected by magnetizing it and inducing a circular eddy current through it. After the end of pulses the eddy current dies away, creating a weaker magnetic field as an echo of the initial pulse. This eddy current echo is measured which gives indication about the depth of the bar, the size of bar and orientation of the bar.

Before conducting core cutting in reinforced concrete, this test is required to be conducted to locate the position of rebars. Proper access is essential for carrying out field measurement. Cover to reinforcement can be measured up to 100 mm with an accuracy of –15% and bar diameter with accuracy of 2 to 3 mm.

4.2.7 Covermeter

The equipment is similar to rebar locator and used for locating reinforcement and estimation of its cover. It consists of a highly permeable U-shape magnetic core on which two coils are mounted. When an alternating current is passed through one of these coils, the current induced in the other coil can be measured.

The cover is measured by placing the probe over the surface of the concrete and dial reading directly gives the cover to the reinforcement depending upon the diameter of the bar.

For locating the reinforcement, the search head is moved slowly from one end to another end in perpendicular direction to main bars. The sound of buzzer/beep will be strongest when the bar will come just above or below the probe, thus the location of main bar is detected.

4.2.8 Half-Cell Potential measurement

This test is useful for monitoring corrosion in the reinforcement. When there is active corrosion, current flow through the concrete between anodic and cathodic sites is accompanied by an electric potential field surrounding the corroding bar. The equi-potential lines intersect the surface of the concrete and the potential at any point can be measured using the half cell potential method. Apparatus for half cell potential measurement is shown in fig. 4.5

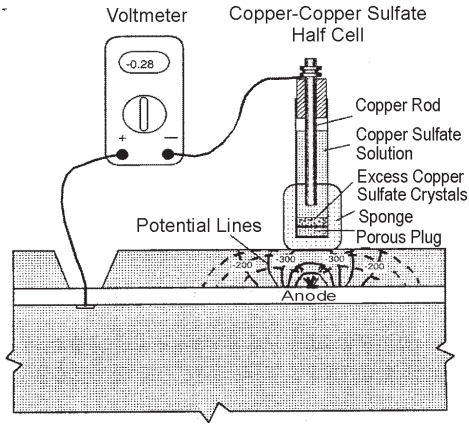

Fig. 4.5 Apparatus for Half-Cell Potential measurement

The apparatus includes copper-copper sulphate half-cell, connecting wires and a high impedance voltmeter. This half-cell is composed of a copper bar immersed in a saturated copper sulphate solution. It is one of the many half cells that can be used as a

reference to measure the electrical potential of embedded bars. A high impedance voltmeter (normally greater than 10 M) is used so that there is very little current through the circuit. The copper-copper sulphate half-cell makes electrical contact with the concrete by means of porous plug and a sponge that is moistened with a wetting solution (such as liquid detergent).

The half cell potential readings are indicative of the probability of corrosion activity of the reinforcing bars located beneath the copper-copper sulphate reference cell. However, this is true only if that reinforcing steel is electrically connected to the bar attached to the voltmeter.

4.2.9 Resistivity test

This instrument (Fig. 4.6) is used to measure the electrical resistance of the cover concrete. This method indicates the likelihood of corrosion of steel and the location where corrosion is likely to occur. The resistivity test combined with Half Cell potentiometer test gives more reliable results about the corrosion condition of the rebar. This is based on the principle that the corrosion of steel in concrete is an electro-chemical process, which generates a flow of current and can dissolve metals. The lower the electrical resistance, more readily the corrosion current flows through the concrete and the greater is the possibility of corrosion.

Fig . 4.6 Resistivity meter

The limits of possible corrosion are related with resistivity as under –

when $p \geq 120\,\Omega - \mathrm{m}$ - Corrosion is unlikely

when $p = 80 \text{ to } 120\,\Omega - \mathrm{m}$ - Corrosion is possible

when $p < 80\ 0\,\Omega - \mathrm{m}$ - Corrosion is fairly certain

Where, (p) is resistivity

4.2.10 Test for carbonation of concrete

Carbonation of concrete in cover results in loss of protection to the steel against corrosion. The depth of carbonation can be measured by spraying the freshly fractured concrete surface with a 0.2% solution of phenolphthalein in ethanol. Since phenolphthalein is a pH indicator, the area with pink colour presents uncarbonated concrete and the remaining (colourless) portion, the carbonated area. The change in colour occurs at around pH 10 of concrete.

The test must be applied only to freshly exposed surfaces, because reaction with atmospheric carbon dioxide starts immediately. Relating carbonation depth to concrete cover is one of the main indicators of corrosion.

4.2.11 Test for chloride content of concrete

The presence of chloride in the concrete is the contributory factor towards corrosion of reinforcement.

Portable equipments are available in the market, which can be used for rapid on site measurement of chloride content of concrete. The chloride content of concrete can also be determined by chemical analysis of concrete in the laboratory.

A rotary percussion drill is used to collect a pulverized sample of concrete and a special acid extracts the chlorides. The amount of acid soluble chloride is determined directly by a chloride sensitive electrode connected to a electrometer.

If different samples are obtained from different concrete depths,

it can be established whether the chloride contamination was there in the original concrete or the same has come from the environment.

4.2.12 Acoustic Emission technique

This method can be used for detection of cracks in concrete as well as steel structures. This method can be helpful in determining the internal structure of the material and to know the structural changes during the process of loading.

Acoustic emission is the sound (both audible and sub-audible), that are generated when a meterial undergoes irreversible changes, such as those due to craking. In general, acoustic emissions are defined as the class phenomena whereby transient elastic waves are generated by the rapid release of energy from localised sources within a material. These waves propagate through the material and their arrival at the surface can be detected by the piezoelectric transducers.

Acoustic emission test may be carried out in the laboratory or in the field. Basically one or more acoustic emission transducers are attached to the specimen. The specimen is then loaded slowly and the resulting acoustic emissions recorded for further processing. The test is generally conducted in two ways.

1. When the specimens are loaded till failure to know about structural changes during loading.
2. When the specimen are loaded to some predetermined level to assess whether the material meets certain design or fabrication criteria.

4.2.13 Endoscopy Technique:

Endoscopy consists of inserting a rigid or flexible viewing tube into holes drilled into concrete bridge components or cable ducts and view them with light provided by optical glass fibers from an external source. This is a most useful method for inspecting or detecting voids in the grout and corrosion in steel in the cable ducts. It is also useful for detail examination of other part of the bridge

structure, which could not other wise be assessed. Endoscopes are available as attachments for a camera or a TV monitor. It, however, needs an experienced engineer to make assessment of most likely locations of voids in the grout and probable points of entry of chlorides into the ducts.

4.2.14 Boroscope:

Tis method can be used for concrete, steel and masonry structures. The method is most commonly used on concrete and masonry structures. A boroscope is used to look inside inaccessible or small voids. For example, if cable ducts are not injected, it is possible to inspect the strands by means of an endoscope through a contact drilling (here a drilled hole from the surface to the cable duct). For steel structures the method is usually used for investigation of closed profiles to gain information regarding the condition of the interior surfaces of the closed profiles.

For masonry structures the boroscope can be used to gain information of the depth of the outer layer of bricks or natural stones and it can provide information of the filling material in between the arches. It may also be used to examine the mortar between bricks or natural stone. The boroscope equipment includes a lighting source and a fibre optic cable to transfer the light to the boroscope. A system of lenses enables the boroscope to be used as a monocular. A camera or video camera can also be mounted on the boroscope for photo documentation. Generally speaking, the method is appropriate and may also be used for inspections of structural components such as expansion joints, honeycombs and cracks/ slots. The many variations and features which can be obtained for boroscopes make them an almost universal tool for internal inspections. These include a wide range of lengths and diameters, solid tubular or flexible bodies, lenses for forward, sideways or retro viewing, still and video camera attachments, and mains or battery power supplies.

4.3 NDT tests for masonry bridges

The various NDT methods for assessing the condition of masonry bridges are given below.

4.3.1 Flat Jack testing

This test is used to determine the compressive strength and in-situ stress of the masonry.

A flat jack is a flexible steel enveloper thin enough to fit within a masonry mortar joint. During testing, the flat jack is hydraulically pressurized and applies stress to the surrounding masonry. The pressure at which the original opening is restored is adjusted by the flat jack calibration constant, which gives the in situ masonry compressive strength.

For deformation testing, two flat jacks are inserted, one directly above the other and separated by five or six courses.

4.3.2 Impact Echo testing

This is a sophisticated version of “sounding” a material which indicates the internal condition of the masonry. The technique involves a hammer striking a masonry surface, with a receiving transducer located near the impact joint. The hammer and receiver are connected to a computer that records the input energy from the hammer and the reflected compression wave energy from the receiver. The response, then can be interpreted to detect flaws within masonry structure. Generally denser the material, higher the wave velocity response.

This technique can be used for determining overall soundness of the masonry.

4.3.3 Impulse Radar

Electro magnetic waves in the band 50 megahertz to 1.5 megahertz are induced into the material by means of a transducer and read by an antenna receiver. In this technique, the receiver reads signal reflected due change in materials, voids or buried objects. Access to both sides of test materials is not required. The method is a very useful tool to get information about internal structure of a masonary structure.

4.3.4 Infrared Thermography

This is also known as heat imagery. The technique involved is that an object having a temp. above absolute zero will radiate electromagnetic waves. Wavelength fall within certain bands, depending on temperature. Wavelengths at room temperature are outside the visible spectrum, while those at very high temperature are shorter and fall within the visible spectrum. Camera or video equipments are used to photograph the surface temperature of the object. The resulting video images indicate surface temperature variations. In masonry construction, the different wavelengths often indicate the presence of moisture. The results indicate whether the masonry is dense/sound or porous/deteriorated.

4.4 NDT tests for steel bridges

4.4.1 Dye Penetrant Inspection or Liquid Penetrant Inspection(LPI)

This method is used to detect surface flaws by bleed out of a coloured or fluorescent dye from the flaw. The technique is based on the ability of a liquid to be drawn into a clean surface breaking flaw by capillary action. After a period of time called the “dwell”, excess surface penentrant is removed and a developer applied. This acts as a blotter and draws the penetrant from the flaw, which indicates the presence and location of the flaw.

The method can detect the cracks/flaws which are open to the surface. Internal cracks/blow holes etc. cannot be detected using this method. Sometimes the very narrow flaws/cracks cannot be detected by visual inspection because of the less size. But using liquid penetrant inspection, even these narrow cracks can be detected. LPI produces a flaw indication that is much larger and easier for the eye to detect. Secondly, the LPI produces a flaw indication with a high level of contrast between the indication and background which makes the detection easier.

4.4.2 Magnetic Particle Inspection (MPI)

Magnetic particle inspection is a NDT method used for defect detection in steel structures. This is a fast and relatively easy method to apply in field. MPI uses magnetic fields and small magnetic particles such as iron fillings to detect flaws in components. The

component being inspected must be made of a ferromagnetic particle such as iron, nickle, cobalt or some of their alloys. Ferromagnetic materials are materials that can be magnetized to a level that will allow the inspection to be effective.

The method may be used effectively for inspection of steel girders and other bridge parts made of steel.

4.4.3 Eddy current testing

This is one of the several NDT methods that use the principal of electromagnetic as the basis for conducting the test. Eddy currents are created through a process called electromagnetic induction. When alternating current is applied to the conductor, such as copper wire, a magnetic field develops in and around the conductor. This magnetic field expands as the alternating current rises to maximum and collapses as the current is reduced to zero. If another electrical conductor is brought into the close proximity to this changing magnetic field, current will be induced in this second conductor. Eddy current induces electrical currents that flow in a circular path. They get their names from “eddies” that are formed when a liquid or gas flows in a circular path around obstacles.

Eddy current equipment can be used for a variety of applications such as detection of cracks (discontinuity), measurement of metal thickness, detection of metal thinning due to corrosion and erosion, determination of coating thickness and the measurement of electrical conductivity and magnetic permeability.

4.4.4 Radiographic testing

This is a technique to obtain a shadow image of a solid using penetrating radiation such as X-rays or gamma rays. These rays are used to produce a shadow image of an object on film. Thus if X-ray or gamma ray source is placed on one side of a specimen and a photographic film on the other side, an image is obtained on the film which is in projection, with no details of depth within the solid. Images recorded on the films are also known as radiographs.

The contrast in a radiograph is due to different degrees of absorption of X-rays in the specimen and depends on variations in specimen thickness, different chemical constituents, non-uniform

densities, flaws, discontinuities or to scattering processes within the specimen.

Some of the other closely related methods are Tomography, Radioscopy, Xerography etc.

4.4.5 Ultrasonic test

This method can be used on almost any solid material that will transmit vibrational sound energy. An ultrasonic transducer changes high frequency pulsating voltage into vibrational energy and when properly coupled to steel with cellulose gum or glycerine, to eliminate air space, most of the sound energy is conducted to the steel for testing.

When coupled to the steel, the transducer is pulsed with high frequency voltage. The sound travels through the steel until an acoustical junction is met, such as the back surface of the steel. From there the sound reflects back to the transducer. The transducer produces a voltage impulse, which is fed back to the ultrasonic test scope where a signal is shown on the cathode ray tube (CRT).

If the metal being inspected has a discontinuity within the path of sound, it will act as an acoustical junction. If some of the sound is reflected back to the transducer, a reflected voltage pulse will appear on the CRT between the front and back surface peaks.

Ultrasonic testing can be used to inspect base metal or welds for inclusions, voids, cracks and laminations. Both surface and sub-surface discontinuities can be detected. Their size, location and orientation can be closely delineated. Access to only side of the work is required.

This test can be used at bridge site for testing welded girders.

♦ ♦ ♦

CHAPTER 5

NUMERICAL RATING SYSTEM

5.1 Introduction

On Indian Railways, bridges are required to be inspected once a year before the monsoon at the inspector level and once a year after the monsoon by Assistant Engineer as per the provisions in Indian Railways Bridge Manual. The condition of various parts of the bridge is recorded by the Assistant Engineer in Bridge Inspection Register in a short narrative manner. The extracts of AEN's remarks concerning repairs/replacement are required to be sent to the inspectors with instructions for compliance. The register is thereafter forwarded to the DEN/ Sr.DEN/CBE for scrutiny and orders. DEN/ SrDEN shall forward registers to Headquarters. All major and important bridges shall be examined by CBE and all the remaining bridges by a SAG officer nominated by PCE. The Bridge Registers are returned to AEN after scrutiny by CBE/Headquarters for compliance. Action taken on the instructions of the officers (AEN onwards) is also to be recorded in the register.

The present system of recording is qualitative and it is not possible to readily identify the relative seriousness of defects or distress in the bridge components. It follows that the need for the extent of repairs/rebuilding/rehabilitation is not readily discernible. The number of bridges on the railways being very large, it is difficult to have an overall picture of the condition of the bridges.

5.2. Relevance of numerical rating system (NRS)

NRS for bridges have been evolved in UK and USA over the last few years. It is essentially a method of examination and assessment which gives, by means of a simple figure code, quick appreciation of the physical condition of the bridge. The system provides a means of recording progressive deterioration. It also provides a way of assessing relative importance of factors which should be taken into account to establish priorities for undertaking repairs/rehabilitation. The system further provides a common yardstick for technical examination not only on one division but on the railway system as a whole. In addition, the system being numeric based, is adaptable to computerization with all the relevant advantages following it.

5.3. Numerical rating system for Indian Railways

1. As per directions of the Railway Board based upon the recommendations of the 66th Bridge Standards Committee, 1990, NRS was introduced on the entire Indian Railway system.
2. NRS is in addition to the existing system of recording in the Bridge Inspection Register. The numerical rating is not in any way linked to load carrying capacity of the bridge.
3. The NRS envisages assigning a numerical rating to the bridge as a whole as also to its components.

Numerical Rating System is explained in the following paragraphs:

5.4. Condition rating number (CRN)

A condition rating number is assigned to each of the bridge components i.e. foundation and flooring, sub-structure, training and protection works, bed blocks, bearings and expansion arrangements, superstructure and track structure.

Values of CRN and brief description of the corresponding conditions are given in Table 5.1.

Table 5.1 Condition Rating Number (CRN)

CRN	Description
1	A condition which warrants rebuilding/rehabilitation Immediately.
2	A condition which requires rebuilding/rehabilitation on a programmed basis.
3	A condition which requires major/special repairs
4	A condition which requires routine maintenance
5	Sound condition
6	Not applicable
0	Not inspected

Some typical cases for assigning CRNs are indicated in Table 5.2 for guidance. However, each case has to be judged and rating decided on its merits by the inspecting officer.

Table 5.2
Guidelines for alloting Condition Rating Number (CRN)

Visible symptom	Possible cause	Suggested rating
a) FOUNDATION AND FLOORING		
i) Foundation		
- Dip in longitudinal level of track	Uniform settlement. settlement with scour	4-3
- Kink in alignment of track over a pier/abutment	Differential settlement scour	4-2 3-1
ii) Flooring		
- Flooring damaged or washed away	Leaching of mortar and/or scour	4-2

Table 5.2 contd.....

Visible symptom	Possible cause	Suggested rating
b) MASONRY/CONCRETE IN SUBSTRUCTURE		
i) Pier/abutment/ retaining walls/ wing walls etc.		
- Loss of Leaching of material	jointing mortar (in masonry)	4-3
- Hollow sound on tapping	-do-	4-3
- Deterioration of surface, surface cracks	Weathering spalling,	4-3
- Lateral tilt Differential	settlement	3-2
- Vertical cracks	Differential settlement, scour	3-1
- Longitudinal tilt (in the direction of track) or bulge	Inadequate section scour/inadequate design/weep holes not functioning	3-1
- Weep holes not functioning and no tilt or bulge	Poor filter & backfill	4
- Map pattern (surface) cracks in concrete, not progressive	Shrinkage of concrete	5-4
- Deep & progressive cracks (in concrete)	Weathering/bad construction joints	4-3
- Longitudinal tilt	Scour/Inadequate section	3-2

Table 5.2 contd.....

Visible symptom	Possible cause	Suggested rating
- Horizontal cracks	Inadequate section	3-2
ii) Ballast Wall		
- Tilt/cracks (no distress in main abutment)	Inadequate section (of ballast wall)	4
- Reduction gap at the end of girder	of Shear failure (sliding)of abutment /scour movement of girder	3-2 4
c) TRAINING AND PROTECTION WORKS		
- Pitching damaged or washed away	Flood	4-1
- Toe wall damaged or washed away	Flood	4-2
- Apron damaged or washed away	Flood	4-2
- Earth work section of guide bund/spur reduced	Flood/trespassing	4-2
d) BED BLOCKS		
- Crushing of bed block under bedplates	Failure of bed block	3-1
- Cracked bed block	Failure of bed block	4-2
- Cracks in masonry below bed block	Crushing of masonry	4-2
- Loose/shaken bed-block	Excessive vibration/ improper pointing work	4-3

Table 5.2 contd.....

Visible symptom	Possible cause	Suggested rating
e) BEARING OF GIRDERS		
i) Sliding bearing		
- Corroded but not seized	Cleaning & greasing not done	4
- Corroded and	Cleaning & seized greasing not done	3
- Irregular gaps between bearing strip and location strips	Movement of girders	4
- Sheared location strips and/or Sheared anchor bolts	Excessive movement of girder/sliding or tilting of substructure	3-2
- Impact at bearing (floating)	Incorrect levels of bed block	3
ii) Roller & Rocker Bearing		
- Corroded but not seized	Cleaning & greasing not done	4
- Corroded and seized	Cleaning & greasing not done	3
- Flattening of rollers (ovality)/ cracking	Failure	3-2
- Impact at bearing (floating)	Incorrect levels of bed block	3
iii) Elastomeric Bearings		
- Tearing/cracking/ bulging	Inferior quality material, weathering	4-1

Table 5.2 contd.....

Visible symptom	Possible cause	Suggested rating
iv) All bearings		
- Displacement	Settlement/scour under pier	4-2
f) SUPERSTRUCTURE		
i) Arch		
- Visible distortion in profile (shown by disturbed longitudinal of parapet)	Inadequate thickness of arch ring levels	3-1
- Dislocation of arch stones	Inadequate thickness or bricks of arch ring	3-1
- Longitudinal cracks (no cracks in pier)	Excessive lateral thrust on spandrel walls/differential behaviour of arch ring/ inadequate cushion.	3-2
- Transverse cracks	Overloading on arch causing tension in intrados.	3-1
- Diagonal cracks	Overloading on arch causing tension in intrados.	3-1
- Separation of ring at extrados	Distortion/shortening of arch ring	4-2
ii) Plate girders		
- Early steel	Material	2
- Weathered paint surface	Weathering	4
- Flaking/peeling of steel	Corrosion	4-2
- Distortion of bracings	Accidents/ inadequate section	4-2

Table 5.2 contd.....

Visible symptom	Possible cause	Suggested rating
- Distortion of stiffeners	Overload	3-1
- Loose rivets at floor system joints	Overload/bad quality of rivetting	4-2
iii) Open Web Girders		
- Early steel	Material	2
- Weathered paint surface	Weathering	4
- Flaking and peeling of	Corrosion steel	4-2
- Distortion of bracings	Accident/inadequate section	4-2
- Distortion of stiffeners	Overload	3-1
- Loose (field) rivets at floor system	Overload/bad joints riveting	4-2
- Loose (field) rivets at main chord joints	Overload/bad riveting	4-2
- Progressive loss of camber (needs to be reliably established)	Overload/bad riveting	3-1
iv) Pipes		
- distortion of section/Cracks	Inadequate design/ weathering	4-2
- Sag	Failure of pipe/ settlement	4-2
v) RCC/PSC Slabs		
- Map pattern surface cracks (not progressive)	Shrinkage of concrete	5-4

Table 5.2 contd.....

Visible symptom	Possible cause	Suggested rating
- Longitudinal cracks	Weathering/bad construction joints	4-3
- Transverse cracks	Inadequate design/ corrosion of reinforcement	3-2
- Sag	-do-	
vi) RCC/PSC Girders		
- Cracks in anchorage zone of PSC girders	Inadequate design/ defective construction	3-1
- Rust streaks along the reinforcement/tendons	Corrosion	3-2
- Spalling/crushing of concrete	Construction defect/weathering	3-1
- Diagonal shear cracks in web	Inadequate design/ corrosion	3-1
- Flexual cracks, cracks at junction of precast beam and in-situ slab	Inadequate design/ construction defect/weathering	3-1
- Cracks in diaphragm	Design deficiencies/ weathering/ construction defect	4-2

5.5 Overall rating number (ORN)

ORN for the bridge as a whole is also to be given which is the lowest rating number, except zero, alloted to any of the bridge components.

5.6 Major bridges

1. The physical condition of each major bridge is to be represented by a Unique Rating Number (URN) consisting of eight digits, where the first digit represents the ORN and each of the subsequent digits represents the CRN of the different bridge components in the following sequence:

a) Foundation and flooring

b) Masonry/concrete in substructure

c) Training and protection works

d) Bed blocks

e) Bearings and expansion arrangements

f) Superstructure – girder/arch/pipe/slab etc.

g) Track structure

2. CRN of a bridge component shall be the lowest rating number applicable to the worst element of that component. For example, if a bridge has 5 piers and 2 abutments which, on physical condition basis, would require rating of 5,4,3,2,5,5,4, then the CRN to be recorded for the substructure component shall be the minimum of the above i.e. 2.

3. If in any bridge, one or more components (say, training and protection works) do not exist, the CRN for this component will be 6.

For example, URN 20362544 indicates the following:

Digit	Number Value	Indication
1	2	Whole bridge or one or more of its (ORN) components require rebuilding/rehabilitation on programmed basis.
2	0	Foundation and flooring were not inspected.
3	3	Substructure requires major/special repairs.
4	6	Not applicable i.e. the bridge does not have any training or protection works.
5	2	Bed blocks are cracked and shaking
6	5	Bearings and expansion arrangements are in sound condition.
7	4	Superstructure requires routine maintenance.
8	4	Track requires routine maintenance.

5.7 Minor bridges

Physical condition of minor bridge is to be represented by only one digit ORN to indicate the overall condition of the bridge. This is because in the bridge inspection registers for minor bridges used by most of the Railways, separate columns are not available for recording the condition of the various bridge components.

5.8 Road over bridges

The physical condition of a road over bridge is to be represented similar to a rail bridge.

5.9 Recording in bridge inspection register

1. During the annual bridge inspection, the condition of different components of the bridge should be recorded by the AEN in the bridge inspection register, as hitherto being done. In addition, the AEN should also record the rating numbers in the relevant columns of the bridge components. He should also record ORN and URN as applicable.
2. Bridges, which are rated with CRN of 3 or less should be specifically included among the bridges referred by AEN to Sectional DEN/Sr.DEN as these are actually/ potentially distressed bridges. The Sectional DEN/Sr.DEN should inspect all these bridges and revise/confirm the rating given by the Sectional AEN. All the bridges which are rated with ORN 1 or 2 should be placed in the distressed category I and II respectively.
3. Bridge components which have CRN as 0 should be inspected by AEN at the earliest so that the uninspected components are inspected.

♦ ♦ ♦

CHAPTER 6

MAINTENANCE OF BRIDGES

6.1 Introduction

Bridges represent a considerable capital asset not only because of the heavy investment required in constructing or replacing them but also because some of them form part of the historic and cultural heritage of a country. None of the bridges is endowed with an eternal life. Lack of maintenance generally results in reduced life and deterioration in the bridge structure. The adage “Prevention is better than cure” and “A stitch in time saves nine” are eminently true for bridges, where defects can rapidly lead to serious consequences if action is not taken in time. Demands made on bridges as also problems in attending to them have increased over the years. Therefore, it is essential to prolong the life of structures and rehabilitate them wherever necessary and possible.

In the olden days, bridge substructures were constructed in brick or stone masonry in lime mortar. Over the years the lime mortar in the joints becomes weak and cracks develop in the masonry. There are cases where there has been weathering action on stones or bricks which were possibly not of a good quality. The distress can also be on account of weakness in any part of the structure i.e. foundations, substructure or superstructure. It can also be because of inadequate waterway or inadequate cushion.

6.2 Symptoms and remedial measures

Some of the common symptoms and remedial measures thereof are listed below:

Nature of the Problem	Remedial Measures
a) Foundation	
i) Settlement:	
Moderate	- Packing under superstructure
Severe	- Stabilize by piles around foundation - Do micro pilling or root piling or rebuild
ii) Scour:	
Moderate	- Protect by flooring - Dump boulders around piers in scoured portion.
Severe	- Protect by piles around the foundation.
b) Substructure	
i) Weathering of masonry :	
Joints - Superficial	- Pointing
Deep	- Grouting with cement or epoxy - Plaster the masonry
Leaching of lime mortar	- Cement grouting
Leaching of masonry	- Guniting
ii) Vertical cracks	- Grouting with cement or epoxy - Jacketing
iii) Horizontal cracks	- Increase the section by jacketing
iv) Leaning/bulging	- Backfill drain - Weep holes - Soil Anchoring/rock anchoring - Jacketing - Rebuilding

Nature of the Problem	Remedial Measures
v) Hollow left in masonry due to defective workmanship	- Cement grouting
vi) Reduction of gap at end of girder.	- Check the bearing - Pull back the girder after checking the verticality of piers.
c) Training and Protection Works	
i) Damaged pitching	- Repair with stone and point them.
ii) Toe wall damaged	- Rebuild them
iii) Damaged apron or washed away	- Repair or rebuild them
iv) Reduction in section of guide bund/spur etc.	- Repair before monsoon
v) Railway affecting tanks	- Inspect before monsoon and repair them in coordination with irrigation authorities.
d) Bed Blocks	
i) Crushing of bed blocks under bed plates	- Repair them with epoxy mortar after removing all loose material
ii) Shaken/loose bed blocks	- Pointing around the bed blocks - Epoxy grouting - Provide through bed blocks
iii) Cracked bed block	- Recast bed blocks either cast-in-situ or precast
iv) Cracks in masonry below bed block	- Repair the crushed masonry with epoxy mortar, if necessary.
e) Bearings	
i) Corroded but not seized	- Clean and Grease it

Nature of the Problem	Remedial Measures
ii) Corroded and seized	- Replace it
iii) Shearing of strips, anchor bolts	- Check the movement of girder. - Strengthen the approaches. - Repair the sheared parts.
iv) Impact at bearing	- Check the levels of bed blocks. - Provide a layer of epoxy mortar in the gaps.
v) Flattening of rollers or cracked rollers	- Replace the rollers
vi) Tearing/cracking/ bulging of elastomeric Bearings	- Replace the bearing with good quality bearing.

f) Superstructure

1. Arches

i) Weathering	- Pointing - Grouting with cement or epoxy - Guniting
ii) Visible distortion	- Jacketing intrados or extrados in profile
iii) Cracks in arch	- Grouting with cement or epoxy. - Jacketing intrados or extrados
iv) Cracks/bulges in parapet/spandrel wall	- Draining the back fill - Providing Ties - Rebuilding

2. Steel Girders (Riveted and welded)
Plate Girder / Open Web Grider

i) Early steel	- Replace the girder - Check with reduced stresses
ii) Weathered paint surface	- Painting

Nature of the Problem	Remedial Measures
iii) Flaking & peeling of steel	- Provide cover plates
iv) Distortion of bracings	- Change the bracings. Also check for its adequacy.
v) Distortion of stiffeners	- May be due to over load. - Redesign and provide a heavier section
vi) Loose rivets at floor system joint	- Replace the rivets. - HSFG bolts can not be used to replace isolated loose rivets.
vii) Cracks in steel works	a. Whenever a crack is detecte in the steel work, its cause should be established and further propagation, if any, monitored. If the crack is propagating in a direction perpendicular to the stress in member, holes 20 or 22 mm dia may be drilled at crack ends to arrest the crack propagation. The edge of holes should be placed at visible ends of the crack. After holes are drilled it should be checked that crack tips have been removed and turned bolts of 20 or 22 mm dia as the case may be should be provided in the holes and fully tightened. Any reduction in strength of girder due to the crack and drill of holes should be given due consideration. b. The method of repair of crack should be decided based on the location and severity of the crack.

Nature of the Problem	Remedial Measures
	As a long term solution the cracked member may be strengthened by cover plate (s), adequately rivetted. If this is not feasible, the defective member may have to be taken out and repaired/replaced.
	c. Permanent measures may consist of the cracked member being retrofitted with rivetted or bolted splice or where feasible the entire member may be replaced.
	d. Field welding should not be undertaken for repair of cracks.
viii) Rust mark over metalized surface Possibility of crack/ loose rivet at joint	- same as above (vii)
ix) Progressive loss of camber	- May be due to overload or bad riveting. Check for stresses and strengthen it. - Regirder the bridge - Lift the panel joints and re-rivet the girder joints.
3. Pipes	
i) Distortion of section/cracks	- Change the pipe by rebuilding
ii) Sag	- Strengthen sagged portion.

Nature of the Problem	Remedial Measures
4. RC/PSC Slabs	
i) Map pattern surface cracks (not progressive)	- Keep under observation
ii) Structural cracks	- Grouting with epoxy
iii) Spalling of concrete	- Guniting
iv) Sag under train load	- Replace the slab.
5. RC/PSC Girders	
i) Cracks in anchorage zone	- Epoxy grouting - Replace the girder.
ii) Spalling/crushing	- Guniting
iii) Shear cracks, Flexural cracks	- Epoxy grouting.
6. Composite girders	
i) Seperation of the concrete or Crack in Concrete Slab	a. If separation of the concrete deck slab from the steel girder is noticed, the location and length should be marked distinctly with paint for easy identification. Repair and retrofit scheme should be prepared after fully investigating the cause of the problem. Epoxy grouting may be done to bind the deck slab and the girder where the defect is noticed and the girder should be kept under close observation.

Nature of the Problem	Remedial Measures
	If the epoxy grouting is not found effective, vertical prestressing or strapping may be necessary for which holes should be drilled in the deck slab near the girder in the affected location and vertical prestressing/ strapping provided. b. The drainage system of the deck slab should be thoroughly cleaned and repaired as necessary before the on set of monsoon. c. Wearing coat where provided, should be maintained.
ii) Defects in steel portion	- Similar action as mentioned under heading of steel girders.
iii) Loose/broken HSFG bolts	- These bolts shall be replaced expeditiously by new HSFG bolts of same specifications & properly tightened. Retightening of loos HSFG bolts is not allowed in any case. - HSFG bolts cannot be used for replacement of isolated loose rivets. - The bolt threads may be destroyed to prevent theft / sabotage.

♦ ♦ ♦

CHAPTER 7

REPAIRS TO CONCRETE AND MASONRY BRIDGES

7.1 Introduction

The Important defect in masonry and concrete structures, which require repairs are:

a) Hollowness of the structure

b) Honeycombed concrete

c) Cracks

d) Disintegration of material

e) Loose joints due to leaching etc.

Cement pressure grouting and epoxy injection can be adopted for repairing deficiencies a, b and c above. For repairing the disintegrated masonry concrete or spalled concrete, guniting is normally done. Loose joints around bed blocks in stone or brick masonry can be repaired either by epoxy grouting or cement grouting.

Before attempting repair of any crack, a full investigation should be made to determine the cause of the crack and remedial action taken. Cracks may be separated into two classes for the purposes of deciding upon the type of repair.

i) Dormant cracks which are not likely to open, close or extend further. These are also called ‘dead’ cracks.

ii) Live cracks which may be subjected to further movement. If repairs do not have to be carried out immediately, observation over a period of time will enable cracks to be classified and will assist diagnosis of the cause.

In reinforced and prestressed concrete structures, the cracks may also occur due to degradation of concrete, corrosion of reinforcement and structures’ mechanical behaviour.

7.2 Cement pressure grouting of masonry structures

7.2.1 Equipments

1. Air compressor with a capacity of 3 to 4 cum per minute and pressure of 2 to 4 kg per sq.cm.
2. Grout injecting machine which has inlet and outlet valves, pressure gauge and an air-tight pressure chamber into which grout is introduced.
3. Flexible hose pipe conforming to IS:5137 for transmitting grout from pressure chamber to ports embedded in the masonry (Fig. 7.1).
4. Drilling equipment, pneumatic or electric for drilling holes upto 25 mm dia.

7.2.2 Procedure

1. 25 mm dia holes are drilled to a depth of 200 mm in a staggered manner in the area in which pressure grouting is to be done, particularly along cracks and hollow joints.
2. G.I. pipes 12 to 20 mm dia and 200 mm long with a threaded end are inserted and fixed with rich cement mortar.
3. Any crack and annular space around the G.I. pipes are sealed with rich cement mortar. All the cracks are cut open to a ‘V’ shaped groove, cleaned and sealed.
4. Grout holes should be sluiced with water one day before grouting so as to saturate the masonry.

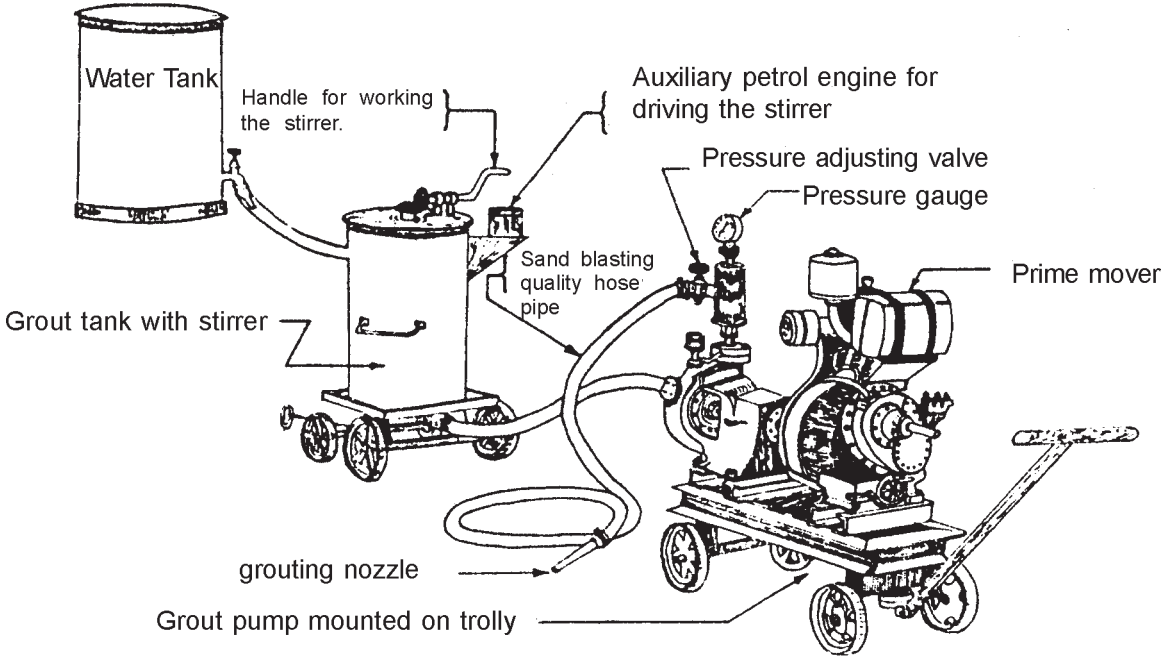

Fig. 7.1 Detail of pressure grouting machine

Sluicing is circulation and filling of water. This is carried out by using the same equipment as for grouting. All holes are plugged with wooden plugs. Bottom most plugs in holes 1, 2 and 9 (Fig. 7.2) are removed. Water is injected in hole 1 under pressure. When the water comes out through holes 2 and 9, injection of water is stopped. Plugs in holes 1 and 9 are restored. The process is repeated in all the holes. After 24 hours all plugs are removed to drain out excess water. The plugs are restored after draining.

5. Cement grouting with water-cement ratio of 0.4 to 0.5 is done from bottom to top and left to right using grout injecting machine. The cement grout should be completely used within 15 minutes of mixing.

   The procedure for grouting is similar to sluicing in terms of removal and refixing of plugs and sequence of operation. The recommended proportion may be altered if admixtures are used to attain flowability of the grout. In case admixtures are used, manufacturer's specifications should be adopted for grout proportioning.

   Curing with water is to be done for 14 days over the grouted portion.

6. Effective grouting is achieved with the help of hand grouting machine if the holes are provided in every 3rd layer of masonry or at intervals of 1.2 to 1.5 meters in staggered position.

7. The grouting machine must be properly cleaned immediately after use.

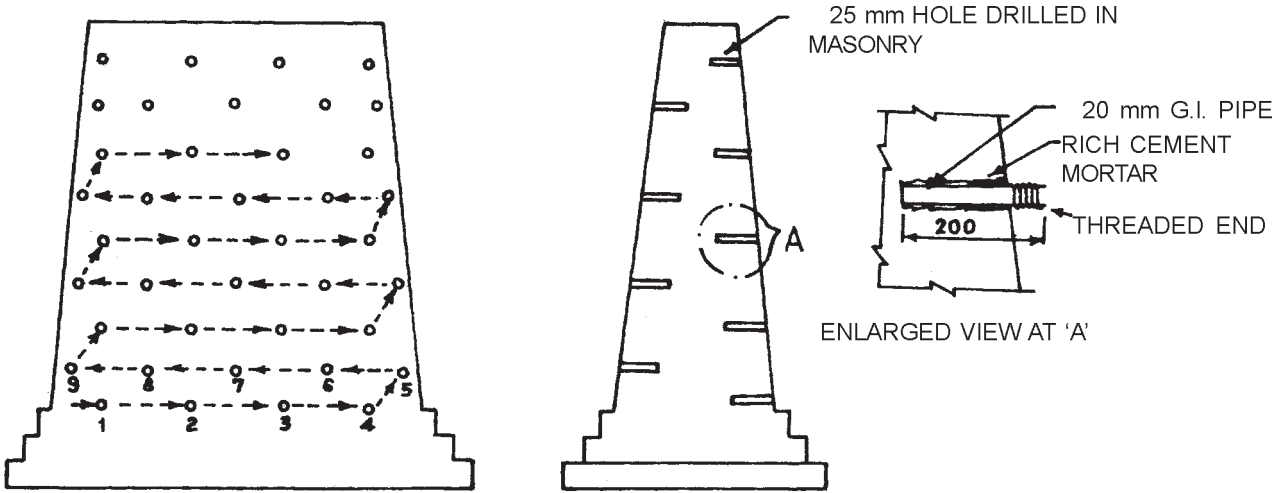

Fig. 7.2 Cement pressure grouting

7.3 Epoxy resin grouting of masonry structures

7.3.1 General

The structures built of stone masonry, brick masonry or concrete get affected by prolonged weathering action. The ingress of moisture sometimes associated with the extraneous chemicals such as nitrates, chlorides and sulphates combined with either proximity of sea or aggressive ground soil conditions accelerate the deterioration of the structures. Stone masonry built with inferior stones such as sand stones, laterite, etc. is prone to spalling by ingress of moisture. Brick masonry built with porous bricks is subjected to similar action. Leaching of cement and lime on account of poor drainage and consequential deterioration of strength also takes place.

It is a known fact that adhesion between the old damaged masonry or concrete and newly-laid masonry or concrete is poor. Besides this, the cement does not get enough time for setting and hardening before traffic is allowed over the newly repaired structures. This also leads to frequent repairs at the same spot.

Epoxy resins have the following advantages over cement as a bonding medium.

1. Quick setting
2. Low viscosity to fill up hair cracks
3. Low shrinkage
4. High adhesion to any material
5. Stable at all temperatures.

Epoxy resins consist of condensation products of Epichlorohydrin and Bisphenol-A. They are thermosetting with high adhesive strength and practically no shrinkage with good resistance to wear and to most of the chemicals. The resin and hardener have to be mixed for starting the chemical reaction of hardening. The pot life of the mixture varies between 30 minutes and 2 hours depending on the ambient temperature and the type of hardener. For preparing mortars, silica flour is added. It is important to follow the manufacturer's recommendations for the best application procedure, temperatures and pot life. For mixing epoxy components, the use of polythene vessels is recommended.

7.3.2 Procedure

The surface over which epoxy is to be applied must be strong and sound as well as dry and clean. It should be free from oil, grease, loose materials, laitance, dust and debris. If necessary, compressed air can be used to remove the loose materials from the surface.

Low viscosity resins may be adopted for thin cracks. In case of vertical crack, the injection of resin should be done from bottom to the top to ensure complete filling.

A “V” groove about 10 mm deep is made all along the crack by mechanical or manual means. All loose fragments of concrete are removed by using a jet of air. Nails are driven into the cracks at 15 to 30 cm interval. Holes of 7-10 mm dia should be drilled along the cracks and copper, aluminum or polythene pipe pieces 40 to 50 mm long and 6 to 9 mm dia are inserted around the nails and allowed to rest on them. All the cracks along the groove are now sealed with epoxy putty. The tubes furnish an unobstructed passage for the epoxy resin into the crack and also forms an outlet for the entrapped air (Fig. 7.3).

Epoxy of suitable formulation is injected from the bottom most pipe, keeping all other pipes, except the adjacent one, blocked by wooden plugs. The injection is done using suitable nozzles connected to air compressor or by modified grease guns or hand operated guns. Pressure of 3.5 to 7 kg per sq.cm is normally used. As soon as the epoxy comes out from the adjacent open pipe, it is plugged and the pressure increased to the desired level and maintained for 2 to 3 minutes. The injection nozzle is then withdrawn and the hole sealed with epoxy mortar. This operation is continued for the other pipes also. Any resin that remains or overflows the copper pipe is scraped off with a metal spatula and the surface cleaned with a rag soaked in non-inflammable solvent. For this purpose, it is recommended that persons who work with epoxy wear rubber gloves. The grease gun or syringe should be washed with acetone immediately after the completion of the work.

In the case of a network of fine cracks, which do not endanger the stability of the structure, it may be sufficient to apply a coating (300 to 400 micron thick) of a solvent-free epoxy system. Wider

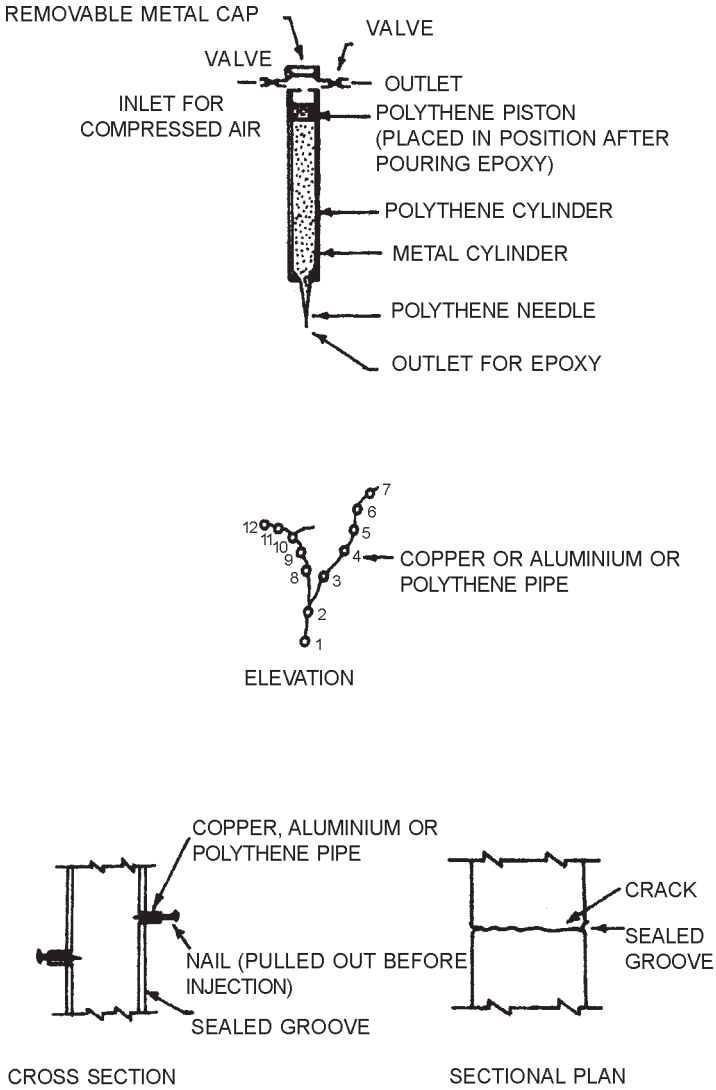

FIG. 7.3 EPOXY GROUTING

cracks which do not endanger the concrete structure can be filled atleast partially with epoxy putty (epoxy, hardener and china clay).

Since epoxy is a costly material, its use should be restricted to areas where dynamic forces are transmitted (e.g. areas below and around the bed blocks, cracks in PSC/RCC slabs or girders etc.).

7.4 Repair of cracks in reinforced concrete and prestressed concrete girders and slabs

7.4.1 General

In reinforced concrete, cracks wider than 0.3 to 0.4 mm should be sealed and filled with injection. A crack resulting from a rare load-application can be repaired (if it is wider than 0.3 to 0.4 mm) by pressure injection with a suitable epoxy formulation so that the integrity is restored. Dormant cracks in excess of about 0.4 mm width, must be cleaned and then filled and sealed with epoxy injection for widths upto about 2 to 3 mm, and with fine cement grout for wider cracks.

7.4.2 Materials used for filling the cracks

The material used for crack injection must be such as to penetrate easily into the crack and provide durable adhesion between the cracked surfaces. Currently, the following fluid resins are used for crack injection (together with hardeners):

i) Epoxy resin (EP)

ii) Polyurethane resin (PUR)

iii) Acrylic resin

iv) Unsaturated polyester resin (UP)

The formulations of commercially available injection resins vary widely in their properties, and care must be exercised in making proper selection. Important properties of any injection resin are its resistance to moisture penetration and alkaline attack from the cement. Where tensile strength is a requirement, the tensile strength of the resin should approach that of the concrete as closely as possible. Therefore, a stiff and highly adhesive resin is desirable. These properties are available in epoxy or unsaturated polyester

resins. After hardening of the injection material, the ‘stiffness’ of crack will depend upon the elasticity of the resin.

The polyurethane or acrylic resin is recommended where moisture resistance is a requirement. Some epoxy based low-viscous resin will penetrate to the crack-root even when the crack width at the surface is only about 0.2 mm. Comparable results can be obtained from unsaturated polyester and polyurethane resins. Acrylic resins are capable of sealing fine cracks because of their low viscosity. However, in all cases, this requirement can only be fulfilled with an appropriately long ‘reaction time’. Fast reactive systems will only close the crack at its surface, which may not be desirable.

Although cement paste is relatively inexpensive, its use is limited to crack widths of approximately 2 mm or more because of its limited viscosity. Cement glues and mortars are of importance in such applications as injection of voids, hollows, cavities, honeycombing, and sealing of ducts, etc. For these applications the use of appropriate additives is recommended to reduce viscosity, shrinkage and the tendency for settlement. Improvement of workability will be obtained if the cement suspension is formed by using high speed mixers.

The following table gives general idea about selection of materials for repair of cracks.

Table 7.1 Selection of materials for repair of cracks

Type of Crack	Width (mm)	Type of material	Mode of application and/or principle
Shrinkage cracks	<0.2	Two component epoxy injection	Surface treatment which works through capillary action
Structural cracks	0.2-1.0	Two component epoxy injection	Low pressure treatment which works through capillary action

Type of Crack	Width (mm)	Type of material	Mode of application and/or principle
	1.0-2.0	Two component epoxy injection and solvent free epoxy	Low pressure injection
	2.0-5.0	Solvent free epoxy thixotropic	Low pressure injection with hand pump
	5.0-15.0	Polymer modified cement based grout	Grout with injection by gravity or hand pump
	>15.0	Non shrink grout	Cut and fill non-shrink grout

7.4.3 Crack injection steps

As a rule, the following steps are necessary for injection:

i) Thoroughly cleaning the cracks with high pressure clean air.

ii) Drilling the injection holes and blowing-clean the holes and cracks. Space the ports at the desired depth of penetration since the resin generally travels as far into the crack as along the face of the crack. If the cracks are less than 0.2 mm wide, entry ports should not be spaced more than 150 mm apart. If the cracks are more than 600 mm in depth, intermediate ports should be inserted. Port spacing in cracks extending the full depth of the member are given in Table 7.2.

Table 7.2 Spacing of Ports

Thickness of member (m)	Ports on one side or all sides	Spacing of ports
0.3 & less	One side	Thickness of member.
0.3 – 0.6	All available sides	Not greater than thickness of member.
Greater than 0.6	All available sides	Thickness of member with immediate ports.

iii) Fixing of flanged injection nipples along the cracks. A ‘V’ groove may be cut near the ports for facilitating proper fixing of the nipples.

iv) Covering the crack surface between nipples by a thixotropic liquid sealent.

v) Mixing the injection material.

vi) Injecting the injection material through the nipples against gravity (unless the crack is horizontal), in a progressive serial order, and

vii) Re-injection and testing, if required or found necessary.

7.4.4 Injection equipment and injection process (Fig. 7.4 a & b)

Different injection equipments are available, depending on whether the materials are premixed or used separately. In the case of 'premixed components' equipment, the resin and hardener are mixed first and subsequently injected into the crack using this equipment. Typical ‘premixed components’ equipment consists of:

i) A hand grease gun

ii) An air pressure tank

iii) A high pressure tank

iv) A hose-pump

With these equipments, rather high pressures can be applied. The pot life of the mixture is an important parameter in the application by such equipments.

Therefore, the length of the crack that can be injected in one go is subject to the volume of material mixed for use and its pot life.

In the case of ‘separate components’ equipment, resin and hardener are separately transported to the ‘mixing-head’ by means of fully automatic dispensing equipment. Therefore, pot-life is only of secondary importance here.

A distinction must be made between low pressure injection (upto 2 MPa) and high pressure injection (upto 30 MPa). The penetration

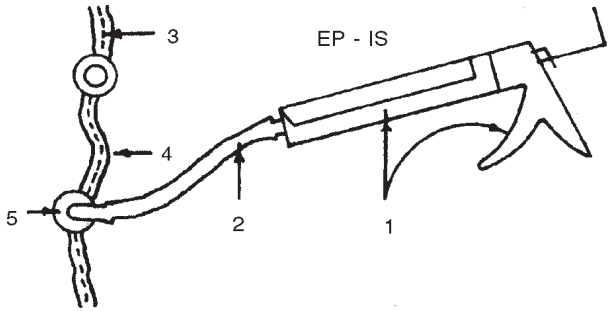

1. Injection gun. 2. Plastic tube. 3. Crack 4. Thixotropic compound. 5. Flanged injection nipple.

FIG. 7.4 a CRACK INJECTION

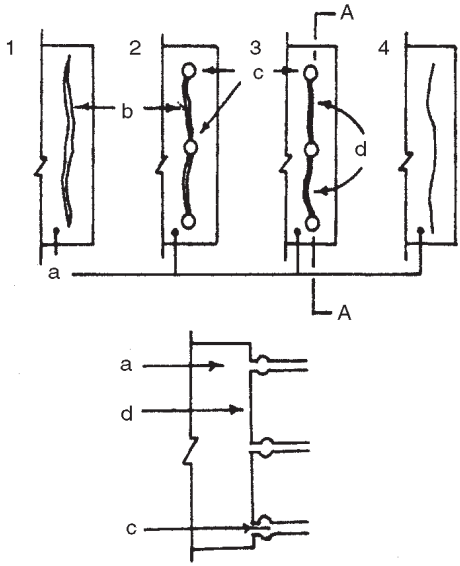

A - A

1. Untreated crack in face of wall 2. Crack cleaned and injection nipples fixed 3. Crack sealed with thixotropic compound and ready for injection 4. EP-IS system injected and nipples removed

(a) Concrete wall (b) Crack (c) Injection nipples
(d) Adhesive securing nipples and sealing cracks

Fig. 7.4 b Sequence of operation

speed of the injection resin does not increase proportionately, with increasing pressure.

The viscosity of the resin strongly influences the rate of injection, especially for small crack widths and in reaching the crack root.

7.5 Spalled Concrete - Hand applied repairs

In the case of repair to spalled concrete, it is particularly necessary to distinguish between mechanical damage and spalls caused by corrosion of reinforcement. Mechanical damage is usually relatively simple to repair. Corrosion of reinforcement, however, may be caused by contamination of the concrete with aggressive ions such as chlorides or by reduction in alkalinity of the concrete, and in either case restoration of the damaged member to its original state may be inadequate.

7.5.1 Preparation

Whatever the cause of damage, preparation of the structure for repair is vitally important. Application of a sound patch to an unsound surface is useless because the patch will eventually come away, taking some of the unsound material with it. Similarly, contamination that has once caused trouble must not be allowed to remain where it is likely to cause trouble again. Any attempt to take short cuts over preparation is a false economy.

The first step must be to remove unsound concrete. The area to be cut out should be delineated with a saw, cut to a depth of about 5 mm in order to provide a neat edge but the remainder of the cutting out can be done with percussive tools. Feather edges should be avoided if at all possible - edges should be cut for a depth of at least 10 mm as shown in Fig. 7.5 a & b. If any corroded reinforcement is present, the concrete should be cut back far enough to ensure that all corroded areas are exposed so that they can be cleaned.

Dust should be removed, as far as possible, from the surface of the concrete before patching material is applied, especially when resin-based compounds are to be used. Oil free compressed air jets are effective on small areas but they merely tend to redistribute dust on large areas. For these, industrial vacuum cleaners can be more effective.

7.5.2 Choice of material

The basic choice of repair system is between those based on Portland cement and those based on synthetic resins. In reinforced concrete, they protect reinforcement from corrosion in different ways. Cement based materials provide an alkaline environment for the steel (pH of the order of 12) and, in these conditions, a passivating film forms on the surface of the steel. Corrosion will occur if the alkalinity of the concrete surrounding the steel is reduced by carbonation i.e. a penetration of carbon dioxide from atmosphere or if aggressive ions such as chlorides are present. Consequently, the provision of an adequate thickness of dense concrete cover is important. Resin based materials do not generally provide an alkaline environment; they normally rely for their protective effect on providing cover that will exclude oxygen and moisture, without which corrosion would not take place.

7.5.2.1 Application of cement based system

After the surface has been prepared, a bonding coat should be applied to all exposed surfaces. It can consist of a slurry of cement and water only; but it is always desirable to incorporate a polymer admixture.

Typical proportions would be two part (by volume) cement to one part polymer latex, but the supplier's advice may vary. The first layer of patching material should be applied immediately after the bonding coat, while the latter is still wet. If some delay is inevitable, there are resin-based bonding agents that have a longer 'open time' than cement slurry. If reinforcing bars cross the repair they may provide a good mechanical anchorage for the patch, especially if the concrete has been cut away behind them.

Hand applied repairs usually consist of cement and sand mortar in proportions of 1:2.5 or 1:3, using coarse sand. If a smooth surface finish is required it may be necessary to use finer sand for the final layer. Repair mortar should be as stiff as possible consistent with full compaction and it should be rammed into place as forcibly as possible. An experienced operator can judge the degree of workability that is best suited to a particular job.

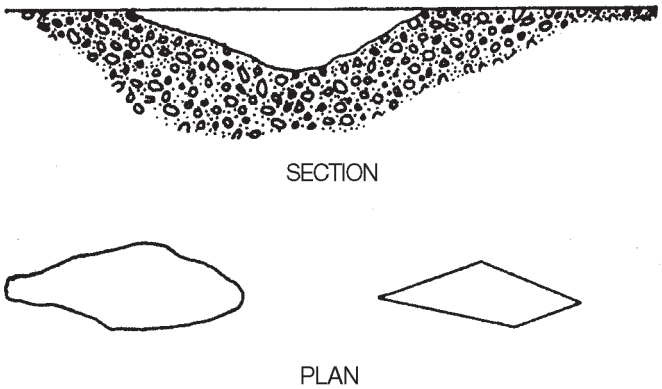

Fig 7.5 (a) Incorrect method of cutting out

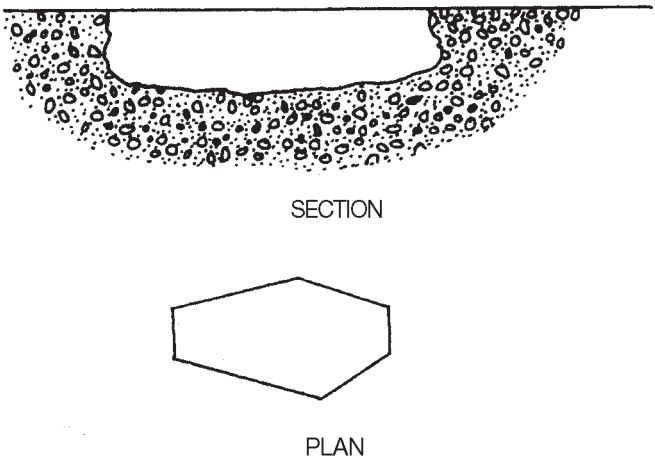

Fig. 7.5 (b) Correct method of cutting out

Repairs should be built up in layers and each layer should normally be applied as soon as the preceding one is strong enough to support it. The thickness of each layer should not normally exceed 20 mm. If there is likely to be a delay between layers, the first should be scratched as in normal rendering practice in order to provide a key, and a fresh bonding coat should be applied when work is resumed.

7.5.2.2 Application of resin based system

The requirements for preparation for resin-based repairs are generally similar to those for cement-based repairs. Removal of dust is particularly important.

Resin based materials are usually supplied as two or three constituents that must be mixed together immediately before use. This must be done thoroughly, especially when epoxy resins are involved. Use of mechanical mixers or stirrers is advisable.

It is necessary to apply a primer or tack coat of unfilled resin to the freshly exposed surface of concrete and reinforcement. In general one coat will be enough, but two coats may be needed in some cases, especially if the substrate is porous.

With the majority of resin-based systems, the patching material must be applied while the primer is still tacky and each successive layer of patching material must be applied before the previous one has cured too much.

Resin based materials cure by chemical reaction which starts immediately after the constituents are mixed, so they have a limited ‘pot life’, which decreases with increasing temperature. This must be borne in mind when repair work is being planned, and the quantity of material to be mixed in any one batch must be chosen so that it can be used before it becomes too stiff.

7.5.3 Curing

Resin-based repairs do not generally need any protection during their curing period, which is usually quite brief. Repairs consisting of cement, aggregates and water require careful curing by covering with absorbent material that is kept damp, preferably covered in

turn by polythene or similar sheets which are sealed at the edges. Shading from the sun may be necessary. Alternate wetting and drying must be prevented because of the alternating stresses that it would cause.

7.6 Guniting

This process of depositing a dense layer of sand cement mixture can be used profitably for repairing spalled concrete structures or weathered stone or brick masonry. The mortar or concrete is conveyed through a hose and pneumatically projected at high velocity on to the surface. The force of jet impinging on the surface compacts the material. Generally, a relatively dry mixture is used and so the material is capable of supporting itself without sagging or sloughing even during vertical and overhead applications.

7.6.1 Equipments and Materials

The equipment used for this process is a cement gun (conforming to IS:6433), which is operated throughout by compressed air. The sand used should comply with the requirements given in IS: 383 and graded evenly from fine to coarse as per zone II and zone III grading with a nominal maximum size of 6 mm. One part of cement shall be added to 3 parts of sand. The optimum moisture content for sand is in the range of 3 to 6%. This mixture is placed in the feeding chamber and by the action of compressed air it is fed into the working chamber through a cone valve controlled from outside. The mixture is then agitated through an agitator mounted on a vertical shaft. The mixing time shall be not less than 1 minute. The mixed material is carried in suspension by compressed air through the delivery hose to a nozzle. As the material passes through the nozzle body, it is hydrated with water introduced in the form of a fine needle spray controlled through a valve in the nozzle body. The water-cement ratio for concrete used in this process is normally in the range of 0.35 to 0.50. For a length of hose upto 30 m the air pressure at the nozzle shall be 3.0 kg per sq.cm or more. Where the length exceeds 30 m, the pressure shall be increased by 0.35 kg per sq.cm for each additional lead of 15 m and by 0.35 kg per sq.cm. for each 7.5 m that a nozzle is raised above the gun. The water pressure at the discharge nozzle shall be sufficiently greater than the operating air pressure to ensure that water is intimately mixed with the other material (Fig. 7.6).

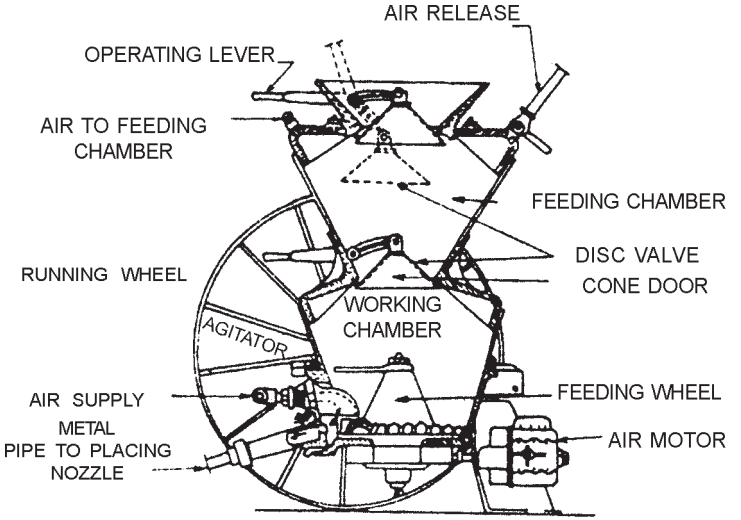

GENERAL ARRANGEMENT
OF
A GUNITING MACHINE

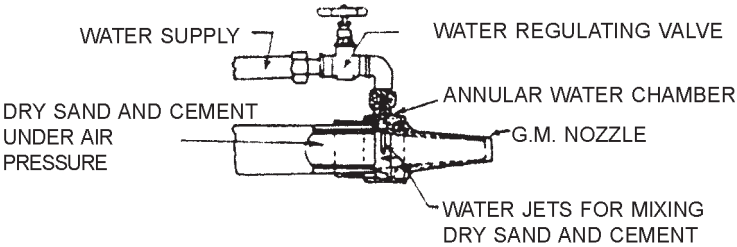

DETAILS OF PLACING NOZZLE

Fig. 7.6 Guniting machine

7.6.2 Procedure

In case of repairs to existing deteriorated concrete all unsound materials shall be first removed. The exposed reinforcement shall be cleaned free of rust, scales, etc. In the case of stone masonry all weathered or disintegrated part of stone shall be knocked down with a chisel and/or a heavy hammer so as to expose sound and undamaged part of the stones. The stone or brick masonry surface shall be cleared of all loose mortar, dust, moss, etc. and washed down with a strong jet of air or water. If mortar at the joint is weak, the joint shall be raked to about 10 mm depth and all loose and dry mortar scraped out from inside.

The form work, if required, shall be of plywood or other suitable material fixed in proper alignment and also to proper dimensions. For repair work the reinforcement shall be fixed to existing masonry or concrete by using wire nails or dowels at one metre intervals. Depending on the thickness and nature of work, reinforcement may consist of either round bars or welded wire fabric. Hard-drawn wire fabric consisting 3 mm dia wires at 10 cm centers in both directions can be used. The minimum clearance between reinforcement and formwork shall be 12 mm for mortar mix and 50 mm for concrete mix.

Each layer of shotcrete (concrete placed by guniting) is built up by making several passes or loops of the nozzle over the working area. The distance of the nozzle from the working face is usually between 0.5 and 1.5 m. The nozzle shall be held perpendicular to the surface of application. The amount of rebound concrete varies with the position of work, angle of nozzle, air pressure, cement content, water content, size and grading of aggregate, amount of reinforcement and thickness of layer.

Rebound of concrete with different positions of work is shown in Table 7.3 given below.

Table 7.3 Rebound of concrete

Type of surface	% Rebound
Slabs	05 to 15%
Sloping and vertical walls	15 to 30%
Overhead work	25 to 50%

Rebound shall not be worked back into construction. If it does not fall clear of the work it should be removed. Rebound shall not be salvaged and included in later batches. Where a layer of shotcrete is to be covered by a succeeding layer, it shall first be allowed to take its initial set. Then all laitance, loose material and rebound shall be removed by brooming. Surfaces shall be kept continuously wet for at least 15 days after guniting.

7.7 Jacketing

7.7.1 General

Railways are often required to undertake strengthening of existing bridge substructures in connection with works of following nature.

1. Increase in vertical clearance to satisfy codal provisions.
2. Regrading of track
3. Introduction of heavier type of locomotives and other rolling stock with higher longitudinal forces.

With the raising of formation levels, the existing substructures are subjected to higher loading by way of higher earth pressure and increased moments. To strengthen the substructure, the cross-sectional area may require to be increased. For this purpose jacketing of existing substructure is resorted to (Fig. 7.7). Jacketing should be undertaken only when the existing structure is fairly sound and does not show signs of distress. All cracks should be thoroughly grouted before providing the jacket. For the jacketing to be effective, it has to be taken right upto the foundation and integrated at this level with the existing foundation.

The foundation shall be exposed for only limited width at a time and for the shortest time necessary for strengthening so as to avoid endangering the safety of the structure. Site and soil conditions including water table shall be considered for deciding the width of foundation to be exposed at a time. The minimum thickness of jacketing should be at least 150 mm.

7.7.2 Procedure

The face of the existing masonry or the concrete should be thoroughly cleaned free of all dirt. Before laying new concrete, neat cement slurry should be applied uniformly over the face of the old masonry. Dowel bars consist of M.S. rods 20 mm dia hooked at the exposed end. M.S. tie bar flats with the ends split can also be similarly fixed into the old masonry. These dowels should be taken down to a depth of not less than 200 mm inside the masonry (Fig. 7.8). For driving of dowels many times holes are required to be made. These holes must be drilled and not made by pavement breakers. The spacing of the dowels should not be more than 450 mm horizontally and vertically. The dowels should be staggered. The new concrete layer should be of minimum cube strength of 250 kg per sq.cm at 28 days. A mat of steel reinforcement bars spaced at minimum 200 mm horizontally and vertically may be provided as distribution reinforcement. The concrete should be cured for a minimum period of 28 days by covering with gunny bags or similar material and splashing with water.

Fig. 7.7 Jacketing of bridge pier in progress

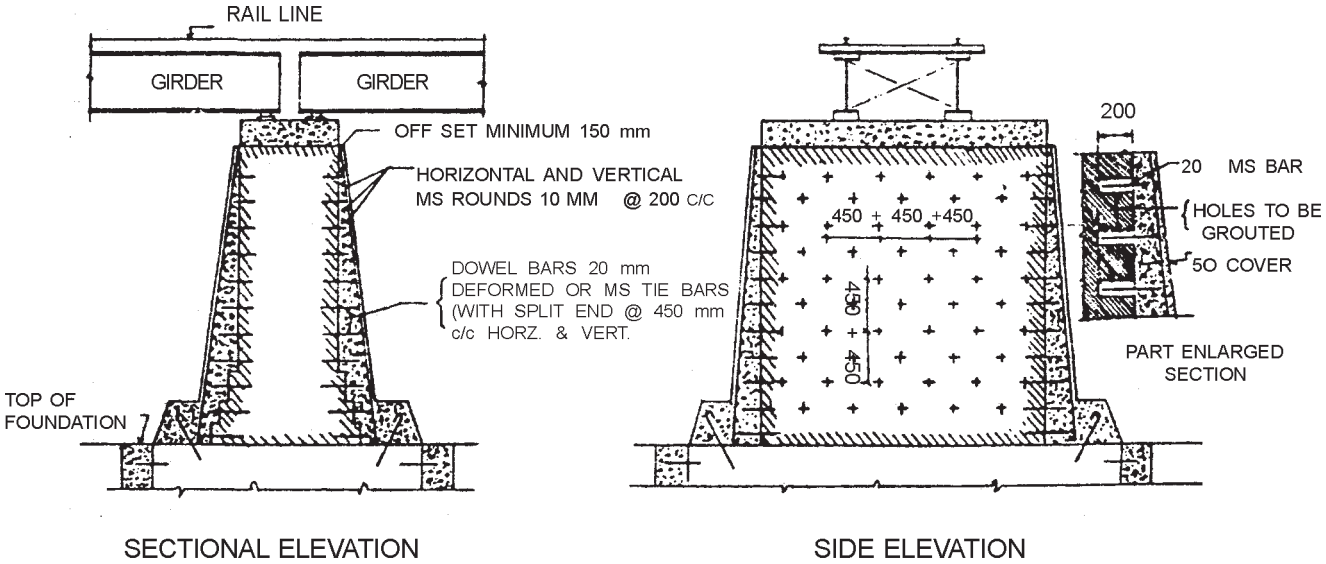

Fig. 7.8 Strengthening of substructure by jacketing

CHAPTER 8

MAINTENANCE OF STEEL BRIDGES

8.1 Painting of girder bridges

Girder painting is essentially an application of surface coating to the steel work so as to inhibit corrosion. The basic principle underlying maintenance painting is not to allow deterioration of existing paint film to reach such a stage that rusting starts underneath the paint film.

8.1.1 Surface preparation

Correct surface preparation is the most important single factor in ensuring the good performance of a painting scheme applied to steel work. The duration of protection afforded by a given painting scheme when applied to a well-prepared surface is many times more as compared to that obtained on a badly prepared surface. Removal of rust, oil, grease and dirt is necessary to ensure adequate adhesion of paint film to the surface.

The surface preparation in maintenance painting depends upon the condition of the existing paint film.

1. Where only the finishing coat of paint shows signs of deterioration, the surface should be washed with lukewarm water containing 1 to 2% detergent to remove salt deposits and grime. After this, the surface is to be dried and lightly wire brushed and sand papered.

On this prepared surface, finishing coat of paint is to be applied.

2. In cases where the parent metal is exposed and portions of girders show signs of corrosion, the surface preparation is done in the following manner:

i. Sand or grit blasting is one of the best methods of surface preparation by which the surface can be completely cleared of mill scale and rust. A properly sand blasted steel surface appears silvery grey in colour.

ii. Scraping, chipping and wire brushing - In this method, the surface is scraped, chipped and wire brushed manually or by power tools so as to remove the mill scale and rust. Finally, the surface is sand-papered and dusted. The surface prepared by this method is of a lower standard than the one prepared by the sand blasting.

iii. Flame cleaning by directing an oxyacetylene flame on the steel surface and then wire brushing is another method. Though it is inferior to grit blasting, it is a good method for use with excessively rusted surface. Flame cleaning should not be done on plates with thicknesses 10 mm or less as it may lead to permanent distortion of such plates. The surface being flame cleaned should not be exposed to the flame for a longer time. After passage of flame the surface is cleaned by wire brush, sand papered and dusted.

iv. Temporary coatings: If for any reason, painting cannot immediately follow surface preparation, corrosion can be prevented for a short time by means of temporary coating of linseed oil applied uniformly and thinly (one third litre on 10 sq.m area will be sufficient) Modern pre-fabrication primers are also available.

8.1.2 Painting scheme as per IRS Code

The following painting schedule is to be adopted in areas where corrosion is NOT SEVERE.

1. **Priming coat**

   One coat of ready mixed paint zinc chromate priming to IS:104, followed by one coat of ready mixed paint red oxide zinc chrome priming to IS:2074.

   OR

   Two coats of zinc chromate red oxide primer to IRS–P 31.

2. **Finishing coat**

   Two cover coats of Paint to IS:13607 with colour specified by Zonal Railway or any other approved paint applied over the primer coats.

The painting scheme for girders in areas where corrosion is SEVERE is given below.

1. **Priming coat**

   One coat of ready mixed paint zinc chromate priming to IS:104, followed by one coat of ready mixed paint red oxide zinc chrome priming to IS:2074.

2. **Finishing coat**

   Two coats of aluminium paint to IS:2339

8.1.3 Important precautions

a) Paints from approved manufacturers only should be used.

b) Special care should be taken to shift sleepers on girders or rail bearers to clean the seating very thoroughly before applying the paint.

c) Paint should be mixed in small quantities sufficient to be consumed within 1 hour in the case of red lead paint and 5 days in the case of red oxide paint.

d) While painting (Ref IS : 13607) with red oxide paint, a little quantity of lamp black shall be added to the paint while doing the first coat to distinguish it from the second coat. Similarly, in case of aluminium paint a little blue paint can be added instead of lamp black for 1st coat.

e) Paints should be used within the prescribed shelf life from the date of manufacture. The quantity of paint procured should

be such that it is fully utilized before the period prescribed for its use.

The shelf life of various paints used in the Railways are as follows:

i)	Paint Ready Mix Zinc crome primer (IS : 104)	: 1 Year
ii)	Paint to IS : 13607 with colour specified by Zonal Railway	: 1 Year
iii)	Paint Aluminium : 13607 with colour specified by zonal Railway	
	When paste and oil are not mixed	: 1 Year
	When paste and oil are mixed	: 4 Month
iv)	Oil linseed boiled	: 2 years
v)	Paint Ready Mix Red Oxide Zinc Crome (IS : 2074)	: 1 Year
vi)	Red Oxide Zinc Cromate Primer (IRS-P-31)	: 1 Year

f) Brush shall not be less than 5 cm in width and should have good flexible bristles. A new brush, before use, should be soaked in raw linseed oil for at least 24 hours. The brushes shall be cleaned in linseed oil at the end of each day's work.

g) Dust settled after scraping shall be cleaned before applying paint.

h) When the paint is applied by brush, the brush shall be held at 45^0 to the surface and paint applied with several light vertical/lateral strokes turning the brush frequently and transferring the paint and covering the whole surface. After this, the brush shall be used cross wise for complete coverage and finally finished with vertical/lateral strokes to achieve uniform and even surface.

j) Rags, waste cotton, cloth or similar articles should not be used for applying paint.

k) The coat of paint applied shall be such that the prescribed dry film thickness is achieved by actual trial for the particular brand of paint. The applied coat of paint shall be uniform and free from brush marks, sags, blemishes, scattering, crawling, uneven thickness, holes, lap marks, lifting, peeling, staining, cracking, checking, scaling, holidays and allegatoring.

l) Each coat of paint shall be left to dry till it sufficiently hardens

before the subsequent coat is applied.

m) The entire content of a paint drum should be mixed thoroughly either by pouring a number of times or by mechanical mixing to get uniform consistency. The paint should not be allowed to settle down during painting by frequent stirring or mixing. Driers such as spirit or turpentine should not be used. Mixing of kerosene oil is strictly prohibited.

n) The maximum time lag between successive operations as indicated below shall not be exceeded.

i) Between surface preparation and the application of primer coat	24 hours
ii) Between surface preparation and 1st finishing coat in the case of patch painting	48 hours
iii) Between the primer coat and the 1st finishing coat	7 days
iv) Between the Ist finishing coat and the 2nd finishing coat	7 days

8.1.4 Long life painting scheme

For locations where girders are exposed to corrosive environment i.e. flooring system of open web girders in all cases, girders in industrial, suburban or coastal areas etc., protective coating by way of metallising or by painting with epoxy based paints may be applied.

1. Metallising

In metallised protection base metal like zinc or aluminium is lost by the atmospheric action, while the base metal (steel) remains unaffected. Zinc or aluminium can be sprayed on the surface prepared by grit/sand blasting for giving such protection, known as metallising.

i) Surface preparation :

a) The surface of steel shall be free from oil, grease, bituminous materials or other foreign matter, and shall provide an adequate key for the sprayed metallic coating. This may be achieved by flame cleaning or by sand blasting. However,

the abrasive once used for cleaning heavily contaminated surface should not be reused even though rescreened.

b) Final cleaning is done by abrasives i.e. Chilled iron grit G.24, as defined in BS : 2451 or Washed salt free angular silica sand of mesh size 12 to 30 with a minimum of 40% retained on a 20 mesh screen, as per following details :

Air Pressures : Not less then 2.109 kg per sq.cm.

Nozzle position : At right angles to and approximately 22.5 cm. from the surface

Nozzle dia : Not exceeding 12 mm

c) The final surface roughness achieved shall be comparable to roughness with a reference surface produced in accordance with Appendix A of IS : 5909 and shall provide an adequate key for subsequently sprayed metal.

ii) Metallising process :

a) The sprayed coating shall be applied as soon as possible after surface preparation. The wire method shall be used for this purpose, the diameter of the wire being 3 mm or 5 mm. The composition of the aluminium to be sprayed shall be preferably in accordance with BS : 1475, material 1-B (99.5%) aluminium otherwise as per IS : 739.

b) Clean dry air at a pressure of not less than 4.218 kg per sq.cm. shall be used. The minimum thickness of metal coating applied shall be 110 microns and average thickness 150 microns.

c) The specified thickness of coating shall be applied in multiple layers, not less than two. The surface after spraying shall be free from uncoated parts or lumps of loosely spattered metal.

d) Atleast one layer of the coating must be applied within 4 hours of blasting and the surface must be finished to the specified thickness within 8 hours of blasting.

iii) Inspection :

a) The metal coating shall be checked for thickness by an approved magnetic thickness measuring gauge. Minimum metal coat shall be 110 micron but average thickness shall be 150 micron. The frequency of testing shall be atleast one

test per m^2 of painted area.

b) The calibration of the gauge should be checked against a standard of similar thickness within an accuracy of 10 per cent.

c) Adhesion Test: To check if the metallising layer has good adhesion with the steel surface, i.e. to verify if the cleaning/ blasting has been done properly and the blasted surface has sufficient roughness to ensure the metallising layer to have good adhesion, an adhesion test shall be performed. For this, hardened steel scribe ground to a sharp 30° point shall be taken.

   Using this scribe, make two parallel lines at a distance apart equal to approximately 10 times the average coating thickness. In scribing the two lines, apply enough pressure on each occasion to cut through the coating to the base metal in a single stroke. If a surface is properly metallised, the metallising layer between the two lines shall not come off.

iv) Finishing coat of painting :

a) After the metallising, any oil, grease etc. should be removed by thorough wash with a suitable thinner and allowed to dry for 15 minutes. The painting may be applied by brush or by spray. The first coat shall be wash primer to SSPCPT - 3 53T or Etch primer to IS : 5666.

b) The second coat shall be zinc chromate primer to IS : 104. The zinc chrome should confirm to type 2 of IS : 51. The 3rd and 4th coats shall be aluminium paint to IS : 2339.

v) Maintenance painting of metallised girders :

a) The need for periodical repainting and the method to be followed will depend on the condition of the existing paint. In most cases complete removal of existing paint film may not be necessary.

b) The surface is cleaned of all oil, dirt and other foreign material. If the existing top coats of aluminium paint are found to be in good condition, it will be sufficient to apply one additional coat of the same paint, once in 5 years or at such closer intervals as specified.

c) However, if the existing paint is found flaked or damaged, it should be removed completely by wire brushing without the use of scrapers or chipping tools. In case the original coat of zinc chromate primer is also damaged in patches, such patches should be painted with fresh zinc chromate primer before applying the finishing coat of aluminium.

d) In the event of any localised damage to the metallised coating of aluminium, as evidenced by traces of rust, the affected portion should be thoroughly cleaned of all rust before the priming and top coats of paints are applied. Rust streaks caused by droppings from the track or by contact with hook bolt lips should not be mistaken for corrosion.

vi) Precautions to be taken while inspecting metallised girders :

The use of testing hammers for rivet testing, or any other operation shall not be resorted to since these can damage the metallised coating. Any looseness of the rivets in bracings etc. may be detected from visible signs such as the appearance of rust under the rivet head.

2. Epoxy based Paints

i) Surface Preparation :

a) Remove oil/grease from the metal surface by using petroleum hydrocarbon solvent to IS : 1745.

b) Prepare the surface by sand or grit blasting to Sa 2½ to IS : 9954 i.e. near white metallic surface

ii) Painting :

a) Primer coat :

Apply by brush / airless spray two coats of epoxy zinc phosphate primer to RDSO specification No. M & C /PCN-102/86 to 60 microns minimum dry film thickness (DFT) giving sufficient time gap between two coats to enable first coat of primer to hard dry.

b) Intermediate coat :

Apply by brush/airless spray-one coat of epoxy micaceous iron oxide to RDSO specification No. M & C /PCN-103/86 to 100 microns minimum DFT and allow it to hard dry.

c) Finishing coat :

Apply by brush/airless spray two coats of polyurethane aluminium finishing to RDSO Specification No. M & C /PCN-110/88 for coastal locations or polyurethane red oxide (red oxide to ISC 446 as per IS : 5) to RDSO Specification No. M&C/PCN-109/88 for other locations to 40 microns minimum DFT giving sufficient time gap between two coats to enable the first coat to hard dry. The finishing coats to be applied in shop and touched after erection, if necessary.

8.2 Replacing loose rivets

8.2.1 General

i) Slight slackness of rivet does not cause loss of rivet strength.

ii) Renewal of slack rivets should be done only when the slack rivets are in groups or are bunched up. Individual scattered slack rivets need not be touched.

iii) Rivet is to be considered finger loose when the looseness can be felt by mere touch, without tapping. Rivets should be considered hammer loose, when the looseness can be felt only with the aid of a hand hammer.

Loose rivets occur more frequently at certain locations especially where dynamic stresses, reversal of stresses and vibrations are at their maximum. Similarly in-situ rivet connections are carried out under less ideal conditions than in the case of shop rivets and hence the incidence of loose rivets is likely to be more at such joints.

8.2.2 Procedure

Generally the loose rivets are replaced by using pneumatic equipment. In pneumatic riveting, the driving of the rivet, filling the hole and formation of the head is done by snap-mounted pneumatic hammer by delivering quick hard blows on the practically white-hot rivet. The rivet head is held tightly against the member through a pneumatically/hand-pressed dolly. The rivet shank is about 1.5 mm

less than the diameter of the drilled hole. The normal working pressure of the compressed air should be between 5.6 and 7 kg per sq.cm. The length of the rivet shank is given by the formula:

$L = G + 1.5D + 1$ mm for every 4 mm of grip or part thereof for snap head rivet.

$L = G + 0.5D + 1$ mm for every 4 mm of grip or part thereof for counter shunk rivet.

Where L = length of rivet shank

G = length of grip in mm

D = diameter of rivet in mm

While riveting a loose joint, not more than 10% rivets should be cut at a time. Besides, after cutting, each rivet shall be immediately replaced with a turned bolt of adequate diameter and length. Next rivet shall be cut only after such replacement as above. Parallel drifts can be used in place of 50% of the turned bolts provided the work is executed under block protection. It is preferable to drill a rivet out than to use rivet burster as the latter cuts the rivet head in shear, imparting very heavy shock to the adjoining group of rivets. In a joint where only a few rivets are loose, the adjoining rivets are also rendered loose while bursting the loose rivets. In any case, after the loose rivets at a joint are replaced, all rivets at the joint should be rechecked for tightness.

The rivet must be heated almost to a white heat and to a point when sparks are just beginning to fly off. The whole rivet must be brought to the same heat. The rivet should be driven within 20 seconds of the rivet leaving the fire. While the rivet is hot, it must be driven straight keeping the hammer in straight position. The riveter must have his staging at a height which enables him to put the whole weight of his body behind the hammer. This prevents it from bouncing.

8.3 Loss of camber

Steel triangulated (open web) girders are provided with camber to compensate for deflection under load. Out of the total design camber, the part corresponding to deflection under dead load is called dead load camber. The balance called live load camber should

be available as visible and measurable camber in the girder when not carrying load. Loss of camber can be attributed to:

1. Heavy overstressing of members beyond elastic limit
2. Overstressing of joint rivets
3. Play between rivet holes and rivet shanks because of faulty riveting.

Out of the above, item (1) can be ruled out unless heavier loads than those designed for are being carried over the bridge. If this is found to be the case, action should be taken for immediate replacement of the girder. Item (2) can be checked from design. The action required to be taken is to lift the panel points on trestles and jacks up to full design camber (including dead load camber) or till the bearings start floating. The existing rivets should be removed and replaced with bigger diameter rivets or with bigger gussets and more number of rivets. As regards item (3), if the number of rivets and diameter are sufficient, then the existing rivets can be replaced by sound rivets.

8.4 Maintenance of steel bearings

Cleaning and greasing of bearings is one of the important maintenance works to avoid premature failure of bearings and reduce recurring heavy repair cost of bed block and masonry below bed block. Steel bearing strip resting on steel base plate has a tendency to stick together on account of corrosion, and cease the movement of bearings. This is called as Frozen Bearing. Sliding bearings of plate girders are generally designed keeping both ends free. When bearings are frozen, a large amount of longitudinal force is transferred to the substructure for which the substructure may not have been designed. Upon introduction of new loadings on the Indian Railway, longitudinal forces have increased considerably whereas the old substructures had been designed without considering such large longitudinal forces. Sometimes, even repairs will not hold good because of frozen bearings is not eliminated by greasing. It has been laid down that the steel bearings of all girder bridges should be greased once in 3 years to ensure proper movement of bearing plates. This should be done once every two years when track consisting of LWR is continued over bridge span.

8.4.1 Modus operandi of oiling and greasing of steel sliding bearing.

Lifting of girders: For greasing the bearings girders are required to be lifted. But the gap between the bottom flange of plate girders and the bed block generally varies from 100 mm to 150 mm. The standard jacks normally available have a closed height of at least 300 mm. These jacks, therefore, can't be used for lifting the girders without making special jacking arrangements. The safest arrangement for Jacking is shown in fig 8.1.However for different span this arrangement could be as follows.

1. For plate girders upto 6.1 m span, jacks can be directly applied below end sleeper ensuring firm hook bolt connection, since load to be lifted is about 4 to 5 ton only.
2. Jacking arrangement for span 9.15 m plate girder requires provision of a hard wood beam below inner top flange for lifting the girder.
3. Jacking arrangement for span 12.2, 18.3, 24.4 and 30.5 m plate girder requires provision of a steel beam.

The provision of jacking steel beam and its removal is difficult. It requires more man power and also it is time-consuming on account of heavy weight of the beam and limited working space on bridge piers. Field officials, many times, apply jack to the end cross frame angle (diagonal) to avoid provision of the jacking beam, to lift the girder. This may cause bending of the angle on account of its slender size, which results in lifting of bearing strips inside when lowered on base plate. This improper seating of the bearing strip will cause hammering action during subsequent passage of train resulting in damage to the bed block and masonry of the substructure. Therefore the method of provision of jacking beam to outside girder as shown in Fig 8.1 is preferable. This requires less manpower and less time for lifting of the girder.

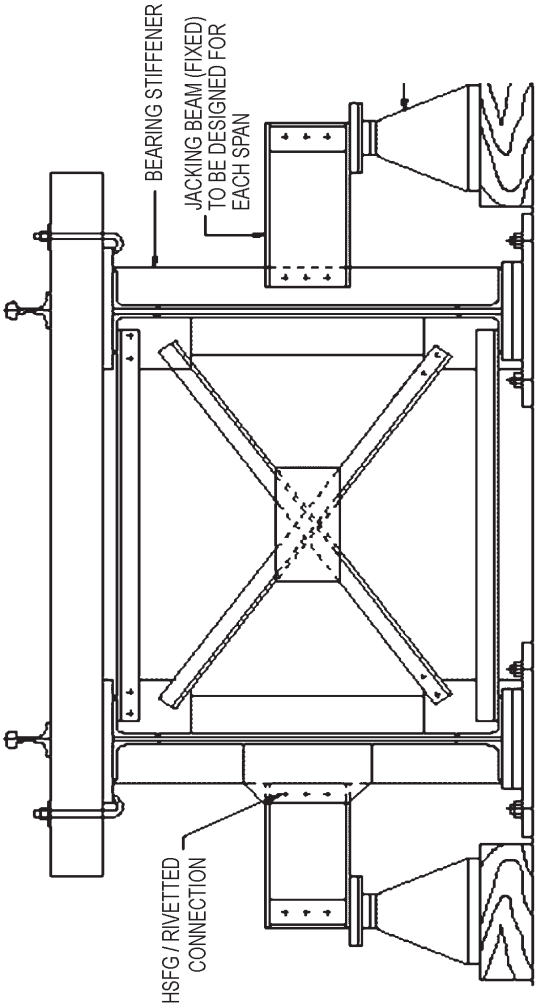

Fig-8.1 Proposed Jacking arrangement for 12.2m, 18.3m & 24.4m spans

Cleaning and greasing of steel sliding bearings: Following equipments are required for greasing of steel sliding bearings:

1. Jacks (50 ton capacity) - 2 nos.
2. Hard wooden packing below and above jack

3. Grease graphite Grade 3 conforming to 1S:508
4. Kerosene or released black oil for cleaning
5. 6 mm thick steel scrapers
6. Mortar pan
7. Cotton waste

Greasing of sliding bearings can be undertaken under traffic with issue of caution order and line protection for temporary works as per provision of IRPWM.

Lifting of girder should be restricted to 8 to 10 mm only, ensuring that the bearing strip does not get lifted over locking strip and guide strip to avoid creep of girder in logitudinal and lateral direction. For lifting, it is not necessary to break the track. Only loosening of fish bolts and dog spikes over a small length on both sides of the pier is sufficient. Only one end of the girder should be lifted at a time and steel scraper inserted between bearing strip and base plate to remove old grease dust and dirt. The contact surlace is cleaned with oil and grease applied. Girder is then lowered back over the base plate.

Time required for all these activities is approximately 15 to 20 minutes.

8.4.2 Modus operandi of Cleaning and greasing of Rocker & Roller bearings of open web through girders

In case of standard open web through girders, no separate jacking arrangement is required as the end cross girders are designed and provided with stiffener and pad plate for provision of jack for lifting. Gap between bottom of cross girder and top of bed block is about 600 mm, hence any type of jack of 100 ton to 200 ton capacity can easily be used for lifting. In case of non standard spans, the end cross girder requires adequate strengthening or special jacking beam below the bottom boom. In addition to this the equipment required are wire rope with turn buckle arrangement for holding the free end and all other equipments arranged for plate girder.

Greasing of rocker and roller bearing should be carried out under traffic block under the supervision of an official not below the rank of ADEN/ABE.

Following precautions and preliminary lifting of girder arrangements are required:

1. Ensure tightness of rivets connecting end cross girder and end panel point of truss.
2. Provide hard wooden packing below the end cross girder to support the girder in case of failure of jacks. This should be done at three places to prevent tilting of this girder.
3. Remove fish plates and rail sleeper fastenings over adjacent spans to avoid overloading the jack on account of weight of adjoining span and stiffness of the track.
4. If trolley refuge is connected to both spans on any pier, loosen the bolted connection of adjoining span to avoid overloading of jack and damage to the trolley refuge.
5. While lifting the fixed end, the other end being free, the girder is likely to creep longitudinally. To prevent this, provide hard wood packing between the ends of girder on pier and between girder and the ballast wall on abutment.
6. Jacks should be kept in working order and tested to 1.5 times the load they are expected to lift. Keep one spare jack as stand by.
7. During lifting of girder, precaution should be taken to prevent creep of rail.

Method of Greasing: Greasing of fixed end requires 20 to 25 minutes. The lifting is hardly 10 mm, ensuring that the gap is created between saddle block and knuckle pin. Saddle is not lifted above collar to prevent lateral creep of the girder. Steel scraper is used to remove old grease, dust and dirt. The contact area is cleaned with oil. Grease is applied and then girder is lowered back.

Greasing of free end requires 45 to 50 minutes. Knuckle plate is tied to the saddle plate with wire rope having turn buckle arrangement to release the load from roller when the girder is lifted.

When the girder is lifted about 10 mm and rollers are free, link plate and tooth bar are removed after opening the stud connections. All rollers should be taken out and cleaned with scraper and these are sand-papered with a fine sandpaper of zero grade. Rollers should be examined for any possible signs of flattening or minute cracks with a magnifying glass. Grease graphite grade 3 conforming to IS 508 is applied over the base plate evenly below the roller contact area. The rollers are then placed in position and grease applied at the top contact surface. Link plate and tooth bars are connected with care so that tooth bar is placed in the same inclination as per the drawing.

With the help of turn buckle of wire rope sling, the knuckle plate is lowered over the rollers. This will create gap between the saddle block and knuckle plate. Cleaning and greasing of this area is then carried out similar to the fixed end and girder is lowered back. While taking out rollers for examination and greasing, take special precautions to prevent the rollers from falling-off the bed block.

♦ ♦ ♦

Annexure A/1

Proforma for Bridge Inspection Register for recording details of each major & important bridges (AEN) (Para 1.5)

1. General :

Division……Sub Division……..…Section……...…….

Br. No……Span details……No……..…m.

Name of river …… Class of structure……....……

Type of girder……..Strength of girder……..

Rail level……..m

High flood level ……..m

Danger level……..m

Bottom of girder / slab or crown of arch …….m

Abutment : Materials of construction

i) (with splayed wing walls)

ii) (with parallel wing walls)

Pier : type

Strength of : Piers
Abutments
Wing walls

Depth of cushion …….m below bottom of sleeper (for arch slab top and pipe bridges only)

2. Previous history regarding high flood, scour, erosion, suspension of traffic etc.

3. Record of afflux : Year ……....Max. afflux……

4. Foundation details ……Velocity of flow……

Pier/ Abutment No.	Details of wells/ piles/ open foundation	B.F.	T.F.	Bed level	Floor level	Thickness of floor	Safe scour limit
1	2	3	4	5	6	7	8

5. Description of protection works (wherever provided)

Description	Up stream		Down stream	
	Left	Right	Left	Right
i) Length of guide bund				
ii) Crest level of guide bund				
iii) Crest width				
iv) Width and depth of apron				
v) Thickness of pitching				
vi) Width and depth of nose of guide bounds				
vii) (a) Depth below floor level and distance from the center line of bridge of curtain wall				
(b) Drop wall Deepest known scour, year and its location.				

6. In the case of bridges with railway affecting works, the following details may be recorded:

   i) Tank and its capacity and distance from bridge

   ii) Dam/weir across river, its designed discharge and distance from bridge

   iii) Details of marginal bunds

   iv) Details of road/canal running parallel.

7. Key plan of the bridge.

Annexure A/2

Proforma for Bridge Inspection Register for entering condition of each major & important bridges (AEN) (Para 1.5)

Condition of the bridge at the time of inspection

Date of inspe-ction	Foundation and flooring, exent of scour and damage	Masonry condition, extent of defect in sub-structure	Protective works and waterway scour, slips or	Bed blocks cracks, tend-ency to settlements, sanctioned reserve available and whether water way is clear	Girder bearings & expan-sion arrange-move ment
1	2	3	4	5	6

Steel work in the case of steel/composite girder bridge, structural condition and state of painting	PSC/concrete/ composite girder in superstructure-condition of girders/ beams, any cracks or defects noticed, condition of slabs/decks	Sleepers-year of laying, condition and renewals required.
7	8	9

Track on bridge				Drainage arrange-	Track on approaches
Line & level	Bearing plates & their seating	Guard rails	Hook bolts	ments on ballasted deck and arch bridge	Approach slabs, ballast walls & rails, earth slopes,etc.
10	11	12	13	14	15

Other items like trolley refuges/foot paths, fighting equipment etc.	Action taken on last year's notes fire	Initial of inspecting official and URN	Initials of higher officials with remarks
16	17	18	19

Annexure A/3

Proforma for Bridge Inspection Register for recording details of each minor bridges (AEN) (Para 1.5)

Minor Bridges :

Division……Sub Division……..…Section……..……

Br. No……Span details……No……m.

Name of river …… Class of structure…….....……

Type of girder……..Strength of girder……..

Rail level……..m

High flood level ……m

Danger level……..m

Bottom of girder / slab or crown of arch ……m

Abutment	Material of Construction	Strength
(with splayed wings)		
(with parallel wings)		

Depth of cushion……m below bottom of sleeper (Arch, slab top & pipe bridges only)

Foundation details (Reduced level)

Bottom of foundation.....m

Floor or bed level.....m

Thickness of floor.....m

Bottom of drop wall/curtain wall.....m

Record of afflux, year and velocity

Deepest known scour (if any), year and location Space for key plan of the bridge

Annexure A/4

Proforma for Bridge Inspection Register for entering condition of each minor bridges (IOW/PWI & AEN) (Para 1.5)

Date of inspection	Condition of bridge at the time of inspection	Action taken on the previous year's notes	Initial of inspecting officer with remarks if any	Initials of higher officials with remarks If any
1	2	3	4	5

♦ ♦ ♦

List of References

1. 81st Bridge Standard Committee, Jabalpur, 21-22 Feb., 2012.
2. 82nd Bridge Standard Committee, Banglore, 31-31 Jan., 2014
3. Bridge Inspection and Maintenance, (2005), A.K. Yadav, IRICEN.
4. BS-14 (2001) – Dyrability of Concrete Structures, RDSO.
5. BS-36 (2001) – Instrumentation Techniques to Monitor loss of Pre-Stress and Corrosion of Steel in Pre-Stressed Concrete. RDSO.
6. BS-41 (2001) – Guidelines for Integrity Testing of Piles, RDSO.
7. BS-48 (2002) – Gudelines for Inspection Maintenace and Rehabilitation of Concrete Bridges, RDSO
8. BS-82 (2006) – Guidelines on Use of Core Cutter and Other Miscellaneous Tools on Railway Bridg, RDSO.
9. BS-88 (2008) – Technical Literature on Corrosion/ Carbonization Protection in Concrete Structure, RDSO.
10. BS-90 (2008) – Study of Probable Cause of Cracks in Different Members and Assesssment of Residudual Fatigue Life of Bridge No. 46 Up/Mid. Line Near Bilaspur, RDSO.
11. BS-96 (2008) - Guidelines on Under Water Inspection of Bridges, RDSO.
12. BS-102 (2009) – Guidelines for Inspection & Maintenance of Bridge Bearings, RDSO.
13. BS-103 (2009) – Guidelines on Non-DestructiveTesting of Bearings, RDSO.
14. BS-104 (2009) – Guidelines on Use of Acoustic Emission Technique (AET) on Railway Bridges, RDSO.
15. BS-106 (2010) – Briad Guidelines for Instrumentation of Bridges for Running Higher Axle Load, RDSO.
16. BS-113 (2014) Guidelines for providing arrangement for bridge inspection.

17. Concrete Technology, (2013), Ghanshyam Bansal, IRICEN.

18. Handbook of Material Testing, (2012), R.K. Verma, IRICEN.

19. Inspection and maintenanceof Steel Girder, (2006), R.K. yadav, IRICEN.

20. Inspection, Assesment, Repairs and Retrofitting of Masonary Arch Bridges, (2009), Ajay Goel, IRICEN.

21. IS 51 (1998) : Zinc Cromate for Paints.

22. IS 104 (1979): Ready mixed paint, brushing, zinc chrome,priming.

23. IS 107:1952 READY Mixed Paint, Air Drying, Red Oxide Zinc Priming Specification

24. IS 739 (1992): Wrought aluminium and aluminium alloy wire for general engineering purposes.

25. IS 1360 (1989): Engineers' Pattern Tee Squares.

26. IS 1745 (1978): petroleum hydrocarbon solvent.

27. IS 2339 (1963): Aluminium paint for general purposes, indual container.

28. IS 5666 (1970): Etch (Pretreatment) Primer.

29. IS 5909 (1970): Alluminium & Alluminium Maganese Alloy Sheet & Strip for Aircraft Purpose.

30. IS 9954 (1981): Pictorial Surface Preparation Standards forPainting of Steel Surfaces.

31. Non-Destructive Testing, (2005), Abhay Kumar Gupta, IRICEN.

32. River Training and Protection Works for Railway Bridges, (2007), Ajay Goel, IRICEN.

33. Underwater Inspection of Bridges, (2005), A.K.Yadav, IRICEN.

♦ ♦ ♦

Published by :

INDIAN RAILWAYS INSTITUTE OF CIVIL ENGINEERING, PUNE

11-A, South Main Road, Koregaon Park, Pune - 411001.

Price ₹ 80