For official Use Only

सत्यमेव जयते

GOVERNMENT OF INDIA
MINISTRY OF RAILWAYS
(Railway Board)

INDIAN RAILWAY STANDARD

CODE OF PRACTICE FOR THE DESIGN OF SUB-STRUCTURES AND FOUNDATIONS OF BRIDGES

(BRIDGE SUB-STRUCTURES & FOUNDATION CODE)

ADOPTED –1936
FIRST REVISION -1985
SECOND REVISION -2013

(Incorporating Correction Slip Upto 29)

ISSUED BY

RESEARCH DESIGNS AND STANDARDS ORGANISATION
LUCKNOW - 226011

सत्यमेव जयते

GOVERNMENT OF INDIA
MINISTRY OF RAILWAYS
(Railway Board)

INDIAN RAILWAY STANDARD

CODE OF PRACTICE FOR THE DESIGN OF SUB-STRUCTURES AND FOUNDATIONS OF BRIDGES

(BRIDGE SUB-STRUCTURES & FOUNDATION CODE)

ADOPTED –1936
FIRST REVISION -1985
SECOND REVISION -2013

(Incorporating Correction Slip Upto 29)

ISSUED BY

RESEARCH DESIGNS AND STANDARDS ORGANISATION
LUCKNOW - 226011

CONTENTS

S.No.	Description	Page

APPENDICES :

TABLES:

–––––***–––––

INDIAN RAILWAY STANDARD CODE OF PRACTICE FOR THE DESIGN OF SUB-STRUCTURES AND FOUNDATIONS OF BRIDGES

(Bridge Sub-structure and Foundation Code)

1. SCOPE

1.1 This Code of Practice applies to the design and construction of substructures and foundations of Railway bridges including sub-structures in steel. Any revision or addition or deletion of the provisions of this code shall be issued only through the correction slip to this code. No cognizance shall be given to any policy directives issued through other means.

1.2 The structural design of sub-structures in steel shall be in accordance with the Indian Railway Standard (IRS) Code of Practice for the design of steel or wrought iron bridges carrying rail, road or pedestrian traffic (revised 1962) and the structural design of sub-structures and foundations in concrete shall be in accordance with the IRS Code of Practice for concrete bridges (revised 1962).

1.3 New bridge sub-structures shall be designed to the standards laid down in this code.

1.3.1 Checking the strength of the sub-structure of the existing bridges for introducing new type of locos/rolling stock or in case of gauge conversion works shall be as per the criteria laid down in Clause 5.16.

1.4 The design and construction of sub-structure and foundations of road bridges exclusively carrying road traffic shall comply with relevant sections of the Standard Specifications and Code of Practice for road bridges issued by the Indian Roads Congress.

1.5 This Code makes reference to the following Standards and Technical Papers.

I. INDIAN STANDARD SPECIFICATIONS

(a) IS : 269-1976-Specification for ordinary and low heat portland cement (Third revision).

(b) IS: 8041E-1978 –Emergency Specifications for rapid hardening portland cement.

(c) IS : 875-1964 Code of Practice for Structural Safety of Buildings-Loading Standards.

(d) IS : 1888-1971-Methods of load tests on soils.

(e) IS : 1892-1962-Code of Practice for site investigations for foundations.

(f) IS :1893-1975-Criteria for earth quake resistant design of structures.

(g) IS : 1911-1967-Schedule of unit weights of building materials.

(h) IS : 2720-Pt. XIII-1965- Direct Shear Test.

(i) IS : 2911-Code of Practice for design and construction of pile foundations (Parts I, II, III) (1964, 1965, 1973).

(j) IS : 2950-1973 Pt. I-Code of Practice for design and construction of raft foundations.

(k) IS : 3955-1967- Code of Practice for design and construction of well foundation.

(l) IS : 6403-1971-Code of Practice for determination of allowable bearing pressures on shallow foundation.

II. STANDARD SPECIFICATIONS AND CODE OF PRACTICES ISSUED BY INDIAN ROADS CONGRESS

IRC-5-1970 Section I - General features of design.

IRC-6-1966 Section II - Loads and Stresses.

III. TECHNICAL PAPERS:

(a) Railway Board Technical paper No.335- 'River training and control for Bridges' by H.K.L.Sethi.

(b) Railway Board Technical paper No.153 – 'River training and control on the guide bank system' by Sir F.J.E. Spring.

(c) Central Board of Irrigation and power- Publication No.60 'Manual on River Behaviour Control and Training (Revised Sept.1971).

(d) River Training and Protection Works for Railway Bridges published by **IRIATT**/Pune.

(e) Manual on the Design and Construction of well and pile Foundations.

(f) Hand Book for Estimation of Design Discharge for Railway Bridges.

HYDROLOGICAL DESIGN CONSIDERATIONS

2. TERMINOLOGY

2.1 AFFLUX (h) is the rise in water level up-stream of a bridge as a result of obstruction to natural flow caused by the construction of the bridge and its approaches.

2.2 CAUSEWAY or Irish bridge in a dip in the Railway track which allows floods to pass over it.

2.3 CLEARANCE(C) is the vertical distance between the water level of the design discharge (Q) including afflux and the point on the bridge super-structure where the clearance is required to be measured.

2.4 DEPTH OF SCOUR(D) is the depth of the eroded bed of the river, measured from the water level for the discharge considered.

2.5 DESIGN DISCHARGE(Q) is the estimated discharge for the design of the bridge and its appurtenances.

2.6 DESIGN DISCHARGE FOR FOUNDATIONS (Qf) is the estimated discharge for design of foundations and training/ protection work.

2.7 FREE BOARD(F) is the vertical distance between the water level corresponding to the Design Discharge (Q) including afflux and the formation level of the approach banks or the top level of guide banks.

2.8 FULL SUPPLY LEVEL (FSL) in the case of canals, is the water level corresponding to the full supply as designed by canal authorities.

2.9 HIGHEST FLOOD LEVEL (HFL) is the highest water level known to have occurred.

2.10 LOW WATER LEVEL (LWL) is the water level generally obtained during dry weather. Low water level is determined from gauge levels of the river for the period as large as possible from the consideration of obtaining the longest possible working period.

2.11 IMPORTANT BRIDGES are those having a lineal waterway of 300m or a total waterway of 1000 Sq.m or more and those classified as important by the Chief Engineer/ Chief Bridge Engineer, depending on considerations such as depth of waterway, extent of river training works and maintenance problems.

2.12 MAJOR BRIDGES are those which have either a total waterway of 18m or more or which have a clear opening of 12m or more in any one span.

2.13 PROTECTION WORKS are works to protect the bridge and its approaches from damage by flood water.

2.14 TRAINING WORKS are works designed to guide and confine the flow of a river.

2.15 TRACK CROSSING AND BRIDGES - Any opening across the track formation for discharge of water, vehicles, men or for similar purposes should be considered as bridge. All conduits provided across track for the passage of cables, pressurized or non pressurized fluids should be considered a track crossings and not bridges. Details and system of annual assessment and documentation of health of such track crossings should be maintained.

3. NOTATION AND SYMBOLS

For the purpose of this Code, unless otherwise stated in the text, the following letters/symbols shall have the meaning indicated against each- Symbols are also explained at the appropriate place in the code.

A - Un-obstructed sectional area of river.

a - Sectional area of river at obstructions

B - Width of uniform distribution at formation level.

C - Coefficient for Lacey's regime width or Half of un-confined compressive strength of soil.

- Clearance.

C_o- Compression index.

D - Lacey's depth of scour.

E - Thickness of clay layer.

e_o- Initial void ratio.

F - Free Board or Total Horizontal force due to hydro-dynamic force and earthquake force.

f- Lacey's silt factor.

F_r- Modulus of rupture of masonry/ mass concrete.

F_y - Yield strength of steel.

H,h- Height of retaining wall or afflux.

K_a - Coefficient of static active earth pressure condition.

K_p - Coefficient of static passive earth pressure.

L - Length of abutment.

P - Total horizontal pressure due to water current or pressure due to Dead Load and Live Load surcharge.

P_a - Active earth pressure per unit length of wall or active earth pressure due to seismic effects.

P_o - Initial overburden pressure.

P_s - Percentage of steel area on each of masonry / mass concrete.

P_1 - Pressure due to Live load and Dead load surcharge on return walls.

P_P - Passive earth pressure per unit length of wall.

P_W - Wetted perimeter in metres which can be taken as effective width of waterway in case of large streams.

Δp- Increase in stress due to external loads at any depth below the formation.

Q - Design discharge.

Q_f - Design discharge for foundations.

q_r - Uniform surcharge intensity.

q_f - Discharge intensity.

S - Vertical surcharge load or anticipated settlement.

V - Velocity in unobstructed stream or Maximum mean velocity of current.

W - Unit weight of soil.

W_e- Weight of water of the enveloping cylinder.

W_s - Saturated unit weight of soil.

α_h - Design horizontal seismic coefficient.

α_v - Vertical seismic coefficient.

δ - Angle of friction between the wall material and earthfill.

ϕ - Angle of internal friction of back fill soil.

i - Angle which the earth fill makes with the horizontal in earth retaining structure

4. HYDROLOGICAL DESIGN INVESTIGATIONS

4.1 Hydrological investigations to the extent necessary, depending upon the type and importance of the bridge shall be carried out as per guide lines given in Appendix I.

4.2 ESTIMATION OF DESIGN DISCHARGE(Q)

4.2.1 The estimation of design discharge for waterway shall preferably be based, wherever possible, on procedures evolved from actual hydrometeorological observations of the same or similar catchments.

4.2.2 All bridges shall be designed with adequate waterway for design discharge (Q). This shall normally be the computed flood with a probable recurrence interval of 50 years. However, at the discretion of Chief Engineer/ Chief Bridge Engineer, bridges, damage to which is likely to have severe consequences may be designed for floods with a probable recurrence interval of more than 50 years, while bridges on less important lines or sidings may be designed for floods with a probable recurrence interval of less than 50 years.

4.3 METHODS OF ESTIMATION OF DESIGN DISCHARGE

4.3.1 Where stream flow records (yearly peak discharges) are available for the desired recurrence interval or more, the design discharge shall be the computed flood for the desired recurrence interval.

4.3.2 Where such records exist for less than the desired recurrence interval, but are of sufficient length to permit reliable statistical analysis, the design discharge may be computed statistically for the desired recurrence interval.

4.3.3 Where records of floods are not of sufficient length to permit reliable statistical analysis but where rainfall pattern and intensity records are available for sufficient length of time and where it is possible to carry out at least limited observations of rainfall and discharge, unit hydrographs based on such observations may be developed and design discharge of the desired recurrence interval computed by applying appropriate design storm.

4.3.4 Where such observations, as mentioned in Cl. 4.3.3 above, are not possible, a synthetic unit hydrograph may be developed for medium size catchment (i.e. area 25 sq km or more but less than 2500 sq km) by utilising established relationships as mentioned in Flood Estimation Report for respective hydro-meteorological sub-zone, listed under Appendix-V(i). Subsequently, design discharge may be computed in the manner, as mentioned in Cl. 4.3.3 above.Various hydro-meteorological sub-zones, are shown in Appendix-V(ii). For small size catchment (less than 25 sq.km), design discharge may be estimated using the techniques described in RDSO report no.RBF-16, titled as "Flood Estimation Methods for Catchments Less Than 25 Km^2 in Area".

4.3.5 Where feasible, gauging of the stream may be done to establish the stage – discharge relationships and the discharge at known HFL determined. Otherwise, the discharge may be estimated by slope area method after obtaining flood slope by field observations.

4.4 DESIGN DISCHARGE FOR FOUNDATIONS(Q_f)

To provide for an adequate margin of safety against an abnormal flood of magnitude higher than the design discharge (Q) the foundations, protection works and training works except free board, shall be designed for a higher flood discharge. The magnitude of this discharge shall be computed by increasing the design discharge (Q) estimated according to Clause 4.2, by the percentage indicated below

Catchment up to 500 Sq.km	30%
Catchment more than 500 Sq.km and upto 5,000 Sq.km.	30% to 20% (decreasing with increase in area)
Catchment more than 5,000 Sq.km. and upto 25,000 Sq.km.	20% to 10% (decreasing with increase in area)
Catchment more than 25,000 Sq.km	Less than 10% (at the discretion of the Chief Bridge Engineer).

.

4.5 DESIGN OF WATERWAYS

4.5.1 In the case of a river which flows between stable high banks and which has the whole of the bank-to-bank width functioning actively in a flood of magnitude Q the waterway provided shall be practically equal to the width of the waterspread between the stable banks for such discharge. If, however, a river spills over its banks and the depth of spill is appreciable the waterway shall be suitably increased beyond the bank-to-bank width in order to carry the spill discharge as well.

4.5.2 In the case of a river having a comparatively wide and shallow section, with the active channel in flood confined only to a portion

of the full width from bank to bank, constriction of the natural waterway would normally be desirable from both hydraulic and cost considerations. A thorough study of both these factors shall be made before determining the waterway for such a bridge.

4.5.3 For river with alluvial beds and sustained floods the waterway shall normally be equal to the width given by Lacey's formula :

$$P_w = 1.811\ C\sqrt{Q}$$

Where, P_w = wetted perimeter in metres which can be taken as the effective width of waterway in case of large streams.

Q = design discharge in cum/sec.

C = a Coefficient normally equal to 2.67, but which may vary from 2.5 to 3.5 according to local conditions depending upon bed slope and bed material.

4.5.4 If the river is of a flashy nature i.e. the rise and fall of flood is sudden or the bed material is not alluvial and does not submit readily to the scouring effect of the flood, Lacey's regime width formula as given in clause 4.5.3 above will not apply.

4.5.5 In the case of rivers in sub-montane stage where the bed slopes are steep and the bed material may range from heavy boulders to gravel, it is not possible to lay down rigid rules regarding constriction of waterway. Any constriction, in such cases, shall be governed largely by the configuration of the active channel or channels, the cost involved in diversion and training of these channels, and the cost of guide bunds, which will need much heavier protection than the guide bunds of alluvial rivers. Each case shall be examined on merits from both hydraulic and economic considerations and the best possible solution chosen.

4.5.6 In the case of a bridge having one or more piers, the width of waterway obtained from procedure outlined in clause 4.5.3 to 4.5.5 above shall be increased by twice the sum of the weighted mean submerged width of all the piers including footings for wells to arrive at the total width of waterway to be provided between the ends of the bridge; where such increase is not made, the same shall be applied as a deduction from the total width of waterway actually provided to arrive at the effective width.

4.5.6.1 If the width of the pier is b_1 for a height h_1 and b_2 for a height h_2 in the submerged portion of the pier having a total height h_1+h_2, the weighted mean submerged width is given by the expression:

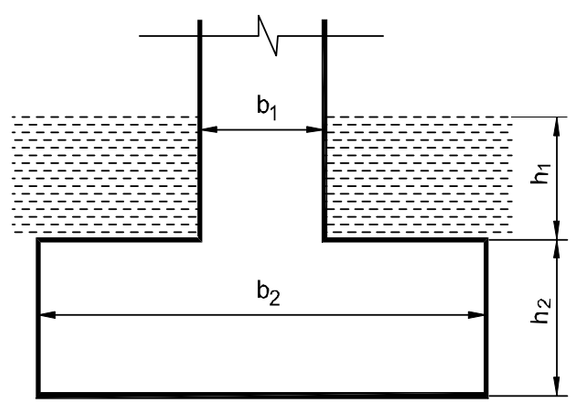

$$b\ \text{mean} = \frac{h_1 b_1 + h_2 b_2}{h_1 + h_2}$$

4.5.7 For gauge conversion and doubling works, where there is no history of past incidents of over-flow/washout/excessive scour etc. during last 50 years, the waterway of existing bridge may be retained after taking measures for safety as considered necessary by Chief Engineer Incharge. For locations where

there is history of past incidents of over-flow/ washout/excessive scour, the waterway has to be re-assessed based on the freshly estimated design discharge using clause 4.3.1 to 4.3.4. For locations, where existing bridges are less than 50 years old and there is no past history of incidents of over flow/washout/excessive scour etc., the water way may be judiciously decided after calculation of the design discharge and keeping in view the water way of existing, bridges on adjacent locations on the same river.

4.5.8 For rebuilding of bridge, waterway shall be determined keeping in view the design discharge as worked out from clause 4.3.

4.5.9 For strengthening existing bridges by jacketing etc., a reduction in waterway area as per the limits specified below may be allowed by the Chief Bridge Engineer provided that there has been no history of past incidents of overflow/ washout/ excessive scour etc. and that measures for safety as considered necessary by the Field Engineer and approved by CBE are taken.

S. No.	Span of Bridge	Reduction in waterway area allowed as %age of existing waterway
1	Upto and including 3.05m	20%
2	3.05m to 9.12m including	Varying linearly from 20% to 10%
3	Greater than 9.12m	10%

Further reduction in the area shall be subject to CRS sanction and submission of detailed calculation of waterways etc. Where the clearances are not available, the bridge should be rebuilt.

4.6 DEPTH OF SCOUR

4.6.1 The probable maximum depth of scour for design of foundations and training and protection works shall be estimated considering local conditions.

4.6.2 Wherever possible and especially for flashy rivers and those with beds of gravel or boulders, soundings for purpose of determining the depth of scour shall be taken in the vicinity of the site proposed for the bridge. Such soundings are best taken during or immediately after a flood before the scour holes have had time to silt up appreciably. In calculating design depth of scour, allowance shall be made in the observed depth for increased scour resulting from:

(i) The design discharge being greater than the flood discharge observed.

(ii) The increase in velocity due to the constriction of waterway caused by construction of the bridge.

(iii) The increase in scour in the proximity of piers and abutments.

4.6.3 In the case of natural channels flowing in alluvial beds where the width of waterway provided is not less than Lacey's regime width, the normal depth or Scour (D) below the foundation design discharge (Q_f) level may be estimated from Lacey's formula as indicated below

$$D = 0.473 \left(\frac{Q_f}{f}\right)^{1/3}$$

where D is depth in metres Q_f is in cumecs and 'f' is Lacey's silt factor for representative sample of bed material obtained from scour zone.

4.6.4 Where due to constriction of waterway, the width is less than Lacey's regime width for Q or where it is narrow and deep as in the case of incised rivers and has sandy bed, the normal depth of scour may be estimated by the following formula:

$$D = 1.338 \left(\frac{q_f^2}{f}\right)^{1/3}$$

Where 'q_f' is the discharge intensity in cubic metre per second per metre width and 'f' is silt factor as defined in clause 4.6.3.

Graph relating q_f and D for different values of ' f ' are also given at Fig.1 for ease of reference.

4.6.5 The silt factor 'f' shall be determined for representative samples of bed material collected from scour zone using the formula :

$$f = 1.76\sqrt{m}$$

where m is weighted mean diameter of the bed material particles in mm.

Values of 'f' for different types of bed material commonly met with are given below :

Type of bed material	Weighted mean dia of particle (mm)	Value of 'f'
(i) Coarse silt	0.04	0.35
(ii) Fine sand	0.08 0.15	0.50 0.68
(iii) Medium sand	0.3 0.5	0.96 1.24
(iv) Coarse sand	0.7 1.0 2.0	1.47 1.76 2.49

4.6.6 The depth calculated (vide clause 4.6.3 and 4.6.4 above) shall be increased as indicated below, to obtain maximum depth of scour for design of foundations, protection works and training works :-

Nature of the river	Depth of scour
In a straight reach	1.25D
At the moderate bend conditions e.g. along apron of guide bund.	1.5D
At a severe bend	1.75D
At a right angle bend or at nose of piers.	2.0D
In severe swirls e.g. against mole head of a guide bund.	2.5 to 2.75D

4.6.7 In case of clayey beds, wherever possible, maximum depth of scour shall be assessed from actual observations.

4.7 AFFLUX (h)

4.7.1 For streams with non-erodible beds, the afflux may be worked out by Molesworth formula given below :-

$$h = \left[\frac{V^2}{17.88} + 0.01524\right] \times \left[\left(\frac{A}{a}\right)^2 - 1\right]$$

Where,

h = Afflux in metres.

V = Velocity in un-obstructed stream in metre per second.

A = Un-obstructed sectional area of the river in square metres.

a = Sectional area of the river at obstruction in square metres.

4.7.2 In case of rivers with erodible beds, full afflux as calculated by the formula may not occur.

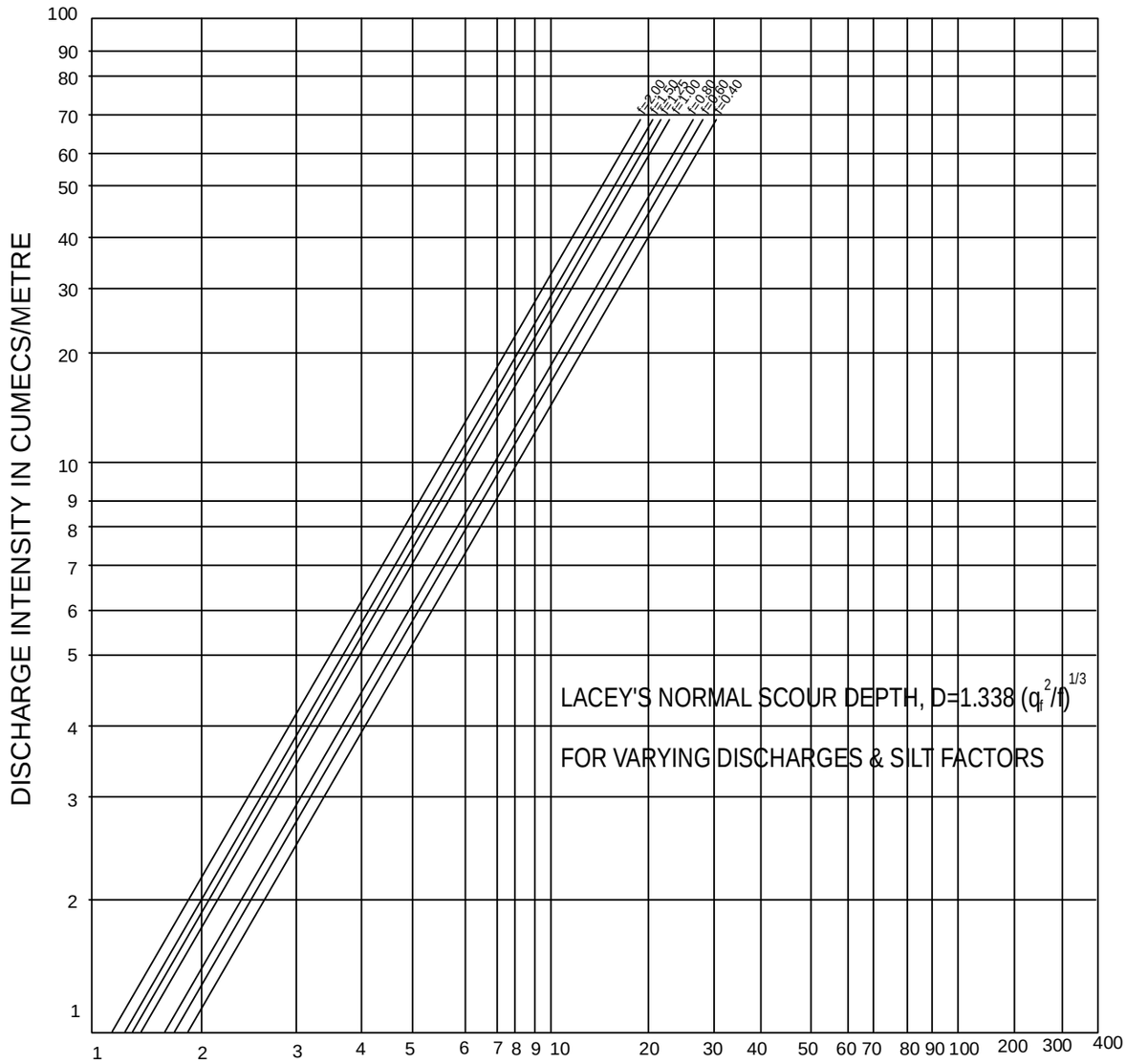

LACEY'S NORMAL SCOUR DEPTH IN METRES
GRAPH RELATING 'q_f' & 'D' FOR DIFFERENT VALUES OF ' f '

Fig.1

4.8 CLEARANCE (C)

4.8.1 The minimum clearance for bridges excluding arch bridges, syphons, pipe culverts and box culverts from the water level of design discharge (Q) shall be in accordance with Table below :

Discharge in cumecs	Vertical clearance (mm)
0-30	600
31-300	600-1200(Pro-rata)
301-3000	1500
Above 3000	1800

4.8.2 In the case of arch bridges, minimum clearance measured to the crown of the intrados of the arch shall be as under :

Span of arch	Clearance
Less than 4m	Rise or 1200mm whichever is more.
4.0m to 7.0m	2/3 rise or 1500mm whichever is more.
7.1m to 20.0m	2/3 rise or 1800mm whichever is more.
Above 20.0m	2/3 rise.

4.8.3 When rebuilding bridges on existing lines or building new bridges on these or new lines, the clearance can be relaxed to the limits shown below provided :

(i) Adoption of the prescribed values would otherwise result in heavy expenditure and/ or serious difficulties in construction, and

(ii) The clearance can be safely reduced, from those stipulated under clause 4.8.1.

Discharge (cumecs)	Clearance (mm)
Less than 3	300
3 to 30	300-400(Pro-rata)
31 to 300	400-1200(Pro-rata)

The powers to relax prescribed clearance in special circumstances as indicated above shall be personally exercised by the Principal Chief Engineer/Chief Bridge Engineer, due consideration being given to past history of the bridge while doing so.

4.8.4 While executing works other than rebuilding a bridge, the existing clearance may be retained.

4.8.5 Where a tendency has been observed for the bed level of the stream to rise, a clearance shall be provided taking this factor into account.

4.9 FREE BOARD (F)

4.9.1. The free-board from the water level of the design discharge (Q) to the formation level of the Railway embankment or the top of guide bund shall not be less than 1m. In cases where heavy wave action is expected, the free-board shall be increased suitably.

4.9.2. In special circumstances, where the free-board can be safely reduced and where adoption of the prescribed values would result in heavy expenditure and/or serious difficulties

in construction, the free-board may be relaxed at the discretion of the Principal Chief Engineer/ Chief Bridge Engineer as indicated below :-

Discharge (cumecs)	Minimum free-board (mm)
Less than 3.	600
3 to 30	750
More than 30	No relaxation is permissible.

4.9.3 While executing works other than rebuilding a bridge or extending it for doubling purposes, the existing freeboard may be retained after taking measures for safety as considered necessary by Chief Engineers.

4.9.4 However, in case of siphon bridges, the provision for free board as per Clause 4.9.1 need not be considered where a spillway is provided on one bank of the channel at a suitable point upstream within or outside the Railway Boundary so that as and when the channel rises over the danger mark, the water from the channel will flow out. A small drain also has to be provided from the point of spillway to the nearest bridge to lead the water from the channel in case of overflow from the spillway.

4.10 TRAINING WORKS

These works are required to guide the flow past the bridge without causing damage to the structure and its approaches. These may consist of guide bunds and/or spurs. The design of such works will depend on the condition obtained at each site. Model studies can be carried out with advantage in important cases.

5. LOADS, FORCES AND STRESSES

5.1 GENERAL

For the purpose of computing stresses and stability of sub-structures and foundations of bridges, loads and effects of forces in accordance with the provisions of the Bridge Rules (Revised 1964 and Reprinted 2008) read together with amendments shall be considered and subject to such additions and amplifications as specified in this Code.

Subject to the provisions of other clauses, all loads and forces shall be considered as applied and all loaded lengths chosen in such a way that the most adverse effect is caused in the elements of the sub-structure under consideration.

Force due to the gradient effect shall also be taken into consideration, while designing sub-structures and superstructures as a horizontal force of magnitude equal to the product of total load and gradient.

5.2 DEAD LOAD (DL)

For the purpose of calculations of the dead load, the unit weights of different materials shall be taken as provided in IS : 1911 “Schedule of Unit Weights of building materials”.

5.3 LIVE LOAD (LL)

The live load for design of bridge sub-structure and foundation shall be as specified in the Bridge Rules, subject to such addition and amplifications as stated below :-

(a) The relevant standard of Railway Loading shall be considered for new construction or rehabilitation/ strengthening/ rebuilding of

bridges as specified in IRS Bridge Rules unless otherwise specified.

(b) For simply supported spans, the live load reaction on an abutment of the gravity type, shall be taken as half of the total equivalent uniformly distributed load (EUDL) for shear on the overall length of the span. In the case of abutments of other than gravity type, the minimum vertical live load reaction corresponding to the axle load position which develops the maximum longitudinal force, shall be considered.

(c) For simply supported spans, the live load reaction on a pier shall be worked out under the following conditions:

(i) When only one span is fully loaded, and

(ii) When both spans are fully loaded.

The live load reaction on a pier of gravity type for the "one span loaded condition" shall be taken as half of the total EUDL for shear on the overall length of the span. For the "both spans loaded" condition where the spans are equal, the live load reaction shall be taken as one half of the EUDL for bending moment on a span equal to the distance between the outer most ends of the two spans under consideration.

In the case of piers of the gravity type supporting two unequal spans or continuous spans, and also in the case of piers other than of the gravity type the live load reaction for each span shall be calculated for the appropriate axle loads in the positions which give the maximum longitudinal forces on the loaded length.

(d) In the case of well foundations, for calculating foundation pressure, only such proportion of live load which exceeds 15% of the dead load after deducting buoyancy need be taken into account.

5.4 DYNAMIC AUGMENT

(a) For calculating the pressure on the top surface of the bed block, the live load shall be incremented by the appropriate Dynamic augment specified in the Bridge Rules.

(b) For the design of gravity type substructure, the dynamic augment specified in Cl.5.4 (a) above shall be multiplied by a factor as under :

(i)	For calculating the reaction at the bottom surface of bed block	0.5
(ii)	For calculating the pressure on top 3m of substructure below the bed block	0.5 decreasing uniformly to zero
(iii)	Beyond a depth of 3m below the bed block, no impact need be allowed -	

(c) For design of non gravity type Substructure, full dynamic augment effect as specified in Cl.5.4(a) above shall be considered upto scour level.

(d) In a slab top culvert, where no bed block is provided and the slab rests directly on the pier or abutment, the top 300mm of Substructure below the bottom of the slab shall be considered as bed- block.

(e) The dynamic augment for the design of ballast walls upto a depth of 1.5m, shall be assumed to be 0.5. For the remaining portion of ballast wall, no dynamic augment need be allowed.

5.5 LONGITUDINAL FORCES (LF)

Where a bridge carries a railway or roadway, provision shall be made for the stresses in the piers and abutments for longitudinal forces as specified in Bridge Rules. In design calculations, it should be determined which of these forces are applicable for the condition of loading under consideration.

Temperature effects (TMP) need not be considered in the design of sub structures and foundation of bridges if a super structure is free to expand or contract.

5.6 FRICTIONAL RESISTANCE

5.6.1 Frictional resistance of RC/PSC slabs kept on un-yielding piers/abutments without bearings shall be limited to frictional coefficient times the reaction due to dead load on the pier or abutment. This frictional coefficient shall be as follows :

a) For concrete over concrete with bitumen layer in between = 0.5

b) For concrete over concrete not intentionally roughened = 0.6

5.6.2 Frictional resistance of expansion bearings shall be taken into account in accordance with clause 2.7 of the Bridge Rules and shall be equal to the total vertical reaction due to dead load and the live load multiplied by appropriate values of frictional coefficient as given in clause 2.7.1 of the Bridge Rules.

5.7 EARTH PRESSURE (EP)

5.7.1 All earth retaining structures shall be designed for the active pressure due to earth fill behind the structure. The general condition encountered is illustrated in (Fig.2)

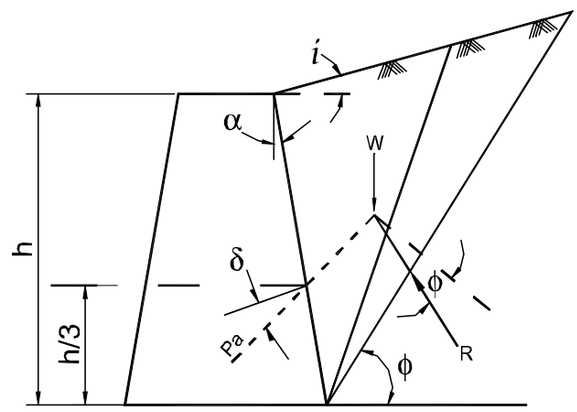

Fig -2

The active pressure due to earth fill shall be calculated by the formula, based on Coulomb's theory for active earth pressure given below:-

P_a = ½ $Wh^2 K_a$ where :-

P_a = Active earth pressure per unit length of wall.

W = Unit weight of soil.

h = height of wall.

ϕ = angle of internal friction of back fill soil.

δ = angle of friction between wall and earth fill where value of δ is not determined by actual tests, the following values may be assumed.

(i) δ = 1/3 ϕ for concrete structures.

(ii) δ = 2/3 ϕ for masonry structures.

i = angle which the earth sirface makes with horizontal behind the earth retaining structure.

$\propto$ = angle which the back surface of earth retaining structure makes with vertical.

K_a = Coefficient of static active earth pressure condition.

$$K_a = \frac{\cos^2(\phi-\alpha)}{\cos^2\alpha\cos(\alpha+\delta)\left[1+\sqrt{\frac{\sin(\phi+\delta)\sin(\phi-i)}{\cos(\alpha+\delta)\cos(\alpha-i)}}\right]^2}$$

5.7.1.1 The point of application of the active earth pressure due to earth fill shall be assumed to be at a point on the earth face of the structure at a height of h/3 above the section where stresses are being investigated.

5.7.1.2 The direction of the active earth pressure shall be assumed to be inclined at an angle δ to the normal to the back face of the structure.

5.7.1.3 The magnitude of active earth pressure can also be determined graphically by well known graphical constructions such as Rebhann's or Culmann's construction particularly in case of wing walls, where the profile of earthwork to be supported is not easily susceptible to analysis. (Fig.3)

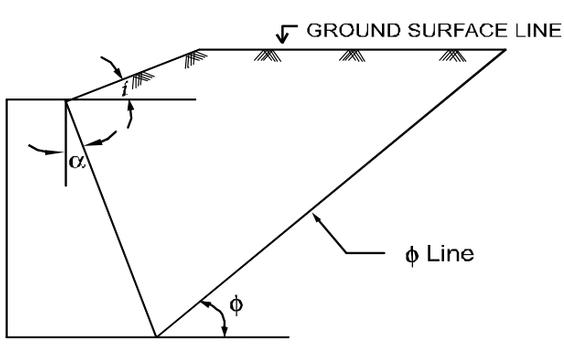

5.7.1.4 These formulae for active earth pressures are based on the supposition that backfill behind the structure is granular and there is effective drainage. These conditions shall be ensured by providing filter media and backfill behind the structure as shown in Fig.2 and as described in clause 5.7.1 and 5.7.2

5.7.1.5 In testing the stability of section of abutments below the ground level, 1/3rd of the passive pressure of the earth in front of the abutment may be allowed for upto the level below which the soil is not likely to be scoured.

5.7.1.6 The passive pressure P_p due to the soil shall be calculated in accordance with the formula :

$$P_p = \frac{1}{2} Wh^2 K_P$$

Where,

P_p = Passive earth pressure per unit length of wall

W = Unit weight of soil

h = height from the base of the wall to the top surface of the soil.

K_P = Coefficient of static passive earth pressure.

$$K_P = \frac{\cos^2(\phi+\alpha)}{\cos^2\alpha\cos(\alpha-\delta)\left[1-\sqrt{\frac{\sin(\phi+\delta)\sin(\phi+i)}{\cos(\alpha-\delta)\cos(\alpha-i)}}\right]^2}$$

(i) The point of application of passive earth pressure due to earth fill shall be assumed to be at a point on the front face of the abutment at a height of h/3 above the level where stability is being tested.

(ii) The direction of passive earth pressure shall be assumed to be upwards and inclined at an angle δ to normal to front face of the abutment.

5.7.1.7 Angle of Internal friction of soil.

Abutments, wing walls and return walls shall be designed adopting suitable values for angle of internal friction appropriate for the material used in the backfill, determined, where possible, by testing soil samples as per IS : 2720-Pt (XIII).

5.7.1.8 Where such tests are not done, values of ϕ for granular soil may be assumed as given in Table -1.

TABLE 1

Material	Loose state	Dense State
(a)Sand Coarse	33 Degrees	45 Degrees
(b) Sandy gravel	35 "	45 "
(c) Silty and fine sand	30 "	35 "

5.7.2 Semi-empirical methods of calculating earth pressure.

Where assumptions applicable to theoretical formulae as given in para 5.7.1.4 are not satisfied or where it is not practicable to follow the theoretical Method, the semi-empirical method described here under may be adopted in the case of new structures provided the height of the structure from foundation to top of fill does not exceed 6 m. The method may also be used for checking existing sub-structures in which case the limitation of height may be ignored. Soil types 'a' to 'e' in Fig 4 and Table 2 are as described below :

Soil Type **Description**

(a) Coarse grained soil without admixture of fine soil particles very permeable (clean sand or gravel).

(b) Coarse grained soil of low permeability due to admixture of particles of silt size.

(c) Residual soil with stones, fine silty sand and granular materials with conspicuous clay content.

(d) Very soft or soft clay, organic silts or silty clays.

(e) Medium or stiff clay, deposited in chunks and protected in such a way that a negligible amount of water enters the spaces between the chunks during floods or heavy rains. If this condition cannot be satisfied the clay should not be used as back fill material. With increasing stiffness of the clay, danger to the wall due to infiltration of water increases rapidly.

NOTE : For new bridges, back fill of type ‘c’ soil with excessive clay content or soil of type ‘d’ and ‘e’ shall not be used.

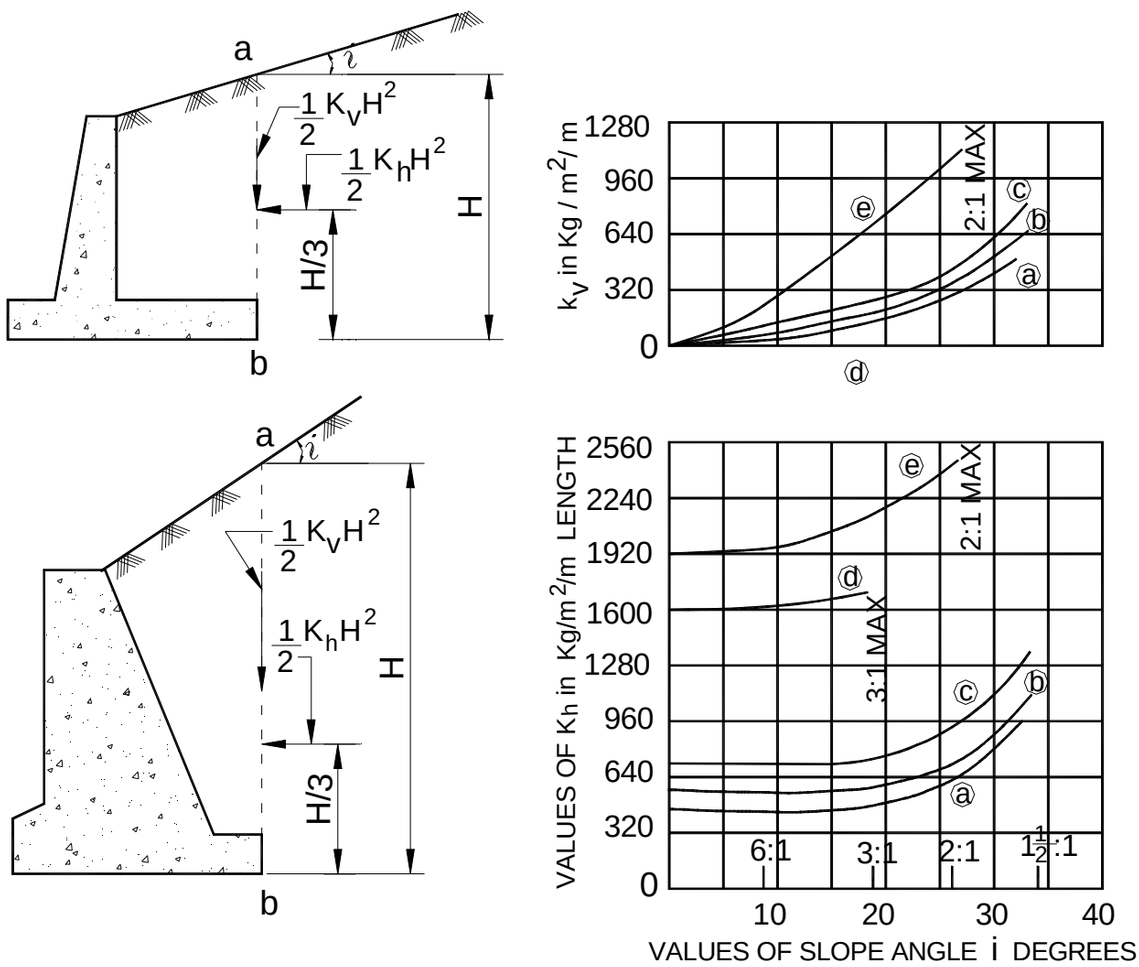

Fig.4 Chart for estimating pressure of backfill against retaining walls supporting backfills with plane surface

Note : Alphabets on curves indicate soil types as described in clause 5.7.2. For materials of type (e) computations of pressure will be based on value of H-4 feet less than the actual value.

The active earth pressure is given by the formula $P_a = \frac{1}{2} K_h H^2$ assuming the surface of backfill is plain where Kh for each of the classification is obtained from Fig. 4 or from Table 2.

TABLE 2

Value of K_h for different types of soils & angles of inclination of backfill (clause 5.7.2)

Type of soil	i=0	6:1 $0^0 29'$	3:1 18^0 25'	2:1 $26^0 34'$	1½:1 $33^0 40'$
a	4609 (470)	4471 (456)	4707 (480)	5962 (608)	8786 (896)
b	6178 (630)	5805 (592)	6276 (640)	7649 (780)	10787 (1100)
c	7355 (750)	7511 (766)	8090 (825)	9571 (976)	13494 (1376)
d	15690 (1600)	16186 (1648)	17893 (1824)	---	---
e	18828 (1920)	20306 (2070)	21189 (2160)	---	---

Note : 'K_h' is in N/m^2(kg/m^2)/lineal metre

The height H is the height of the vertical section passing through the heel of the wall. For material of type 'a' computation of pressure may be based on value of H which should be 1.2 m less than actual value.

5.7.3. Where the substructure is founded on compressible soft clay, the computed value of active earth pressure may be increased by 50% for all soils except type (d).

5.8 EARTH PRESSURE DUE TO SURCHARGE

5.8.1 Earth pressure due to surcharge on account of live load and dead loads (i.e. track, ballast etc.) shall be considered as equivalent to loads placed at formation level and extending upto the front face of ballast wall.

The surcharge due to live loads for the different standards of loading is indicated in Table-3.

TABLE-3

Standard of loading	Surcharge,S (Kg/m)	Width of uniform distribution at formation Level, B (m)
DFC Loading (32.5t axle load)	16,300	3.0
25t Loading-2008	13,700	3.0
HM Loading - 1995	15,800	3.0
Modified BG-1987	13,700	3.0
Modified MG-1988	9,800	2.1
MGML	9,800	2.1
NG'A' Class	8,300	1.8

5.8.2 Earth Pressure Due To Surcharge On Abutments

The horizontal active earth pressure P due to surcharge, dead and live loads per unit length on abutment will be worked out for the following two cases.

Case-1 : When depth of the section h is less than (L-B).

Case-2 : When depth of the section h is more than (L-B) .

Where :

L= Length of the abutment;

B= Width of uniform distribution of surcharge load at formation level; and

h= Depth of the section below formation level.

Case-1 : h $\leq$ (L-B)

The active earth pressure diagrams are as under :

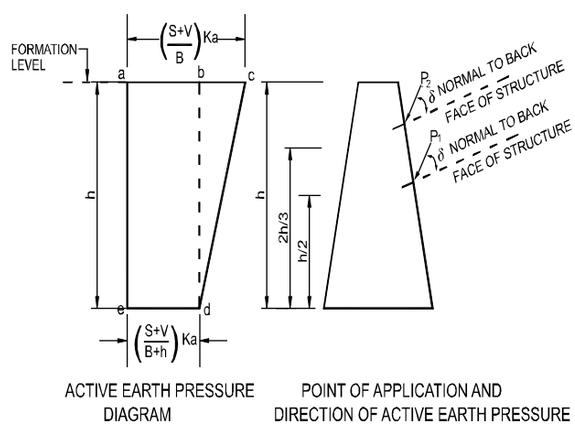

Whereas -

S = Live load surcharge per unit length

V = Dead load surcharge per unit length

P_1 =Force due to active earth pressure on 'abde'

P_2 = Force due to active earth pressure on 'bcd'.

$P_1 = \frac{(S+V)}{(B+h)} h.k_a$, acting at $\frac{h}{2}$ from section under consideration

$P_2 = \frac{(S+V)h^2 K_a}{2B(B+h)}$, acting at $\frac{2h}{3}$ from section under consideration.

Case-2 : h >(L-B)

The active earth pressure diagrams are as under :

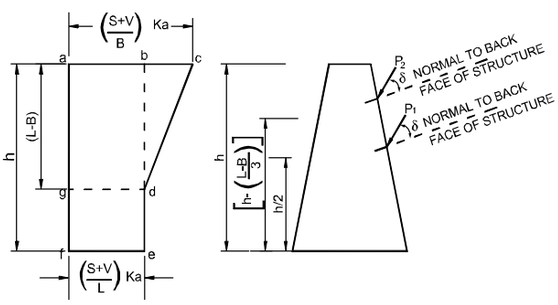

ACTIVE EARTH PRESSURE DIAGRAM

POINT OF APPLICATION AND DIRECTION OF ACTIVE EARTH PRESSURE

P_1 = Force due to active earth pressure on ''abdefg''

P_2 = Force due to active earth pressure on "bcd"

$P_1 = \frac{(S+V)}{L} K_a h$

acting at $\frac{h}{2}$ from section under consideration

$P_2 = \frac{(S+V)(L-B)^2 K_a}{2BL}$ acting at

$\left[h - \left(\frac{L-B}{3}\right)\right]$ from section under consideration.

Where,

S = Live load surcharge for unit length

V = Dead load surcharge for unit length.

h = Height of fill.

This is assumed to act at a height of h/2 from base of the section under consideration. Surcharge due to live load and dead load may be assumed to extend upto the front face of the ballast wall.

5.8.3 Earth Pressure due to Surcharge on Return Walls : The earth pressure due to surcharge on return walls of BOX type abutments may be assumed to be dispersed below the formation level at a slope of one horizontal to one vertical. The pressure due to live load and dead load surcharge shall be calculated by the formula:

$$\mathbf{P_1} = \frac{(S+V)h_1 K_a}{(B+2D)}$$

This pressure will be assumed to be acting at a distance of $h_1/2$ above the section considered as shown in Fig.5(a)

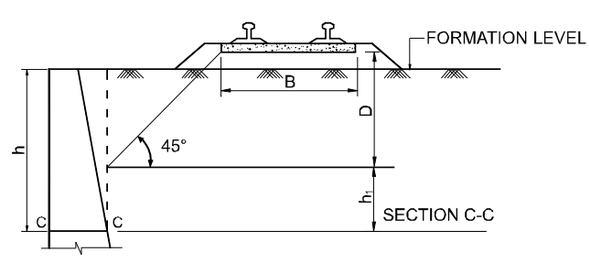

Fig 5(a)

5.8.4 Earth Pressure due to Surcharge on Wing Walls :

The wing walls are subject to the sloping surcharge due to the fill. In such cases, 'h' should be measured from the point at the extreme rear of the wall at the base to point on the surcharge line vertically above the former as shown in Fig 5(b) and horizontal earth pressure P_2 may be worked out as follows :-

$$P_2 = \frac{1}{2} Wh(h+2h_3) K_a$$

Where,

h_3 = 1/3 Cot ϕ tan α h

α = Angle of earth surcharge with the horizontal

ϕ = Angle of internal friction of the backfill soil.

W = Weight of backfill per cubic metre.

Portions of a wing wall which fall within the 45^0 distribution of surcharge as illustrated in Fig. 5(a) shall be designed to carry an additional earth pressure due to surcharge in accordance with the formula given in Clause 5.8.3.

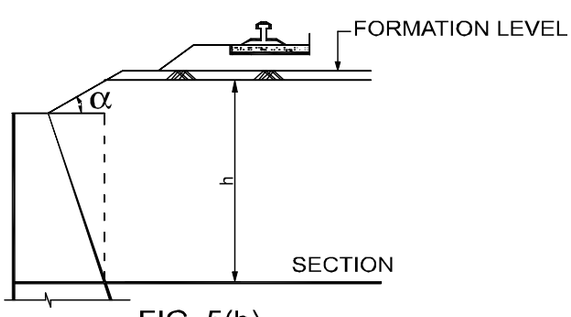

FIG. 5(b)

5.8.5 Where semi empirical methods are used to determine the earth pressure, the effect due to surcharge shall be computed by the formula given in Clauses 5.8.2 to 5.8.4 above, assuming values of K_a as given below :-

Type of Soil	K_a
a	0.27
b	0.30
c	0.39
d	1.00

5.9. FORCES DUE TO WATER CURRENT (WC)

5.9.1. Any part of the bridge substructure which may be submerged in running water shall be designed to withstand safely the horizontal pressure due to force of water current. The water pressure shall be estimated as indicated in Clause 5.9.2

5.9.2. The total water pressure shall be estimated as given in clauses 5.9.2.1 to 5.9.2.7.

5.9.2.1 On piers parallel to the direction of water current the water pressure shall be calculated by the formula :

$$P = KAV^2,$$

where,

P = Total pressure in kg due to water current.

A = Area in square metres of elevation of the part exposed to the water current.

V = The maximum mean velocity of current in metre per second

K = A constant having values for different shapes of piers as given in Clause 5.9.2.2.

TABLE 4

S.No	Description	Figure	Value of K
1.	Square-ended piers.	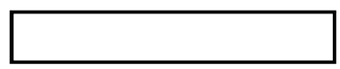	79
2.	Circular piers or piers with semi-circular ends.	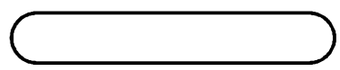	35
3.	Piers with triangular cut-and ease-waters, the angle included between the faces being 60 degrees.		37
4.	Piers with triangular cut-and ease-waters, the angle included between the faces being 90 degrees.	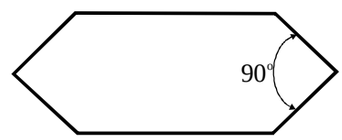	47
5.	Piers with cut-and ease- waters of equilateral arcs of circle at 60 degrees.	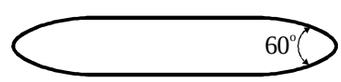	24
6.	Piers with arcs of the cut and ease waters intersecting at 90 degrees.	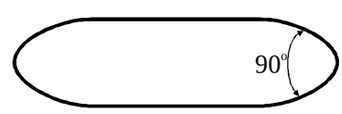	26

5.9.2.1.1 Maximum mean velocity of current (V) may be taken from past record, if available.

5.9.2.1.2 Where past record is not available and bridge is constructed across river in alluvial bed, velocity of current may be estimated by using following formula:

$$V = \left(\frac{Q_f^{\,2}}{140}\right)^{\frac{1}{6}} \frac{\text{Width of unobstructed waterway}}{\text{Width of obstructed waterway}}$$

In cases of standard designs, where particulars of discharge and silt factor are not available, velocity of current may be assumed as 3m/sec.

5.9.2.1.3 Where past record is not available and bridge is constructed across river in other than alluvial bed, velocity of current may be estimated from observations/past record of adjacent sites on the same river.

5.9.2.2 Masonry and concrete piers shall be provided at both ends with suitably shaped

cutwaters, as shown in Table-4 to the requisite height. Cut waters may be provided upto a height of 1m above HFL taking afflux into consideration or to any other height that may be found suitable by the Engineer, depending on local conditions.

5.9.2.3 When a current strikes a pier at an angle, the velocity of current shall be resolved into two components one parallel and the other normal to the pier.

(a) The force due to water pressure parallel to the pier shall be determined as indicated in Cl. 5.9.2.1. taking the velocity V as the component of the velocity of the current in a direction parallel to the pier.

(b) The force due to water pressure normal to the pier shall be calculated as indicated in clause 5.9.2.1 taking the velocity V as the component of the velocity of the current in a direction normal to the pier, the area A as the area of elevation of the part of the pier exposed to the current and the constant K as 79 except in case of a circular pier where the constant shall be 35.

5.9.2.4 To provide against the effect of possible variations in the direction of the current from the direction assumed in the design, allowance shall be made in the design of piers except in the cases of piers of single circular sections for an additional force acting normal to the pier, and having an intensity of pressure per unit area of the exposed surface of the pier equal to 20 per cent of the intensity of pressure taken as acting in a direction parallel to the pier.

5.9.2.5 When supports are made with two or more piles or trestle column, the group shall be treated as solid rectangular pier of the same overall width and the value of constant 'K' taken as 66 for the purpose of evaluating the total water pressure. This will apply in calculating effects of cross currents also.

5.9.2.6 The point of application of the total water pressure (centre of pressure) calculated in accordance with clauses 5.9.2.1 to 5.9.2.5 shall be taken at 1/3 of the distance measured from the top between the upper and lower wetted limits of the surface under consideration.

5.9.2.7 The effect of cross currents can generally be neglected unless the effect of such water current exceeds the additional allowance of 20 per cent provided for in Clause 5.9.2.4.

5.10 BUOYANCY EFFECT (B) :

5.10.1 For designing of foundation full buoyancy considered upto HFL or LWL, as the case may be, depending upon the most critical combination, irrespective of the type of soil. However, if foundations are resting on rock and have adequate bond with it, suitable reduction in buoyancy may be considered at the discretion of Engineer responsible for design but in any case the reduction shall not be less than 50% of full buoyancy.

5.10.1.1 Checking stability against overturning :

The effect of buoyancy upto HFL, as indicated in Clause 5.10.1, shall be considered in the design to check the stability of bridge foundations against any possible combination of forces.

5.10.1.2 For calculations of foundation pressure:

In case of foundations of bridges where water perennially present, buoyancy effect shall be considered as per Clause 5.10.1 for LWL and also for HFL. Where water flow is not perenial, buoyancy effect shall be considered with respect to lowest level of water table and HFL. Buoyancy effect upto LWL is considered for checking maximum foundation pressure and upto HFL for checking minimum foundation pressure.

5.10.2 Design of submerged masonry or concrete sub structure :

For design of submerged masonry or concrete structure the buoyancy effect through pore pressure may be limited to 15% of full buoyancy upto LWL for checking of compressive strength and upto HFL for checking tensile strength.

5.11 WIND PRESSURE EFFECT (WL)

Wind pressure shall be taken into account for bridges of span 18m and over, and the intensity of pressure, along with the effects to be considered shall be as per Bridge Rules (Revised 1964 and reprinted 2008).

5.12 SEISMIC FORCES (SF)

5.12.1 General : Bridge as a whole and every part of it shall be designed and constructed to resist stresses produced by seismic force as specified in the IRS Bridge Rules and subject to amplifications given in this Code. The stresses shall be calculated as the effects of forces applied vertically or horizontally at the centre of mass of the elements of the structure into which it is conveniently divided for the purpose of design.

5.12.1.1 Slab, box and pipe culverts need not be designed for seismic forces.

For design of substructures of bridges in different zones, seismic forces may be considered as given below :-

Zone I to III : Seismic forces shall be considered only in case of bridges of overall length more than 60m or spans more than 15m.

Zone IV and V: Seismic forces may be considered for all spans.

Note : In zones IV and V, suitably designed reinforced concrete piers and abutments shall be used and where use of mass concrete/ masonry substructures becomes unavoidable, a minimum surface reinforcement as per formula given below may be provided vertically on each face of the pier/abutment to improve the ductility of the substructure and surface reinforcement not less than 5 Kg/m^2 may be provided horizontally. Spacing of such reinforcement shall not exceed 500mm center to center.

$$P_s = \frac{0.2F_r}{F_y} \times 100\%$$

Where,

P_s = percentage steel area on each face of masonry/mass concrete.

F_r = modulus of rupture of masonry/mass concrete,

F_y = yield strength of steel.

5.12.1.2 Modal analysis shall be necessary, for the following cases, in Zone IV and V.

(a) in the design of bridges of types, such as suspension bridges, bascule bridges, cable-stayed bridges, horizontally curved girder bridges and reinforced concrete arch or steel bridges, and

(b) when the height of substructure from base of foundations to the top of pier is more than 30m or when the bridge span is more than 120m.

(c) In important bridges where there is a possibility of amplification of vertical seismic co-efficient modal analysis is preferable.

5.12.1.3 Seismic forces shall be calculated on the basis of depth of scour caused by mean annual flood. Earthquake and discharge greater than the mean annual flood shall not be assumed to occur simultaneously.

5.12.2 Seismic forces on substructure above the scour depth shall be as follows: -

(a) Horizontal and Vertical seismic forces due to self weight of the substructure applied at the centre of mass ignoring reduction due to buoyancy and uplift.

(b) Hydrodynamic forces as specified in clause 5.12.5 and increase in the earth pressure due to earthquake as per clause 5.12.6 acting on the substructure.

(c) Horizontal and vertical seismic forces due to dead load of superstructure and live load as specified in Bridge Rules applied at the centre of their mass and considered to be transferred from superstructure to substructure through the bearings.

5.12.3 Substructure shall be designed for the worst effect of seismic forces given in clause 5.12.2 assuming the horizontal seismic forces to act either parallel or perpendicular to the direction of traffic.

5.12.4 Substructures oriented skew shall be designed for the worst effect of the seismic forces given in clause 5.12.2 assuming the horizontal seismic forces to act either parallel or perpendicular to the face of the pier or abutment.

5.12.5 For submerged portions of the pier, hydrodynamic forces (in addition to earthquake forces calculated on the mass of the pier) shall be assumed to act in a horizontal direction corresponding to that of earthquake motion. The total horizontal force F shall be given by the following formula:

$$F = C_e \alpha_h W_e$$

Where

C_e = a coefficient (as given in Table –5).

α_h = design horizontal seismic coefficient as given in Bridge Rules.

W_e = Weight of the water of the enveloping cylinder (See.5.12.5.2)

TABLE 5

Height of submerged portion of pier (H)/ Radius of Enveloping cylinder	Values of C_e
1.0	0.390
2.0	0.575
3.0	0.675
4.0	0.730

5.12.5.1 The pressure distribution will be as shown in Fig.6. Values of coefficients, C_1, C_2, C_3 ,and C_4 for use in Fig.6 are given below :

C1	C2	C3	C4
0.1	0.410	0.026	0.9345
0.2	0.673	0.093	0.8712
0.3	0.832	0.184	0.8103
0.4	0.922	0.289	0.7515
0.5	0.970	0.403	0.6945
0.6	0.990	0.521	0.6390
0.8	0.999	0.760	0.5320
1.0	1.000	1.000	0.4286

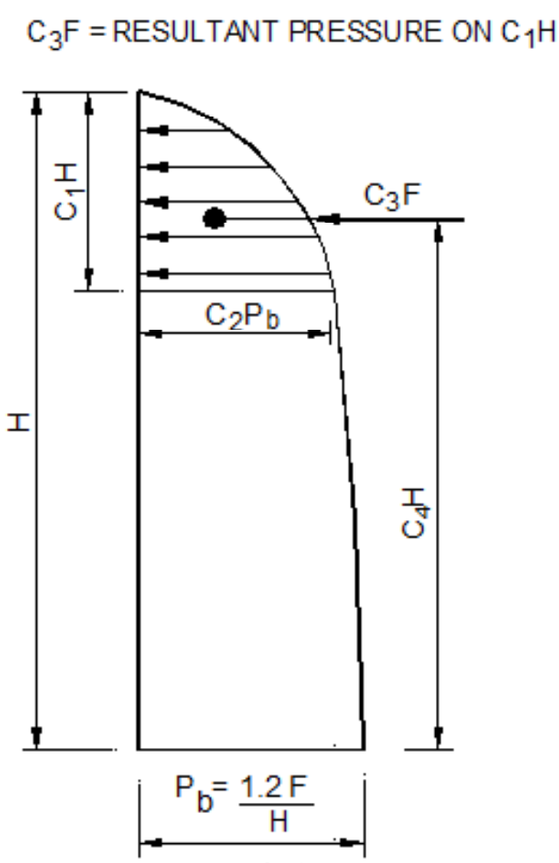

Fig 6

5.12.5.2 Some typical cases of submerged portions of piers and enveloping cylinders are illustrated in Fig.7

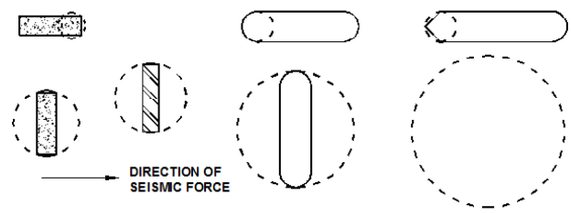

CASES OF ENVELOPING CYLINDER
Fig 7

5.12.5.3 The Hydrodynamic suction from the water side and dynamic increment in earth pressures from the earth side shall not be considered simultaneously. The water level on earth side may be treated as the same on the river side.

5.12.6 Earth Pressure Due To Seismic Effects

Lateral Earth Pressure – The pressure from earth fill behind abutments and wing walls during an earthquake shall be as given in Clause 5.12.6.1 to 5.12.6.4.

5.12.6.1 Active Pressure Due To Earth Fill

(a) The general conditions encountered in the design of retaining walls are illustrated in Fig.8. The active pressure exerted against the wall shall be

$P_a = 4.9 \times Wh^2C_a$ in Newtons.

$(P_a = \frac{1}{2} Wh^2C_a$ in kg)

Where,

P_a = Active earth pressure in kg per metre length of wall.

W = Unit weight of soil in kg/m^3

h = Height of wall in metre,

$$C_a = \frac{(1 \pm \alpha_v) Cos^2(\phi - \alpha - \lambda)}{Cos\lambda . Cos^2\alpha . Cos(\delta + \alpha + \lambda)} \times$$

$$\left[\frac{1}{1 + \left\{ \frac{Sin(\varphi + \delta) Sin(\varphi - i - \lambda)}{Cos(\alpha - i) Cos(\delta + \alpha + \lambda)} \right\}^{1/2}} \right]^2$$

the maximum of the two being the value for design,

α_v = Vertical seismic coefficient its direction being taken consistently throughout the stability analysis of wall and equal to $\frac{1}{2}\alpha_h$.

ϕ = Angle of internal friction of soil.

λ = $\tan^{-1} \frac{\alpha_h}{1 \pm \alpha_v}$

α = Angle which earth face of the wall makes with the vertical.

i = Slopes of earthfill.

δ = Angle of friction between the wall and earthfill and

α_h = Horizontal seismic coefficient.

(b) The active pressure may be determined graphically by means of the method described in Appendix-II.

(c) Point of Application **:** From the total pressure computed as above subtract the static active pressure obtained by putting $\alpha_h = \alpha_v = \lambda = 0$ in the expression given in 5.12.6.1. The remainder is the dynamic increment. The static component of the total pressure shall be applied at an elevation h/3 above the base of the wall. The point of application of the dynamic increment shall be assumed to be at mid-height of the wall.

5.12.6.2 Passive Pressure Due To Earth Fill

(a) The general conditions encountered in the design of retaining walls are illustrated in Fig.8. The passive pressure against the walls shall be given by the following formula

$P_p = 4.9\ Wh^2C_p$ in Newtons

($P_p = \frac{1}{2}\ Wh^2C_p$ in kg)

Where,

P_p = Passive earth pressure in kg per metre length of wall.

$$C_p = \frac{(1 \pm \alpha_v) Cos^2(\phi + \alpha - \lambda)}{Cos\lambda Cos^2\alpha Cos(\delta - \alpha + \lambda)} X$$

$$\left[\frac{1}{1 - \left\{ \frac{Sin(\varphi + \delta) Sin(\varphi + i - \lambda)}{Cos(\alpha - i) Cos(\delta - \alpha + \lambda)} \right\}^{1/2}} \right]^2$$

the minimum of the two being the value for design; w, h, ϕ, i, α and δ are as defined in 5.12, 6.1, and

$\lambda = \tan^{-1} \frac{\alpha_h}{1 \pm \alpha_v}$

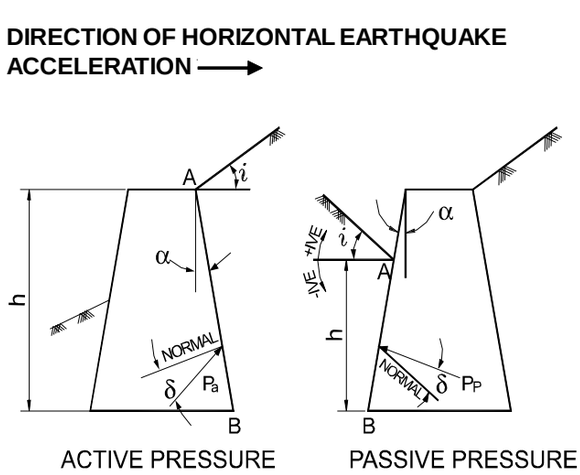

FIG 8 – Earth Pressure Due To Earthquake On Retaining Walls.

(b) The Passive pressure may be determined graphically by means of the method described in Appendix-III.

(c) Point of application – From the static passive pressure obtained by putting $\alpha_h = \alpha_v = \lambda = 0$ in the expression given in 5.12.6.2 subtract the total pressure computed as above. The remainder is the dynamic decrement. The static component of the total pressure shall be applied at an elevation h/3 above the base of wall. The point of application of the dynamic decrement shall be assumed to be at an elevation 0.66 h above the base of the wall.

5.12.6.3 Active Pressure Due to Uniform Surcharge

(a) The active pressure against the wall due to a uniform surcharge of intensity 'q' per unit area of the inclined earthfill surface shall be :

$$(P_a)\ q = \frac{q_h \cos\alpha}{\cos(\alpha - i)} C_a$$

(b) Point of application – The dynamic increment in active pressures due to uniform surcharge shall be applied at an elevation of 0.66 h above the base of the wall, while the static component shall be applied at mid-height of the wall.

5.12.6.4 Passive Pressure Due To Uniform Surcharge

(a) The passive pressure against the wall due to a uniform surcharge of intensity 'q' per unit area of the inclined earthfill shall be :

$$(P_P)\ q = \frac{q_h \cos\alpha}{\cos(\alpha - i)} C_p \text{ in kg}$$

(b) Point of application : The dynamic decrement in passive pressure due to uniform surcharge shall be applied at an elevation of 0.66 h above the base of the wall while the static component shall be applied at mid-height of the wall.

5.12.7 Effect Of Saturation On Lateral Earth Pressure

5.12.7.1 For saturated earthfill, the saturated unit weight of the soil shall be adopted as in the formulae described in 5.12.6.

5.12.7.2 For submerged earthfill, the dynamic increment (or decrement) in active and passive earth pressure during earthquakes shall be found from expressions given in 5.10.6.1 and 5.10.6.2 with the following modifications.

(a) The value of δ shall be taken as ½ the value of δ for dry backfill.

(b) The value of λ shall be taken as follows :

$$\lambda = \tan^{-1} \frac{w_s}{w_s - 1} \times \frac{\alpha_h}{1 \pm \alpha_v}$$

Where,

w_s = saturated unit weight of soil in gm/cc.

α_h = horizontal seismic coefficient and

α_v = vertical seismic coefficient which is $\frac{1}{2}\alpha_h$.

(c) Buoyant unit weight shall be adopted.

(d) From the value of earth pressure found out as above subtract the value of earth pressure determined by putting $\alpha_h = \alpha_v = \lambda = 0$ but using buoyant unit weight. The remainder shall be dynamic increment.

5.12.7.3 Hydrodynamic pressure on account of water contained in earthfill shall not be considered separately as the effect of acceleration on water has been considered indirectly.

5.12.8 In loose sands or poorly graded sands with little or no fines, the vibration due to earthquake may cause liquefaction or excessive total and differential settlement. In zones III, IV and V founding of bridges on such sands shall be avoided unless appropriate methods of compaction or stabilisation are adopted.

5.13 COMBINATIONS OF LOADS AND FORCES

The following combinations of loads and forces shall be considered in the design of substructures and foundations -

(a) Combination I - The worst possible combination of Dead load (DL), Live load (LL), Dynamic augment (I), Longitudinal forces (LF), Forces due to curvature and eccentricity of track (CF), Earth Pressure (EP), Forces due to water current (WC) and Buoyancy (B), Temperature effects where considered (TMP) and Effects due to resistance of expansion bearings to movements (EXB).

In addition, in case of multi-span bridges provided with sliding or elastomeric bearings, the design of sub-structure shall also be checked for worst possible combination of dead load, longitudinal forces, earth pressure, forces due to water current and buoyancy and effect due to resistance of expansion bearings to movement. In this connection, clause 2.8.2.4.1 of IRS Bridge Rules may be referred.

(b) Combination II - The worst possible combination of forces mentioned in combination I alongwith Wind pressure effect (WL).

(c) Combination III - In case of bridges for which seismic forces have to be considered as per clause 5.12.1.1, the worst possible combination of forces in combination I plus forces and effects due to earth quake Seismic forces (SF). Wind pressure effect need not be taken into account when seismic effect is considered.

(d) Combination IV - The worst possible combination of all loads and forces and effects which can operate on any part of the structure during erection. For bridges for which seismic forces have to be considered as per clause 5.12.1.1, either wind pressure effect or seismic effect whichever gives the worst effect need only be considered.

5.14 PERMISSIBLE STRESSES

5.14.1 The various parts of the bridge substructure shall be so proportioned that the calculated maximum stresses resulting from the design loading shall not exceed those specified in clauses hereunder for the material used in the construction.

5.14.2 The effective length of any horizontal section of the pier or abutment which resists the vertical and horizontal external loads may be taken as equal to the length between the outer edges of the bed blocks plus twice the depth of the section under consideration below the underside of the bed blocks, subject to a maximum equal to the whole length of the masonry at that section.

5.14.3 Where substructures are of brick or stone construction with lime or cement mortars of standard mixes of 1:2 and 1:4 respectively, the permissible stresses in such sound masonry shall be taken as Under :-

Type of masonry	Permissible compressive stresses		Permissible tensile or shear stresses	
	KN/m^2	t/m^2	KN/m^2	t/m^2
1. Brick masonry in lime mortar 1:2	540	55	108	11
2. Brick masonry in cement mortar 1:4	863	88	172	17.5
3. Coarsed rubble masonry in lime mortar 1:2	863	88	54	5.5
4. Coarsed rubble masonry in cement mortar 1:4	1079	110	98	10

5.14.4 Where the type of masonry or mortar mixes not specified above are adopted, strength tests as described in Appendix-IV shall be conducted to determine the ultimate crushing strength. The permissible compressive stresses in masonry shall then not exceed 1/6th of the ultimate crushing strength. The permissible tensile and shear stresses for the various types of masonry can be determined from the ultimate crushing strength by using the following ratios: -

(i) Brick masonry in lime mortar and cement mortar 1/30

(ii) Stone masonry in lime mortar.. 1/100

(iii) Stone masonry in cement mortar. 1/60

However, the permissible stresses arrived at by adopting the above ratios shall not exceed the values given in Table 5.14.3.

5.14.5 In substructures built of plain or reinforced cement concrete, the permissible stresses shall not exceed those specified in IRS Concrete Bridge Code (Revised 1962). It shall be ensured that standard of construction and supervision are in conformity with the codes.

5.14.6 If the concrete substructure is built in stages providing construction joints between such stages of concreting the permissible tensile stress may be limited to 80% of the values indicated in Clause 5.14.5 above.

5.15 PERMISSIBLE INCREASE IN STRESSES

5.15.1 For combination of loads stated in clause 5.13, the permissible stresses on substructures shall be increased as follows : -

Combination I ..... Nil

Combination II &III.... $33\frac{1}{3}$%

Combination IV 40%

5.16 CERTIFICATION OF EXISTING MASONRY AND CONCRETE SUBSTRUCTURES FOR INTRODUCTION OF NEW TYPES OF LOCOMOTIVES, ROLLING STOCKS AND NEW TRAIN COMPOSITIONS OR FOR GAUGE CONVERSION.

5.16.1 Except for the cases described in clause 5.16.2 and 5.16.3, certification of substructures of existing bridges as per para-5 Chapter VI of Rules for Opening of a Railway, shall be based on the physical condition of the piers and abutments. When new types of locomotives and rolling stocks are permitted to run on the section for the first time, substructures of bridges should be kept under observation as considered necessary by the Chief Engineer.

5.16.2 Certification of substructures when new types of locomotives, rolling stock and the train compositions cause increase of axle load, tractive effort and braking forces over bridges.

5.16.2.1 The Railway should check the theoretical stresses in abutments and piers of existing bridges. The certification shall be done after appropriate action as per criteria given in clauses 5.16.2.2 and 5.16.2.3.

5.16.2.2 Criteria For Masonry Abutments / Piers

S. No	Max.Compressive stress/ equivalent compressive stress	Factor of safety for compressive/equivalent compressive stress.		Remarks
		Without occasional load	With occasional load	
1	2	3	4	5
1	As per values given in IRS Bridge Substructure Code vide clause 5.14.3 & 5.14.4	≥ 6	≥ 4.5	
2	Upto 100% overstress	≥ 3	≥ 2.25	Should be allowed subject to good condition of masonry as contemplated for gauge conversion vide clause 5.16.3.2
3	Upto 200% overstress	≥2	≥1.5	Can be allowed subject to good condition of masonry and close observation of bridges as considered necessary by the Chier Engineer after introduction of new locomotive/ rolling stock or train composition
4	More than 200 % overstress	< 2	< 1.5	Should be strengthened/ rebuilt to appropriate loading standard

Note : *If maximum tensile stress exceeds by more than 100% of the values as contemplated in IRS Bridge Substructure Code vide clause 5.14.3 & 5.14.4, tensile zone shall be neglected and equivalent compressive stress shall be worked out.*

5.16.2.3 Criteria For Mass Concrete Abutments/Piers.

Upto 50% overstress in bending compressive stress beyond that specified in the IRS Concrete Bridge Code can be allowed subject to good condition of mass concrete and close observation as considered necessary by the Chief Engineer. If the overstress in compression exceeds 50%, the substructures shall be strengthened/rebuilt to appropriate standard of loading.

Note : *If maximum tensile stress exceeds by more than 100% of the values, as contemplated in IRS Concrete Bridge Code, tensile zone shall be neglected and equivalent compressive stress shall be worked out.*

5.16.2.4 Whenever it is not possible to carry out theoretical checks, or wherever the results of theoretical checks are found to be inconsistent with the physically sound condition of an existing bridge, running of locomotives and rolling stock with heavier tractive force/ braking force may be permitted subject to physical condition being certified and bridges being kept under close observation, as considered necessary by the Chief Engineer. In such cases, the increase of tractive and/ or braking forces shall not be more than 20% over bridges above the level of tractive and braking forces running over the bridges for the past one year or so.

In cases where tractive effort is found to exceed the limit of 20% mentioned above, the maximum tractive effort of the locomotive(s) to be considered may be fixed by Chief Bridge Engineer in consultation with the Mechanical and Operating Departments for each specific bridge location keeping in view the load to be hauled, the gradient on the approaches and operating characteristics of the locomotives subject to the physical condition of the bridges being certified sound and the bridges being kept under close observation as considered necessary by the Chief Engineer.

5.16.2.5 Pressure on the Soil at the base of foundation:

The pressure on the soil at the base of foundation shall be checked and if it is in compression throughout the base, its maximum value shall not exceed the safe/allowable bearing pressure of soil i.e. the shear stress and settlement of the soil shall be within permissible limits. If on calculating the foundation pressure, considering the full base width, tension is found to develop on one side, the foundation pressure shall be recalculated on the reduced area of contact. The maximum pressure so arrived at shall not exceed the safe/allowable bearing capacity of the soil.

5.16.2.6 Checking the Stability of Buried Abutments:

(i) While checking the stability of buried abutments, the passive pressure at any section of the abutment shall be considered for a height (h) from the section under consideration to the point of intersection between slope line of the earth fill and the failure line from the section at an angle of $45^0 - \Phi/2$ to the horizontal as shown in fig 8 (a).

The weight of soil mass above height h shall be considered to be acting as surcharge for which the passive earth pressure shall be considered as under :

$P'_P = (W_S/B)h.\ K_p$

(Acting at $\frac{h}{2}$ from the section under consideration as shown in Fig. 8(a))

Where,

W_s = Weight of soil mass above height h

B = Width of earth fill at height h

h = Height of earth fill worked out as above.

K_p = Coefficient of static passive earth pressure as per clause 5.7.1.6

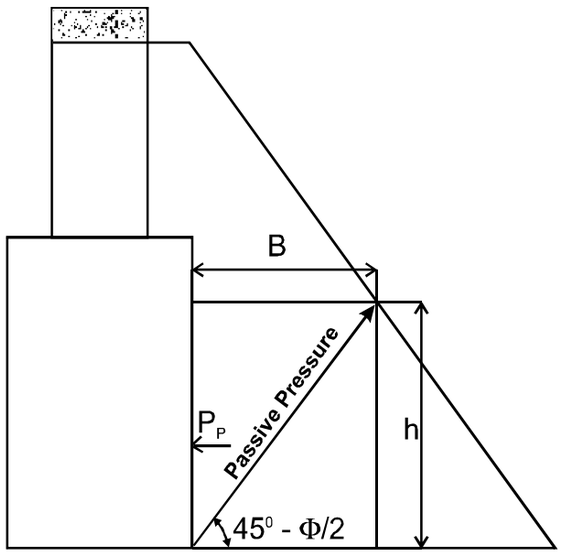

EFFECTIVE HEIGHT OF EARTH FILL FOR PASSIVE PRESSURE

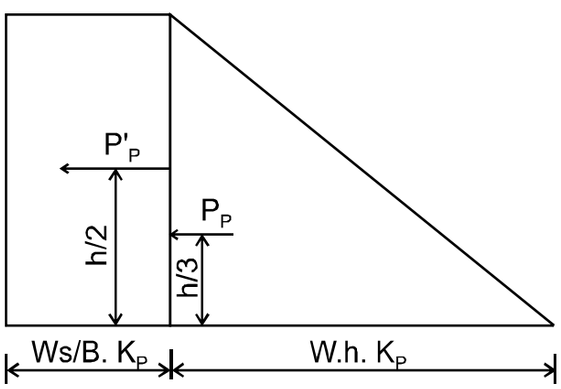

PASSIVE EARTH PRESSURE DIAGRAM

Fig. 8(a)

(ii) While checking the stability of buried abutments, full passive pressure resistance of the soil as derived from sub para (i) above may be taken into account in cases of old consolidated formations (50 years or more) where the slopes are well protected and have no known history of scour. In other cases, only 1/3 of the passive pressure as derived from sub para (i) above shall be considered. Moreover, for recent constructions, where the earth fill is not fully consolidated, passive pressure below the ground level shall only be considered as per clause 5.7.1.5.

(iii) Where the certification of buried abutments is based on the criteria laid down in subclause (i) and (ii) above, such buried abutments shall be kept under regular and close observation regarding any movements in longitudinal direction. Suitable scheme shall be devised and implemented to detect and monitor any movement of buried abutments with respect to adjacent pier/ abutment. The details of scheme, the interval of measurements and the level of monitoring of recorded data shall be as decided by Chief Engineer. The frequency of monitoring may gradually be relaxed if the incremental movement of buried abutments are found to be negligible, or attributable to other factors like temperature variation, measurement errors etc.

5.16.2.7 Checking of Well Foundations:

(a) Where the records of actual tilt & shift of well foundations of existing bridges are available, the calculation of moments due to tilt & shift shall be based on actual tilt & shift. In other cases, where the actual tilt and shift can not be ascertained with a fair degree of certainty, a tilt of 1 in 100 and shift of D/40 subject to a minimum of 150mm shall be considered for computing the moment (D is the width or diameter of well).

(b) Hydrodynamic forces as per clause 5.12.5 and forces due to water current (WC) as per clause 5.9 shall not be considered to occur simultaneously while checking the foundations and substructures of existing bridges for load combination III of Clause 5.13 (c).

(c) For Checking of well foundation of existing bridges as per load combination II of clause 5.19 (b) wind forces shall not be considered to occur simultaneously with the

maximum scour induced due to maximum design discharge. In such cases, the scour induced on account of Mean Annual Flood duly doubled on account of obstructions (2 D_{Lacey} for mean annual flood) shall be considered for checking the well foundation of existing bridges.

5.16.3 Certification Of Substructure For Gauge Conversion

5.16.3.1 While checking strength of existing bridge substructure on lines proposed for conversion to wider gauge the standard of loading applicable to the wider gauge shall be considered.

5.16.3.2 In case of gauge conversion, the strength of existing bridge substructure should be checked in accordance with the provision of clause 5.16.3.3, subject to any further safeguard as considered necessary by the Chief Engineer with due regard to the physical condition of the substructures.

5.16.3.3 Checking Design Of Substructures Existing In Narrower Gauge For Conversion To Wider Gauge.

Existing gravity type substructures to narrower gauge may be permitted to be retained after conversion of the section to a wider gauge, provided the maximum stresses developed in the substructure do not exceed the permissible stresses stipulated in clause 5.14.3 and 5.14.4 by

(i) 100 % in case of compression in masonry substructures, and no overstress in compression in concrete substructures.

(ii) 100 % in case of tension in masonry and concrete structures.

The pressure on the soil at the base of foundation shall be checked and if it is in compression throughout the base, its maximum value shall not exceed the safe/allowable bearing pressure of soil i.e. the shear stress and settlement of the soil shall be within permissible limits. If on calculating the foundation pressure, considering the full base width, tension is found to develop on one side, the foundation pressure shall be recalculated on the reduced area of contact. The maximum pressure so arrived at shall not exceed the safe/allowable bearing capacity of the soil.

5.17. STRUCTURES STRENGTHENED BY JACKETTING

5.17.1 Existing substructures may be strengthened by jacketting which should be so designed and constructed as to make the composite structure function monolithically.

6. FOUNDATIONS:

6.1 GENERAL DESIGN CRITERIA:

As far as possible, foundations should be located on a firm ground having stable strata. This would not always be possible and, therefore, the foundations must be designed adequately against any expected failures. Following basic requirements should be fulfilled:

(i) Safety against strength failure:

Foundation should be safe against catastrophic failures caused by foundation pressures exceeding the “Bearing Capacity” of foundation soil. It is basically the strength failure of the supporting soil mass.

(ii) Safety against deformations and differential settlements:

The foundation should deform within acceptable limits of total and differential settlements. These acceptable limits depend on the type of structure and sub-strata involved and should be decided judiciously. The settlement shall not normally exceed 25 mm after the end of the construction period for bridges with simply supported spans. Larger settlement may be allowed if adjustment of the level of girders is possible so as to eliminate infringements to track tolerances.

In case of structures sensitive to differential settlement, the tolerable settlement limit has to be fixed based on conditions in each case.

(iii) Allowable Bearing Pressure :
The allowable bearing pressure for foundation supported by rock or soil mass, based on the above two criteria, shall be taken as lesser of the following :

(a) Net ultimate bearing capacity divided by factor of safety of 2.5, or

(b) The allowable pressure (maximum) to which the foundation of the structure may be subjected without producing excessive settlement (i.e. more than 25mm) or excessive differential settlement of the structure.

(iv) In case of open foundation, the resultant of all forces on the base of foundation (for rectangular foundation) shall fall within the middle third if the structure is founded on soil. Depth of foundations in soil strata shall not be less than 1.75 m below the anticipated scour level. Foundation shall not normally rest on compressible soils.

6.2 SUB-SOIL INVESTIGATIONS :

6.2.1 Scope :

To determine the nature, extent and engineering properties of soil/rock strata and depth of ground water table for development of a reliable and satisfactory design of bridge foundation.

6.2.1.1 Guidance of the following standards with latest edition may be taken :

(i) IS:1892 "Code of Practice for Sub surface Investigation for Foundations" may be utilised for guidance regarding investigation and collection of data.

(ii) IS:6935 "Method of Determination of Water Level in a Bore Hole."

(iii) IS:2720 – "Method of Test for Soils." The tests on undisturbed samples shall be conducted as far as possible at simulated field conditions to get realistic values.

(iv) IS:1498 "Classification & Identification of Soils for General Engineering Purposes."

(v) IRC:78 "Standard Specification and Code of Practice for Road Bridges, Section VII – Foundation and Sub-structure."

6.2.1.2 Sub-surface investigations to be carried during three stages viz.

(i) Reconnaisance Survey;
(ii) Preliminary Survey; and
(iii) Final Location Survey.

6.2.1.3 Reconnaisance Survey :

At reconnaisance stage, obviously bad locations for bridge foundations, such as, unstable hill sides, talus formation (i.e. soil transported by gravitational forces consisting of rock fragments), swampy areas, peaty ground etc, are avoided. The reliable data from geological and topographical maps and other soils surveys done, in the past are scrutinised.

6.2.1.4 Preliminary Survey :

The scope is restricted to determine depth, thickness, extent and composition of each soil stratum, location of rock and ground water and to obtain approximate information regarding strength and compressibility characteristics of various strata. The objective of the exploration is to obtain data to permit the selection of the type, location and principal dimensions of all major structures.

6.2.1.5 Final Location Survey :

During the final location stage, undisturbed samples are collected to conduct detailed tests, viz, shear tests, consolidation tests etc, to design safe and economical structure. The exploration shall cover the entire length of the bridge and also extend at either end for a distance of about twice the depth below bed of the end main foundations, to assess the effect of the approach embankment on the end foundations.

6.2.1.6 During sub-surface investigations, the following relevant information will be obtained :

(i) Site Plan – showing the location of foundations and abutments, etc.

(ii) Cross Sections along the proposed bridge, indicating rail level, top of superstructure, high flood level (HFL), low water level (LWL), founding levels etc.

(iii) Load conditions shown on a schematic plan, indicating design combination of loads transmitted to the foundation;

(iv) Environmental factors – Information relating to the geological history of the area, seismicity of the region, hydrological information, etc.

(v) Geotechnical Information – Giving sub-surface profile with stratification details, engineering properties of the founding strata, e.g. index properties, effective shear parameters, determined under appropriate drainage conditions, compressibility characteristics, swelling properties, results of field tests, like static and dynamic penetration tests;

(vi) Modulus of Elasticity and Modulus of sub-grade reaction;

(vii) A review of the performance of a similar structure, if any, in the locality; and

(viii) Information necessary to assess the possible effects of the new structure on the existing structures in the neighbourhood.

6.2.2 Open Foundation:

Investigation by “Trial Pit Method” can be carried out, and soil classification determined by visual inspection, or by simple classification tests. Safe bearing capacity may be assumed from the values indicated in Table 6, as a guide.

6.2.3 Deep Foundations:

Exploratory bore holes shall be driven by deep boring equipment and samples collected at every 1.5m or at change of strata, using special techniques of sampling. Often, in case of cohesionless soil, undisturbed samples cannot be taken and recourse has to be made to in-situ field tests.

Normally, the depth of boring will extend to 1.5 to 2.0 times the width of footing below foundation level. The first boring at each foundation shall extend to a depth sufficient to disclose deep problem layers. Soft strata shall be penetrated completely even when covered with a surface layer of higher bearing capacity. Guidance of the following Standards with latest edition may be taken:

(i) IS:2132 "Indian Standard Code of Practice for Thin Walled Tube Sampling of Soils."

(ii) IS:8763 "Guide for Undisturbed Sampling of Sands."

6.3 FOUNDATIONS IN NON-COHESIVE STRATA

6.3.1 Bearing Capacity

Bearing capacity of bridge foundations in non-cohesive strata can be determined by several methods, such as plate load test (for shallow depths only), dynamic cone penetration test, standard penetration test and strength parameters of soil. The choice of the method will depend upon the feasibility of adoption and importance of the structure. These methods may be regarded as aids to design and these cannot replace the critical role of engineering judgement. For determination of the bearing capacity, guidance of following Standards with latest edition may be taken:

(i) IS : 6403 "Code of Practice for Determination of Bearing Capacity of Shallow Foundations;"

(ii) IS : 2911(Pt. I to IV) - "Code of Practice for Design and Construction of Pile Foundations;"

(iii) IS : 2131 "Method for Standard Penetration Test for Soils;"

(iv) IS : 4968 (Pt. I and Pt.II) – "Method for Sub-surface Sounding for Soils" Use of dynamic cone penetration test may be conducted where considered appropriate;

(v) IS : 1888 "Method of Load Test on Soils."

(vi) IS : 1904 "Code of Practice for Design and Construction of Foundation in Soil: General Requirements."

6.3.2 Settlement:

Settlement of foundations in non-cohesive soils can be determined from Plate Load Test and Standard Penetration Test. The settlements in this soil take place very quickly and are over for dead loads during construction stage itself.

6.3.3 Allowable Bearing Pressure:

Allowable bearing pressure for dimensioning of the foundation will be judiciously decided in each case, keeping in view the importance of the structure and criteria mentioned in para 6.1 above.

6.4 FOUNDATIONS IN COHESIVE STRATA:

6.4.1 Determination of bearing capacity :

Bearing capacity for foundations in cohesive strata will be determined in the similar manner as determined in case of foundations in non-cohesive soils (para 6.3.1)

TABLE 6
PRESUMPTIVE SAFE BEARING CAPACITY OF SOIL

Sr. No	Types of Rocks/Soils	Safe bearing capacity $KN/m^2/t/m^2$	Remarks
(1)	(2)	(3)	(4)
	(a) *Rocks*		
1.	Rocks (hard) without lamination and defects, for example , granite, trap and diorite	3,240 (330.39)	..
2.	Laminated rocks, for example, stone and lime stone in sound condition	1,620 (165.19)	..
3.	Residual deposits of shattered and broken bed rock and hard shale cemented material	880 (89.73)	..
4.	Soft Rock	440 (44.87)	..
	(b) *Non-cohesive soils:*		..
5.	Gravel, sand and gravel, compact and offering high resistance to penetration when excavated by tools	440 (44.87)	(See Note 2)
6.	Coarse sand, compact and dry	440 (44.87)	Dry means that the ground water level is at a depth not less than the width of foundation below the base of the foundation
7.	Medium sand, compact and dry	245 (24.98)	..
8.	Fine sand, silt (dry lumps easily pulverized by the fingers).	150 (15.30)	..
9.	Loose gravel or sand gravel mixture loose coarse to medium sand, dry	245 (24.98)	(See Note 2)
10	Fine sand, loose and dry.	100 (10.20)	
	(c)*Cohesive soils:*		
11.	Soft shale, hard or stiff clay in deep bed, dry	440 (44.87)	This group is susceptible to long term consolidation settlement
12.	Medium clay, readily indented with a thumb nail	245 (24.98)	..
13	Moist clay and sand clay mixture which can be indented with strong thumb pressure	150 (15.30)	..
14	Soft clay indented with moderate thumb pressure	100 (10.20)	..
15.	Very soft clay which can be penetrated several centimeters with the thumb	50 (5.10)	..
16.	Black cotton soil or other shrinkable or expansive clay in dry condition (50 percent saturation)	..	See Note 3. To be determined after investigation
	(d) *Peat:*		
17.	Peat	..	See Note 3 and Note 4. To be determined after investigation
	(e) *Made-up Ground:*		
18.	Fills or made-up ground	..	See Note 2 and Note 4. To be determined after investigation

Note: 1- Value listed in the Table are from shear consideration only

Note:2- Values are very much rough due to the following reasons:

(a) Effect of characteristics of foundations (that is, effect of depth, width, shape, roughness, etc.) has not been considered.

(b) Effect of range of soil properties (that is, angle of frictional resistance, cohesion, water table, density, etc) has not been considered.

(c) Effect of eccentricity and indication of loads has not been considered.

Note:3 – For non-cohesive soils, the values listed in the Table shall be reduced by 50% if the water table is above or near the base of footing

Note 4: Compactness of non-cohesive soils may be determined by driving the cone of 65 mm dia and 60 apex angle by a hammer of 65 kg falling from 75 cm. If corrected number of blows (N) for 30 cm penetration are less than 10, the soil is called loose, if N lies between 10 and 30, it is medium, if more than 30, the soils is called as dense.

6.4.2 Settlement considerations:

Settlements below bridge foundation should be computed for dead load only. In cohesive soils, settlement takes place over a long period of time and the total settlement P will comprise of three parts, i.e.

P= Pi + Poed + Ps

Where,

Pi = Immediate or elastic settlement i.e. that part of the settlement of the structure that takes place immediately on application of the load;

Poed = Primary consolidation settlement measured by odeometer, i.e. the settlement due to reduction in volume of a soil mass, caused by the application of sustained stresses and due to squeezing out of water from the voids.

Ps = Secondary settlement i.e. the settlement due to reduction in volume of a soil mass caused by the application of a sustained stresses and due to the adjustment of internal structure of the soil mass.

6.4.2.1 Estimation of immediate and primary consolidation settlements

For computation of immediate settlement and primary consolidation settlement, procedures provided in IS:8009 Part I and Part II– "Code of Practice for Calculation of Settlement of Foundations", shall be followed.

6.4.2.2 Estimation of secondary consolidation settlement Ps:

The Secondary consolidation settlement may be computed as under:

(a) If the load increment is more than $(p_c - p_o)$

[i.e. $\Delta p > (p_c - p_o)$], then

$$Ps = \frac{C_c}{1+e_0} E \log_{10} \frac{p_c}{p_o}$$

(b) If the load increment is smaller than

$p_c - p_o$ [i.e. $\Delta p < (p_c - p_o)$],

the corresponding equation will be :

$$Ps = \frac{C_c}{1+e_0} E.\mathrm{Log}_{10} \frac{(p_o + \Delta p)}{p_o}$$

Where,

Ps = Secondary settlement

C_c = Compression index

e_o = Initial void ratio

P_c = Pre-consolidation pressure

P_o = Initial effective pressure

E = Thickness of clay layer

Δp = Pressure increment

6.4.2.3 Time rate of Settlement:

The Time Rate of Settlement will be computed in accordance with the provisions of IS:8009 (Pt.I) based on Terzaghi's One Dimensional Consolidation Theory. In practice, the consolidation settlements take place much faster than those predicted from Terzaghi's Consolidation Theory.

Following reasons partly explain the faster rates :

i) Three dimensional consolidation i.e. lateral release of excess pore pressure;
ii) Release of hydrostatic pressure outside the footing area; and
iii) Horizontal permeabilities are usually much higher than the vertical.

Therefore, the rate of settlement should be corrected by factor of three to five times faster. Actual rates of settlements in the area for similar cases will be of great value for the accuracy of prediction for rate of settlement.

Note: 1. Settlement will be computed for the probable/actual sequence of loading and correction for construction period will be allowed as per the provisions of IS:8009 (Pt.I), clause 10.2, Appendix D**.**

2. While computing pressure increment below abutments, due care will be taken to include the pressure increment due to earth fill behind abutment also with the help of appropriate nomograms (IS:8009-Pt.I, clause 8.3, Appendix B).

6.4.3 Allowable bearing pressures:

Allowable bearing pressure will be based on the criteria already elaborated in para 6.1. In cohesive soils since the settlements spread over a long period of time, the measures to tackle the balance / remainder settlements at the time of placement of super-structure should be considered.

6.5 FOUNDATIONS ON ROCK :

6.5.1 Foundations resting on rocky strata shall be designed taking into consideration nature of rock formation, the dip and strike of the rock strata and presence of faults and fissures. Foundations shall not be allowed to rest on faulted strata likely to slip. Fissured strata shall be stabalised by grouting.

6.5.2 The ultimate bearing capacity of homogeneous sound rock may be computed from the shear strength properties in the same way as the bearing capacity for soils. The shear strength may be determined by unconfined compression tests on test samples of rock consisting of cylinders whose heights are at-least twice their diameter. A 5 cm dia x 10 cm high cylinder may be used. The ultimate bearing capacity shall be taken as 4.5 time the unconfined compressive strength.

6.5.3 Allowable Bearing Pressure :

The allowable bearing pressure shall be decided upon after taking into consideration for weakness of the rock strata as mentioned below

(a) Tendency to slide due to sloping rock surface;

(b) Stratification of alternate layers of sound and weak rock;

(c) Presence of joints and the extent of joints;

(d) Planes of weakness such as bedding planes, dykes, faults, cavities, caverns etc.

The extent to which reduction is to be affected in bearing capacity to allow for these weaknesses is a matter of engineering judgement. The allowable bearing pressure for sound homogeneous rock may be determined from the ultimate bearing capacity by adopting a factor of safety of 3.

Note : When the foundation rests on rock, resultant of forces at the base of the foundation shall not fall outside the middle half and the maximum foundation pressure calculated on the reduced area of contact shall not exceed the allowable bearing pressure.

6.6 NON-HOMOGENEOUS & UNSOUND ROCKS :

6.6.1 A factor of safety of 6 to 8 on unconfined compression strength should normally be adequate to cover such rock deficiencies in fixing the allowable bearing pressure.

6.6.2 In the case of badly disintegrated rocks or very soft varieties of rock where the core recovery during boring is found to be less than 35% and test cylinders are not available, the allowable bearing pressure may be assessed by adopting methods prescribed for soil. Guidance of the following Codes with latest edition may be taken :

i) IS:4464 – "Code of Practice for Presentation of Drilling Information and Core Description in Foundation Investigation".

ii) IS:5313 – "Guide for Core Drilling Observations".

iii) IS:6926 – "Code of Practice for Diamond Core Drilling for Site Investigation for River Valley Projects".

iv) IS:11315 (Pt.II) – "Methods of Quantitative Description of Discontinuities in the Rock Masses".

6.7 Permissible Increase In Allowable Bearing Pressure :

6.7.1 When the foundations are checked for combinations of loads as stated in clause 5.13, the allowable bearing pressures on foundations may be increased as follows :

Combination I	- Nil
Combination II &III	- $33\frac{1}{3}$%
Combination IV	- 40%

6.8. Conditions Of Stability :

6.8.1 The following factors of safety shall be ensured for stability under combinations of loads and forces as indicated in clause 5.13.

i) Against overturning -	
Combination I	2.0
Combination II or III	1.5
ii) Against sliding -	
Combination I	1.5
Combination II or III.	1.25

6.9 Design Of Deep Foundations :

6.9.1 The bottom of foundations shall be taken to such a depth as to provide adequate grip below the deepest anticipated scour. The depth of foundations below the water level for the design discharge for foundations shall not be less than 1.33 times of the max. depth of scour. In case, of inerodible strata, such as rock, occurring at higher levels, the structure may be founded at such higher level. The foundation shall not normally rest on sloping rock strata.

6.9.2 In calculating the foundation pressure the effect due to skin pressure (below deepest scour level) between the body of the foundation and the surrounding soil shall also be taken into accounts except in seismic zones IV &V.

6.9.3 For design of deep foundation, dynamic augment need not be considered. For design and analysis of well foundation, the methods described in Appendix-V may be used. The depth of foundations shall be adequate to provide stability against overturning and sliding. Only 50% of the passive earth pressure that can be mobilised on the sides of the well foundations below max. scour level shall be considered while considering stability against overturning.

7. DESIGN AND CONSTRUCTION OF BRIDGE SUB STRUCTURES

7.1 ABUTMENTS

7.1.1 The length of abutments at the top shall normally be equal to the formation width. The width at the top shall be sufficient to accommodate not only the bearings, but also to carry ballast walls. It shall also be sufficient to provide adequate thickness of masonry or concrete beyond the bearings to resist diagonal shearing.

7.1.2 Where pier type abutments are provided without wing walls and return walls, the earthfill around the abutment shall be protected by providing properly designed stone-pitching on the slopes and apron at the toe of the fill.

7.2 PIERS

7.2.1 The length of piers shall be sufficient to provide proper seating for the girders. The width at the top shall be sufficient not only to accommodate the bearings of the girders, but shall also provide sufficient masonry or concrete on the outside of the bearings to resist diagonal shearing.

7.2.2 Where necessary, piers shall be provided at both ends with suitably shaped cut waters which shall extend upto at least 1 m above high flood level, including afflux.

7.3 BED BLOCKS FOR ABUTMENTS AND PIERS

7.3.1 In girder bridges where concentrated loads are transmitted to the substructure, bed blocks of proper design shall be provided on the top of the piers and abutments under the bearings to ensure proper distribution of the superimposed loads over the whole length of the abutment or pier. Such bed blocks may be reinforced cement concrete.

7.4 BUTT JOINTS

7.4.1 In piers and abutments built on shallow open foundations on poor soil, a butt joint shall be provided between the tracks throughout the height of the structure, including the foundations, so as to permit differential settlements. Similar

butt joints shall be provided also near the junction of the wing or return walls and the abutments.

7.4.2 In the case of canal crossings, where there are clean joints between the abutments and the wing/return walls such joints shall be filled up with suitable material like bitumen below the full supply level.

7.5 BACKFILL MATERIAL AND APPROACH SLABS.

7.5.1 Backfill behind abutments, wing walls and return walls.

Behind abutments, wing walls and return walls, boulder filling and backfill materials shall be provided as shown in Fig. 9.

materials of GW, GP, SW groups as per IS : 1498-1970.

7.5.3 Approach slabs : In order to reduce impact effect and to obtain improved running, properly designed approach slabs may be provided on both the approaches of non-ballasted deck bridges having spans 12.2 m or more. One end of the approach slab may be supported on the abutment and other end on the formation. Length of the approach slab shall be minimum 4 meters.

7.6 WEEP HOLES

7.6.1 Weep holes shall be provided through abutments, wing or return walls and parapets as may be necessary with adequate

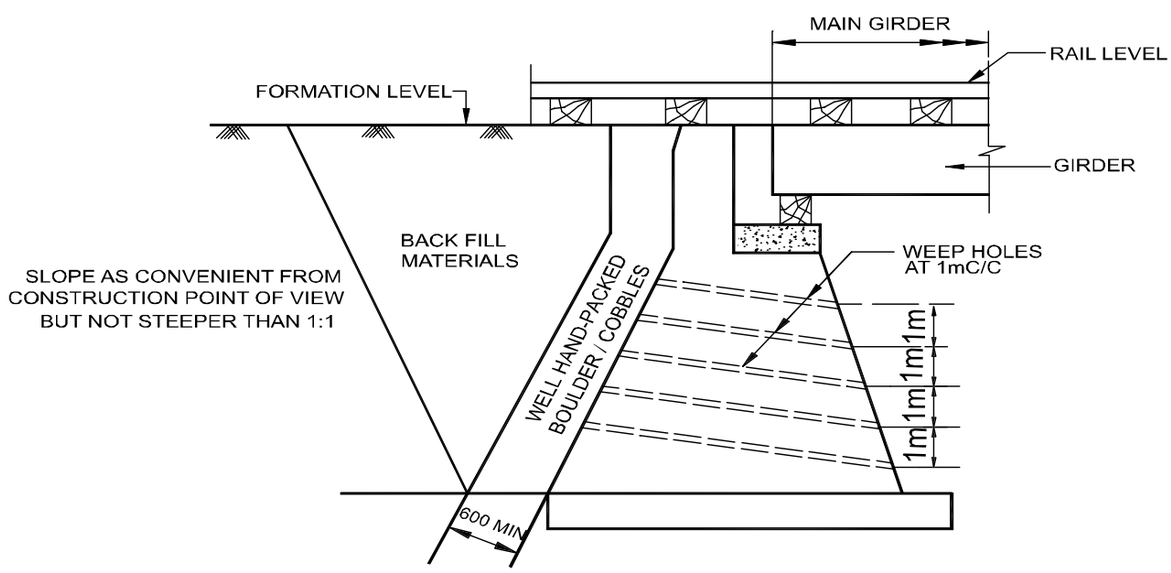

FIG.9

7.5.2 The boulder filling shall consist of well hand-packed boulders & cobbles to thickness not less than 600 mm with smaller size towards the back. Behind the boulder filling, backfill materials shall consist of granular

arrangements being made to lead the water to the weep holes

7.6.2 For abutments of canal crossing culverts, weep holes may be provided only above full supply level. No weep holes need be provided below full supply level. To drain away the water from the backfill of the abutment, wing or return walls, open jointed pipes or boulder drains may be provided at suitable levels.

7.7 APPLICATION OF LOAD

7.7.1 After completion of any portion of the masonry or concrete of a bridge substructure, the following minimum time shall be allowed to elapse before loads as specified in Table 7 may be imposed on that portion of the sub-structure :

TABLE 7

	50% design load	75% design load	Full design load
	In days		
Cement Mortar & Concrete using ordinary cement	**7**	**14**	**28**
Cement Mortar & concrete using Rapid hardening cement	**3**	**7**	**10**

Note :

(1) The expression 'load' means the total calculated load with the appropriate Dynamic augment allowance specified for the speed at which the load is permitted to run.

(2) The above time shall be suitably increased where the mean air temperature is less than 15^{0}C (60^{0}F).

(3) Where rapid hardening cement is used, tests shall be carried out on the cement used so as to ensure that it is of the proper quality, or alternatively works cubes of concrete shall be tested to verify whether the expected cube strength has actually been attained. In case the cement used is found to be not conforming to IS : 8041E or the required work cube strength is not obtained, the time schedule for application of loads shall be modified suitably.

7.8 Surface reinforcement in Plain Cement Concrete in piers and abutments :

The surface reinforcement shall br provided with minimum of 8mm bars @ 200mm center to center in both directions. The cover shall be provided as per requirement of the IRS Concrete Bridge Code.

–––––***–––––

APPENDIX-I
(Clause 4.1)

HYDROLOGICAL INVESTIGATIONS

I. A comprehensive outline of hydrological investigations for collecting the necessary field data for the design of a bridge is given below. The nature and extent of investigations and data to be collected will depend upon the type and importance of the bridge. In the case of minor bridges, the scope of data collection may be reduced to the items marked by an asterisk / as shown below :

*1. Area of catchment.

*2. Shape of catchment (oblong, fan, etc.).

*3. Details of the course of the main stream and its tributaries.

*4. Longitudinal slope of the main stream and average land slope of the catchment from the contours.

*5. Nature of soil in the catchment (rocky, sandy, loamy or clay, etc.).

*6. Extent of vegetation (forest, pasture, cultivated, barren, etc.)

These details can be obtained from the following records :-

(i) Survey of India topo sheets to a scale of 1:50,000.
(ii) Aerial photographs.
(iii) In some cases aerial survey of the catchment may be necessary.

*7. Probable changes that may occur in the catchment characteristics assessed by enquiries from the right sources.

*8. Information from rainfall records of local or nearby rain gauges.

9. Other climatic conditions (like temperature, humidity, snow accumulation, etc.) assessed either from maps issued by or from the India Meteorological Department.

10. Changes in the course of the channel.

11. The nature of the material through which the channel flows (whether it consists of boulder gravel, sand, clay or alluvium).

The description should be based also on actual bore hole particulars.

12. Bank erosion and bed scour observed at the bridge site in the case of alluvial rivers and the nature of the material transported.

13. The maximum observed scour depth caused by the flow in the vicinity of the proposed bridge crossing.

14. A full description of existing bridges (as given below) both upstream and downstream from proposed crossing (including, relief and overflow structures).

14.1 Type of bridge including span lengths and pier orientation.

14.2 Cross-section beneath structure, noting clearance from water level to superstructures and direction of current during floods.

14.3 All available flood history – high water marks with dates of occurrence, nature of flooding, afflux observed, damages and sources of information.

14.4 Photographs of existing bridges, past floods, main channels and flood plains and information as to nature of drift, stream bed and stability of banks.

15. Factors affecting water stage at bridge site :

15.1* High water of other streams joining.

15.2* Particulars of reservoirs and tanks existing or proposed to be constructed and approximate date of construction.

15.3* Flood control projects on the stream or other structures which affect the flow in the stream such as weirs, barrages, training works of other structure, spurs etc.

15.4 Tides, or back flow due to a confluence downstream.

15.5 Character of floods – whether steady, flashy or eddy forming etc.

II. A detailed map showing flood flow patterns, location of proposed bridges, spill openings, if any, and alignment of piers, should be prepared to a suitable scale.

The map should indicate :-

1. Contours at 1m intervals, stream meander, vegetation and man-made improvements, if any.
2. Three cross-sections together with HFL one on the centre line of the proposed bridge, one upstream and one downstream at 100 to 300 interval.

–––––***–––––

APPENDIX-II
[Clause 5.12.6.1(b)]

GRAPHICAL DETERMINATION OF ACTIVE EARTH PRESSURE

1. METHOD

1.1 Make the following construction (See Fig. 10). Draw BB' to make an angle (ϕ - λ) with horizontal. Draw BE to make and angle (90 - δ - α - λ) to BB'. Assume planes of rupture Ba, Bb etc. such that Aa=ab=bc=cd, etc. Make Ba'=a'b'=b'c' etc. on BB' equal to Aa, ab, bc, etc. Draw lines from a', b' etc. parallel to BE to intersect corresponding assumed planes of rupture Ba, Bb etc. Draw the locus of the intersection points (modified Culmann's line). Draw a tangent to the locus parallel to BB'. The distance between the tangent point and BB' measured parallel to BE given the maximum active pressure vector 'X'.

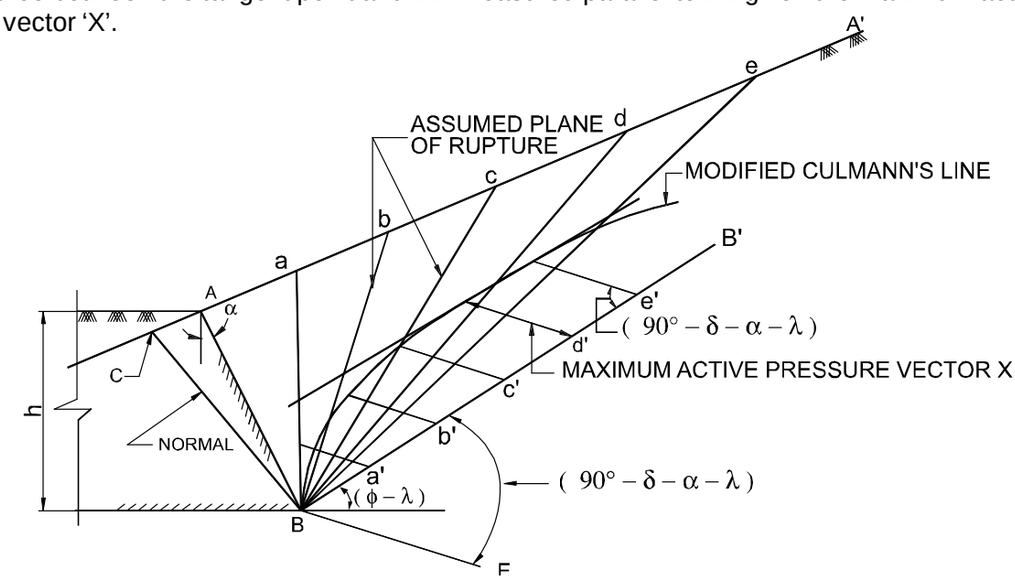

FIG. 10 : DETERMINATION OF ACTIVE EARTH PRESSURE BY GRAPHICAL METHOD

1.2 The active earth pressure shall then be calculated as follows :-

$$P_a = 9.8\left[\frac{1}{2}\left(\frac{1 \pm \alpha_v}{\text{Cos}\,\lambda}\right) W\ X\ BC\right] \text{ in Newtons}$$

Where, $\left(Pa = \frac{1}{2}\left(\frac{1 \pm \alpha_v}{\text{Cos}\,\lambda}\right) W\ X\ BC\right)$ in kg

Where,

X = maximum active earth pressure vector,

BC = perpendicular distance from B to AA' and Pa, W, α_v & λ are as defined in 5.12.6.1.

Note : The above graphical construction can be adopted for non-seismic conditions by assuming λ = 0 and α_v = 0

–––––***–––––

APPENDIX-III
[Clause 5.12.6.2(b)]

GRAPHICAL DETERMINATION OF PASSIVE EARTH PRESSURE

1. METHOD

1.1 Make the following construction (See Fig. 11). Draw BB' to make an angle $(\phi - \lambda)$ with horizontal. Draw BE to make an angle $(90^o - \alpha + \delta + \lambda)$ to BB'. Assume planes of rupture Ba, Bb etc. such that Aa=ab=bc etc. Make Ba'=a'b'=b'c' etc. on BB' equal to Aa, ab, bc, etc. Draw lines from a', b' etc. parallel to BE to intersect corresponding assumed planes of rupture Ba, Bb etc. Draw the locus of the intersection points (modified Culmann's line). Draw a tangent to the locus parallel to BB' measured parallel to BE gives the minimum passive pressure vector 'X'.

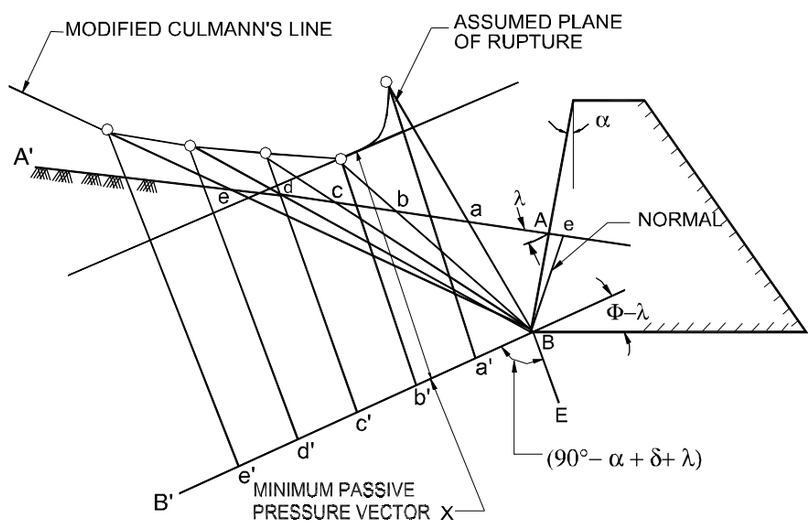

Fig.11: DETERMINATION OF PASSIVE EARTH PRESSURE BY GRAPHICAL METHOD

1.2 The passive pressure shall then be calculated as follows :-

$$P_p = 9.8\left[\frac{1}{2}\left(\frac{1 \pm \alpha_v}{\text{Cos}\,\lambda}\right) W \text{ X } BC\right] \text{ in Newtons}$$

$$P_p = \left(\frac{1}{2}\frac{1 \pm \alpha_v}{\text{Cos}\lambda} W \text{ X } BC\right) \text{ in kg.}$$

where,

X = Minimum passive earth pressure vector,
BC = Perpendicular distance from B to AA' as shown in Fig.11 and
P_p = W, α_v & λ are as defined in 5.12.6.2.

Note : The above graphical construction can be adopted for non-seismic conditions by assuming $\lambda = 0$ and $\alpha_v = 0$.

–––––***–––––

APPENDIX-IV
(Clause 5.14.4)

PROCEDURES FOR LABORATORY AND FIELD TESTS TO DETERMINE PERMISSIBLE STRESSES IN MASONRY.

1. INTRODUCTION

The permissible stresses in compression and tension in stone and brick masonry shall be decided by conducting tests in accordance with procedures detailed below :-

2. TESTS FOR DETERMINATION OF COMPRESSIVE STRENGTH

2.1 The standard test samples shall be of size 50x20x50 cms.

2.2 To facilitate a number of samples being tested on the same reaction frame the pillars shall preferably be constructed in a casting yard. To facilitate transportation the pillars shall be cast on 75mm thick RCC slab with suitable hooks to lift the slab along with the pillars. The pillars shall be cured by damp cloth for a period of 28 days. To avoid damage during transit the pillars shall be transported to the reaction frame by a suitable crane or gantry girder arrangement.

2.3 A reaction frame of suitable design of 150 tonnes capacity shall be devised for the testing of masonry pillars. A schematic diagram of testing masonry pillars is given in figure. The pillars shall be erected on the reaction frame with an RCC capping slab of 75 mm thickness or hard wood block of 150 mm thickness on its top.

The load shall be applied through three rollers each of 60 mm diameter and 450 mm length provided in between two 25 mm thick machined steel plates. The rollers shall be properly greased and correctly centred so that the load is applied concentrically.

2.4 The load shall be applied centrally using hydraulic jacks of 150 tonnes capacity without shock and increased gradually till failure of the pillar occurs. It would be deemed that the pillar has failed when the masonry crumbles and the jack ceases to take load.

–––––***–––––

APPENDIX V
(Clause 6.9.3)

DESIGN AND ANALYSIS OF WELL FOUNDATION:

1. The design of well foundations shall be carried out for either of the following two situations:

i) Wells surrounded by non-cohesive soils, below maximum scour level and resting on non-cohesive soils;

ii) Wells surrounded by cohesive soils or mixed strata below maximum scour level and resting on any strata viz. Cohesive soil, non–cohesive soil or rock.

2. WELLS RESTING ON NON-COHESIVE SOILS

2.1 For wells resting on non-cohesive soils like sand and surrounded by the same soil below a maximum scour level, the design of foundations shall be checked by both Elastic Theory and Ultimate Soil Resistance Methods as given below which are based on IRC:45-1972 **'**Recommendations for Estimating the Resistance of Soil below the maximum scour level in the design of Well Foundation of Bridges.**'** Elastic Theory Method gives the soil pressure at the side and the base under design load, but to determine the actual factor of safety against failure, the ultimate soil resistance is computed.

2.2 Scope

The provisions given below shall not apply if the depth of embedment is less than 0.5 times the width of foundation in the direction of lateral forces.

2.3 Procedure for calculating the soil resistance:

The resistance of soil surrounding the well foundation shall be checked :

i) for calculation of base pressures by the elastic theory with the use of subgrade moduli ; and

ii) by computing the ultimate soil resistance with appropriate factor of safety.

2.4 METHOD OF CALCULATION

2.4.1 Elastic Theory

Step 1: Determine the values of W, H and M under combination of normal loads without wind and seismic loads assuming the minimum grip length below maximum scour level,

Where,

W = total downward load acting at the base of well, including the self weight of well.

H = external horizontal force acting on the well at scour level.

M = total applied external moment about the base of well, including those due to tilts and shifts.

Step 2 : Compute I_B and I_V and I

Where,

I = $I_B + mI_v (1+2\mu' \alpha)$

I_B = moment of inertia of base about the axis normal to direction of horizontal forces passing through its C.G.

I_v = moment of inertia of the projected area in elevation of the soil mass offering resistance =

$$\frac{LD^3}{12}$$

where,

L = projected width of the soil mass offering resistance multiplied by appropriate value of shape factor.

Note: The value of shape factor for circular wells shall be taken as 0.9. For square or rectangular wells where the resultant horizontal force acts parallel to a principal axis, the shape factor shall be unity & where the forces are inclined to the principal axis, a suitable shape factor shall be based on experimental results :

D = depth of well below scour level

m = K_H / K **:** Ratio of horizontal to vertical coefficient of subgrade reaction at base. In the absence of values for K_H and K determined by field tests m shall generally be assumed as unity.

μ' = Coefficient of friction between sides and the soil = tan δ, where δ is the angle of wall friction between well and soil.

$$\alpha = \frac{B}{2D} \text{ for rectangular well}$$

$$= \frac{\text{diameter}}{\pi \text{ D}} \text{ for circular well.}$$

Step 3 : Ensure the following :

$$H > \frac{M}{r} (1+ \mu \mu') - \mu W$$

and $H < M/r (1- \mu \mu') + \mu W$

where,

r = $(D/2) (I / m I_v)$

μ = coefficient of friction between the base and the soil. It shall be taken as tan ϕ

ϕ = angle of internal friction of soil.

Step 4 : Check the elastic state

$mM/I \not> \gamma (K_p - K_A)$

If mM/I is $> \gamma (K_p - K_A)$, find out the grip required by putting the limiting value $mM/I = \gamma (K_p - K_A)$

Where,

γ = density of the soil (submerged density to be taken when under water or below water table)

K_p & K_A = passive and active pressure coefficients to be calculated using Coulomb's theory, assuming 'δ' the angle of wall friction between well and soil equal to 2/3 ϕ but limited to a value of $22\frac{1}{2}^0$.

Step 5 : Calculate

$$\left.\frac{\sigma_1}{\sigma_2}\right\} = \frac{W - \mu' P}{A} \pm \frac{MB}{2I}$$

where,

σ_1 & σ_2= max. and min. base pressure respectively.

A = area of the base of well.

B = width of the base of well in the direction of forces and moments.

P = M/r

P = horizontal soil reaction.

Step 6 : Check $\sigma_2 \not< 0$ i.e. no tension

$\sigma_1 \not>$ allowable bearing capacity of soil.

Step 7 : If any of the conditions in Steps 3, 4 and 6 or all do not satisfy, redesign the well accordingly.

Step 8 : Repeat the same steps for combination with wind and with seismic case separately.

2.4.2 ULTIMATE RESISTANCE METHOD

Step 1 : Check that $W/A \not> \sigma_u/2$

W = total downward load acting at the base of well, including the self weight of well, enhanced by a suitable load factor given vide Step 5.

A = area of the base of well

σ_u = ultimate bearing capacity of the soil below the base of well.

Step 2: Calculate the base resisting moment M_b at the plane of rotation and side resisting moment Ms by the following formulae :

$M_b = QWB \tan \phi$

B = width in case of square and rectangular wells parallel to direction of forces and diameter for circular wells.

Q = a constant as given in Table 1 below for square or rectangular base. A shape factor of 0.6 is to be multiplied for wells with circular base.

ϕ = angle of internal friction of soil.

TABLE -1

D/B	0.5	1.0	1.5	2.0	2.5
Q	0.41	0.45	0.5	0.56	0.64

NOTE : The values of Q for intermediate D/B values in the above range may be linearly interpolated.

$M_s = 0.10\, \gamma\, D^3 (K_P - K_A)\, L$

Where,

Ms = Side resisting moment

γ = density of soil (submerged density to be taken for soils under water or below water table)

L = projected width of the soil mass offering resistance. In case of circular wells. It shall be 0.9 diameter to account for the shape.

D = depths of grip below max. scour level.

K_P , K_A = passive and active pressure coefficient to be calculated using coulomb's Theory assuming "δ" angle of wall friction between well and soil equal to 2/3 ϕ but limited to a value of $22\frac{1}{2}^0$.

Step 3: Calculate the resisting moment due to friction at front and back faces (M_f) about the plane of rotation by following formulae :

(i) For rectangular well

$M_f = 0.18\, \gamma\, (K_P - K_A)\, L.B.D^2 \sin \delta$

(ii) for circular well

$M_f = 0.11\gamma\, (K_P - K_A)\, B^2.D^2 \sin \delta$

Step 4: The total resistance moment M_t about the plane of rotation shall be

$M_t = 0.7\, (M_b + M_s + M_f)$

Step 5 : Check $M_t \not< M$

Where,

M = Total applied external moment about the plane of rotation, viz, located at 0.2D above the base, taking appropriate load factors as per combinations given below :

1.1 D . . . . (1)
1.1 D – B +1.4 (W_c +E_P + W or S) . . . (2)
1.1 D +1.6 L . . . . (3)
1.1 D – B + 1.4 (L + W_c +E_P) . . . . (4)
1.1 D – B + 1.25 (L + W_c +E_P + W or S) (5)

Where,

D = Dead load.
L = Live load including tractive/braking etc.
B = Buoyancy
W_c = Water current force
E_p = Earth pressure
W = Wind force
S = Seismic force

Note : Moment due to shift and tilt of wells and piers and direct loads, if any, shall also be considered about the plane of rotation.

Step 6 : If the conditions in steps 1 and 5 are not satisfied, redesign the well.
Note : Notation, symbols given in the clause 3.0 of Bridge Substructure & Foundation Code, Revised in 1985 are not applicable for the above Appendix-V.

3.0 WELLS RESTING ON COHESIVE SOILS

3.1 For wells founded in clayey strata and surrounded by clay below max. scour level, the passive earth pressure shall be worked out by C & ϕ parameters of the soil as obtained from UU (unconsolidated undrained) test and for stability against overturning, only 50% of the passive earth pressure will be assumed to be mobilised (Refer clause 6.9.3).

3.2 In wells through clayey strata, the skin friction will not be available during the whole life of the structure, hence support from skin friction should not be relied upon.

4. SETTLEMENT OF WELL FOUNDATION

4.1 The settlement of well foundation may be the result of one or more of the following cases :

a) Static loading,
b) Deterioration of the foundation structure;
c) Mining subsidence; and
d) Vibration subsidence due to underground erosion and other causes.

4.2 Catastrophic settlement may occur if the static load is excessive. When the static load is not excessive, the resulting settlement may be due to the following :

a) Elastic compression of the foundation structure;
b) Slip of the foundation structure relative to the soil;
c) Elastic deformation or immediate settlement of the surrounding soil and soil below the foundation structure ;

d) Primary consolidation settlement of the surrounding soil;
e) Primary consolidation settlement of the soil below the foundation structure.
f) Creep of the foundation structure under the constant axial load; and
g) Secondary compression of the surrounding soil and soil below the foundation structure.

4.3 If a structure settles uniformly, it will not theoretically suffer damage, irrespective of the amount of settlement. In practice, settlement is generally non-uniform. Such non-uniform settlements induce secondary stresses in the structure. Depending upon the permissible extent of these secondary stresses, the settlements have to be limited. Alternatively, if the estimated settlements exceed the allowable limits, the foundation dimensions or the design shall be suitably modified.

4.4 The following assumptions are made in settlement analysis :

a) The total stresses induced in the soil by the construction of the structure are not changed by the settlement;

b) Induced stresses on soil layers due to imposed loads can be estimated, and

c) The load transmitted by the structure to the foundation is static and vertical.

In the present state of knowledge, the settlement computations at best estimate the most probable magnitude of settlement.

4.5 It is presumed that the load on the foundation will be limited to a safe bearing capacity and, therefore, catastrophic settlements are not expected. Settlement due to deterioration of foundations, mining and other causes cannot, in the present state of knowledge, be estimated. Such methods are not also available for computation of settlement due to the slip of foundation structure with reference to the surrounding soils and, therefore, not covered.

4.6 Wells Founded In Cohesionless Soil :

For wells constructed in cohesionless soils, the settlement due to dead load of sub-structure will take place by the time the construction is completed and the necessary adjustment in the final level can be made before erection of the girder. In such cases, settlement shall be evaluated only for the dead load of the super-structure.

4.7 Wells Founded In Cohesive Soil :

When wells are founded in cohesive soil, the total settlement will be computed as per the provisions of clause 6.4. The settlements in clay occur over a long period and time rate of settlement will be computed as per the provisions of clause 6.4.2.3.

–––––***–––––

APPENDIX-V(i)

LIST OF FLOOD ESTIMATION REPORTS

(Clause 4.3.4)

S.No	Name of the sub-zones	Flood Estimation Report No.(Published by CWC)
A.	For medium size catchment (i.e. area 25 sq km or more but less than 2500 sq km)	
1.	Luni Sub-Zone 1(a)	L-20/1993
2.	Chambal Sub-Zone 1(b)	C/16/1988
3.	Belwa Sub-Zone 1(c)	B/17/1989
4.	Sone Sub-Zone 1(d)	S/15/1987
5.	Upper Indo-Ganga Plains Sub-Zone 1(e)	UGP/9/1984
6.	Middle Ganga Plains Sub-Zone 1(f)	GP/10/1984
7.	Lower Ganga Plains Sub-Zone 1(g) (Revised)	LG-1(g)/R-1/23/94
8.	North Brahmaputra Basin Sub-Zone 2(a)	NB/18/1991
9.	South Brahmaputra Basin Sub-Zone 2(b) (Revised)	SB-2(b)/R-4/44/99
10.	Mahi and Sabarmati Sub-Zones 3(a)	M5/13/1986
11.	Lower Narmada and Tapi Sub-Zone 3(b) (Revised)	LNT/3(b)/R-7/47/2004
12.	Upper Narmada and Tapi Sub-Zone 3(c) (Revised)	UNT -3(c)/R-6/46/2002
13.	Mahanadi Sub-Zone 3(d) (Revised)	M-3(d)/R-3/25/97
14.	Upper Godavari Sub-Zone 3(e)	CB/12/1985
15.	Lower Godavari Sub-Zone 3(f)	LG-3(f)/R-2/24/95
16.	Indravati Sub-Zone 3(g)	1-21/1993
17.	Krishna and Pennar Basins Sub-Zone 3(h) (Revised)	KP-3(h)/R-5/45/2000
18.	Kaveri Basin Sub-Zone 3(i)	CB/11/1985
19.	Eastern Coasts Region (Upper, Lower and South) Sub-Zones 4(a, b & c)	EC(U,L&S)/14/1986
20.	West Coast Region Kokan and Malabar Coasts Sub-Zones 5(a &b)	K&M/19/1992
21.	Flood Estimation Report for Western Himalayan Zone -7	WH/22/1994
B:	For small size catchments (i.e. area less than 25 sq km)	
1.	Flood Estimation Methods for Catchments less than 25 km^2 in Area.	RBF-16 (Published by RDSO)

–––––***–––––

APPENDIX –V (ii)
(Clause 4.3.4)

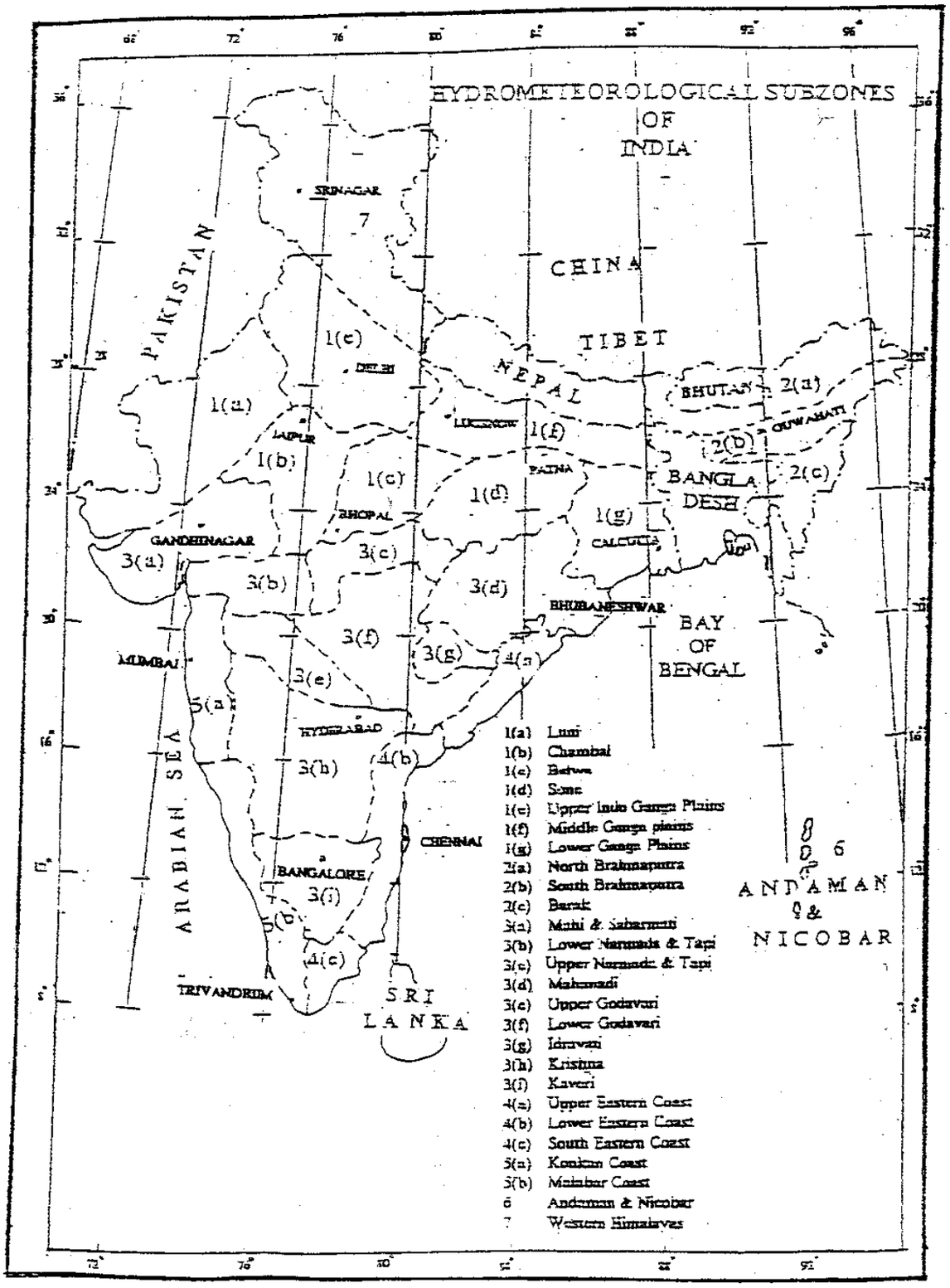

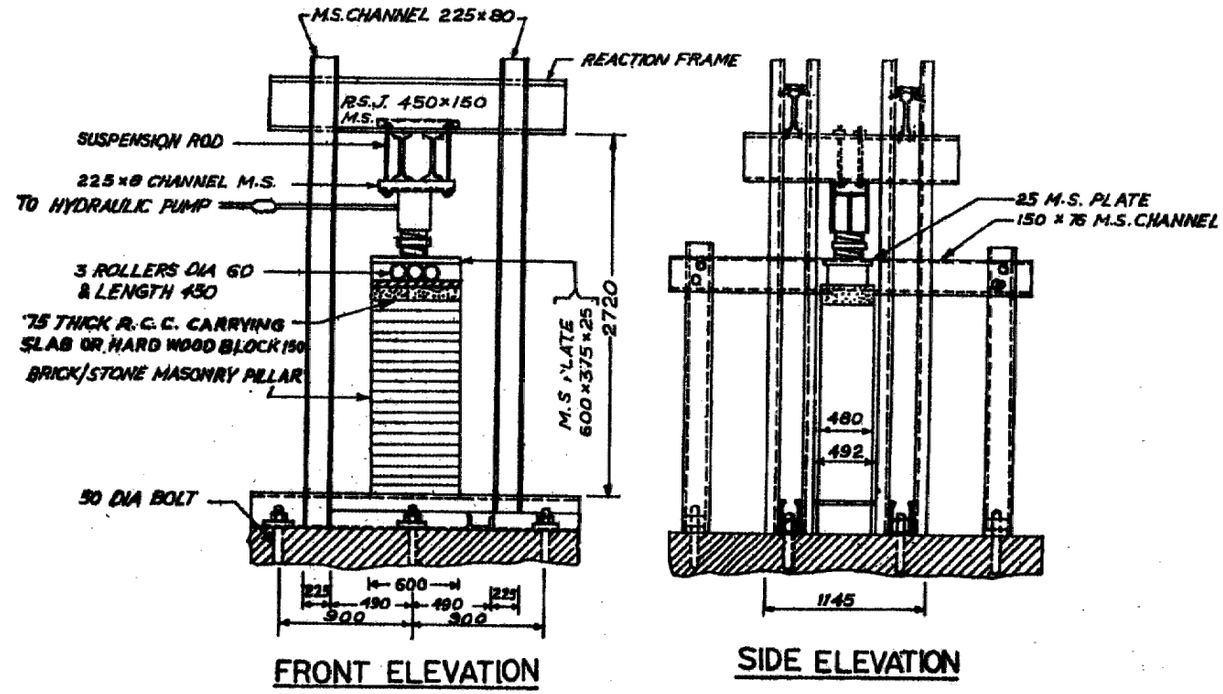

FRONT ELEVATION

SIDE ELEVATION

NOTE

1. ALL DIMENSIONS ARE IN MILLIMETRES
2. THE CAPACITY OF REACTION FRAME SHOULD BE 150 TONNES

R. D. S. O.
LOADING ARRANGEMENTS FOR TESTING OF PILLARS
EDO/B-1994

TRACED BY :- (S. A. KHAN) CHECKED BY

Notes

Notes