सत्यमेव जयते

GOVERNMENT OF INDIA
MINISTRY OF RAILWAYS
(Railway Board)

INDIAN RAILWAY STANDARD

CODE OF PRACTICE FOR PLAIN, REINFORCED & PRESTRESSED CONCRETE FOR GENERAL BRIDGE CONSTRUCTION

(CONCRETE BRIDGE CODE)

ADOPTED –1936
FIRST REVISION -1962
SECOND REVISION - 1997
REPRINT - SEPTEMBER 2014 (INCORPORATING A&C 1 to 13)

ISSUED BY

RESEARCH DESIGNS AND STANDARDS ORGANISATION
LUCKNOW - 226011

INDIAN RAILWAY STANDARD
CODE OF PRACTICE FOR
PLAIN, REINFORCED AND PRESTRESSED CONCRETE
FOR GENERAL BRIDGE CONSTRUCTION

(CONCRETE BRIDGE CODE)

(SECOND REVISION)

0. FOREWARD

0.1 IRS Concrete Bridge Code was first adopted in 1936. The code was subsequently revised in 1962 under title "Code of Practice for Plain, Reinforced and Prestressed Concrete for General Bridge Construction". This code was in agreement with the accepted practice at that time. However, due to various developments that have taken place in understanding the behavior of structures, most of the international codes of practice have been revised to update them as per the current state of the art.

0.2 The proposal of revision of IRS Codes to bring them in line with international codes was discussed in 62nd BSC meeting held in June 1985. On its recommendations, Railway Board vide their letter no. 85/W-1/BR-I/33 dated 19-2-87 ordered that revision of IRS Codes relating to Bridges should be taken up. Accordingly, the second revision of IRS Concrete Bridge Code was taken in hand.

0.3 To expedite revision, Railway Board vide their letter no. 86/W-1/BR-1/45 (Vol. II) dated 29-7-1988 nominated a committee comprising the following officers:

1. Director, IRICEN, Pune.
2. Director Stds. (B&S)/RDSO.
3. Dr. M.Mani, CE (Constn.)/MTP. Central Railway.
4. Shri G.R.Madan, CBE/Central Railway.

Subsequently, Dr. M. Mani represented as CE (Constn.)/MTP, Central Railway and Shri G.R.Madan as CBE/Central Railway.

0.4 The following officers represented on Concrete Bridge Code revision committee from time to time:

(a)	Director Stds. (B&S)/RDSO	-	Dr. S.R.Agarwal Sh. Arvind Kumar Sh. G.P.Garg
(b)	Director, IRICEN, Pune	-	Sh. M.Ravindra Sh. P.S.Subramanian Sh.S.Gopalakrishnan
(c)	CE (Constn.)/MTP, Central Railway	-	Dr. M.Mani Sh. P.C.Bhargava
(d)	CBE/Central Railway	-	Sh. G.R.Madan Sh. O.P.Agarwal Sh. Uttam Chand

The above committee was assisted in drafting and finalization of the code by Shri M.S.Sulaiman, Dr. Bala Krishnan, S/Shri Srihari, Prashant Kumar, A.S.Garud, S.M.Vaidya, Sanjiv Roy, Surendra Kumar and S.L.Gupta.

0.5 The second revised standard was adopted on Indian Railways after the draft finalized by the Committee was discussed in 13th EXTRA ORDINARY BSC November 1996 and approved By Railway Board.

0.6 Although IRS Concrete Bridge Code was last revised in 1962, it was modified and updated to certain extent by means of addendum and corrigendum slips issued from time to time. The second revision incorporates a number of important changes. The major thrust in the revision is on following areas:-

0.6.1 Introduction of limit state method including load factors and material safety factors.

The earlier version of IRS Concrete Bridge Code was based on working stress method of design. Some of the international codes on bridges like BS 5400, DIN 1045, CEB-FIP etc. have adopted the limit state method of design which considers various aspects of design viz. strength, deflections, cracking and ensure adequate degree of safety and serviceability of the structure. The probability of variation in both loads and material properties are well recognized in the method. These aspects make this method of design more logical and scientific.

0.6.2 **Fatigue Criteria**: In case of concrete bridges, fatigue strength is considered only in respect of reinforcement bars that have been subjected to welding. In this revision a method of assessment of fatigue of concrete bridges having welded reinforcement has been introduced. Assessment has been done without damage calculation.

0.6.3 **Units for Adoption**: In earlier revision although SI units were adopted but their equivalent MKS units were also given in brackets. Since users are now familiar with SI systems of units, which is not very much different from MKS units, only SI system of unit has been adopted deleting the MKS equivalents.

0.6.4 **Symbols**: with the introduction of limit state design new symbols have been added. As the user will be dealing with other IS & IRS Codes also, attempt has been made to use same symbols as far as possible.

0.6.5 **Acceptance Criteria for Concrete**: In the earlier revision, quality control criteria for concrete differed from the approach adopted in Preliminary Draft Revision IS: 456-1978. As limit state design uses the concept of characteristic strength with 95% confidence level, the mean strength used in earlier revision will not be helpful. This necessitates the use of statistical approach for quality control involving the concept of sampling and acceptance criteria adopted as given in Preliminary Draft Revision IS: 456-1978.

0.6.6 Certain supplemental measures for design and durability of concrete like specification of various materials used in making concrete, w/c ratio, cement content, minimum grade of concrete, exposure condition, tolerances for finished concrete structure, concrete cover etc. have also been incorporated in this revision.

0.7 While revising this code, guidance has been taken from different international and national code. The committee derived assistance from the following in the order of decreasing importance:

(a) BS: 5400
(b) IS Codes.
(c) IRS Codes.
(d) Other Codes like CEB-FIP, DIN etc.

Contents

APPENDICES

TABLES

Page

INDIAN RAILWAY STANDARD
CODE OF PRACTICE FOR
PLAIN, REINFORCED AND PRESTRESSED CONCRETE
FOR GENERAL BRIDGE CONSTRUCTION

(CONCRETE BRIDGE CODE)
(Second Revision)
Reprinted- September 2014, (incorporating A&C 1 to 13)

1. SCOPE

1.1 This Code of Practice applies to the use of plain, reinforced and prestressed concrete in railway bridge construction. It covers both in-situ construction and manufacture of precast units. The Code gives detailed specifications for materials and workmanship for concrete, reinforcement and prestressing tendons used in the construction of railway bridges. After defining the loads, forces and their combinations and requirements for the limit state design, particular recommendations are given for plain concrete, reinforced concrete and prestressed concrete bridge construction.

1.2 For road bridges, the design and construction shall comply with the standard specifications and codes of practice for road bridges issued by Indian Roads Congress.

1.3 It is recommended that the officials involved in the construction of concrete bridges are in possession of the codes/specification referred in this code.

1.4 Any revision or addition or deletion of the provisions of this Code shall be issued only through the correction slip to this Code. No cognizance shall be given to any policy directives issued through other means.

2. TERMINOLOGY

2.1 For the purpose of this code, the definitions given in IS: 4845 and IS: 6461 (Parts I to XII) shall generally apply. However, the commonly used definitions are reproduced below.

Access Door – (Access Trap or Inspection Door or Porthole or Trap Door)- A removable panel in the form work for a high lift to give access for inspection or for placing or compacting concrete.

Admixture – A material other than water, aggregates and hydraulic cement, used as an ingredient of concrete or mortar, and added to the batch immediately before or during its mixing to modify one or more of the properties of concrete.

Aggregate coarse – Crushed stone or crushed boulders, gravel or such other inert materials, conforming generally to IS: 383.

Aggregate Fine – Natural sand or sand prepared from crushed stone, gravel or such other inert materials, conforming generally to IS: 383.

Air-Entraining – The capability of a material or process to develop a system of minute bubbles of air in cement paste, mortar or concrete.

Anchorage – A device or provision enabling the prestressing tendon to impart and maintain the prestress in the concrete.

Anchorage Zone – In post tensioning, the region adjacent to the anchorage subjected to secondary stresses resulting from the distribution of the prestressing force, in pre-tensioning, the region in which the transfer bond stresses are developed.

Bar, Deformed – A reinforcing bar with manufactured surface deformations, which provide a locking anchorage with surrounding concrete.

Batching – Weighing or volumetrically measuring and introducing into the mixer the ingredients for a batch of concrete or mortar.

Bleeding – The autogenous flow of mixing water within or its emergence from newly placed concrete or mortar caused by the settlement of the solid materials within the mass or drainage of mixing water also called water gain.

Camber – The intentional curvature of a beam or formwork, either formed initially to compensate for subsequent deflection under load or produced as a permanent effect for aesthetic reasons.

Cementitious Material – Cementitious material means cement or cement mixed with mineral admixtures like Pozzolanic Fly Ash (PFA), Grounded granulated blast furnace slag (GGBFS), micro silica etc.

Chamfer –

(a) The surface produced by the removal, usually symmetrically of an external edge.

(b) Beveled corner, which is formed in concrete work by placing a three-corner piece of wood (cant strip or skew back) in the form corner.

Chute – A sloping trough or tube for conducting concrete cement aggregate or other free flowing materials from a higher to a lower point.

Coating – Material applied to a surface by brushing, dipping, mopping, spraying, toweling etc. such as to preserve, protect, decorate, seal, or smooth the substrate.

Cold Joint – A joint or discontinuity formed when a concrete surface hardens before the next batch is placed against it, characterized by poor bond unless necessary procedures are observed.

Column Long – A column having a ratio of effective column length to least lateral dimension greater than 12.

Column or Strut – A compression member the length of which exceeds three times its least lateral dimension.

Column Short – A column having a ratio of effective column length to least lateral dimension not exceeding12.

Column Composite – A concrete column with a core of structural steel or cast iron designed to carry portion of the column load.

Column, Effective Length – The effective length of column determined as under 15.6.1.2 and table-18.

Composite Construction – A type of construction made up of different materials, for example, concrete and structural steel or of members produced by different methods, for example, in-situ concrete and precast concrete.

Concrete – A mixture of cementitious material, water, fine and coarse aggregates with or without admixtures.

Concrete Pump – An apparatus which forces concrete to the placing position through a pipe line or hose.

Concrete Vibrating Machine – A machine commonly carried on side forms or on rails parallel thereto, which compacts a layer of freshly mixed concrete by vibration.

Consistency –The relative plasticity of freshly mixed concrete or mortar, and a measure of its workability.

Construction Joint – The interface between adjacent concrete pours which are designed to act monolithically in the completed structure.

Contraction Joint – A plane, usually vertical, separating concrete in a structure or pavement, at designed location such as to interfere least with performance of the structure, yet such as to prevent formation of objectionable shrinkage cracks elsewhere in the concrete.

Core of Helically Reinforced Column – The portion of the concrete enclosed within the central line of the helical reinforcement.

Coring – The act of obtaining cores from concrete structures or rock foundations.

Corrosion – Disintegration or deterioration of concrete or reinforcement by electrolysis or by chemical attack.

Cover (Reinforced Concrete) – The least distance between the surface of the reinforcement and the face of the concrete.

Cracking Load – The total load causing the first visible crack.

Creep in Concrete – Progressive increase in the plastic deformation of concrete under sustained loading.

Creep in Steel – Progressive decrease of stress in steel at constant strain.

Cube Strength – The load per unit area at which a standard cube fails when tested in a specified manner.

Curing of Concrete – Maintenance of moisture conditions to promote continued hydration of cement in the concrete.

Cyclopean Concrete – Mass concrete in which large stones, each of 50 kg or more, are placed and embedded in the concrete as it is deposited; the stones are called 'pudding stones' or 'plums', preferably not less than 15cm apart and not closer than 20cm to any exposed surface.

Dead Load – The dead load is the weight of structure itself together with permanent load carried thereon.

Effective Area of Reinforcement – The area obtained by multiplying the normal cross-sectional area of the reinforcement by the cosine of the angle between the direction of the reinforcement and the direction in which the effectiveness is required.

Effective Depth of a Beam – The distance between the centroid of the area of tensile reinforcement and the maximum compression fibre.

Falsework –

(a) Falsework is the temporary structure erected to support work in the process of construction. It is composed of shores, formwork for beams or slabs (or both), and lateral bracing.

(b) That part of formwork, which supports the forms usually for a large structure, such as a bridge.

Fatigue Strength – The greatest stress, which can be sustained for a given number of stress cycles without failure.

Final Prestress – The residual prestress in the concrete after deduction of all losses, such as those due to shrinkage, creep, slip, friction and elastic compression, from the initial prestress.

Final Tension – The tension in the steel corresponding to the state of the final prestress.

Formwork (Shuttering) – Complete system of temporary structure built to contain fresh concrete so as to form it to the required shape and dimensions and to support it until it hardens sufficiently to become self-supporting. Formwork includes the surface in contact with the concrete and all necessary supporting structure.

Free Fall – Descent of freshly mixed concrete into forms without drop chutes or other means of confinement; also the distance through which such descent occurs: also uncontrolled fall of aggregate.

Live Load – The temporary forces applied to formwork by the weights of men and construction equipment or the service load due to railway loading or roadway loading.

Loss of Prestress – The reduction of the prestressing force which results from the combined effects of creep in the steel and creep and shrinkage of the concrete, including friction losses and losses due to elastic deformation of the concrete.

Membrane Curing – A process that involves either liquid sealing compound (for example, bituminous and paraffinic emulsions, coal tar cut backs, pigmented and non-pigmented resin suspensions, or suspensions of wax and drying oil) or non-liquid protective coating (for example, sheet plastics or water proof paper), both of which types function as films to restrict evaporation of mixing water from the fresh concrete surface.

Mixing Time –The period during which the constituents of a batch of concrete as mixed by a mixer, for a stationary mixture, time is given in minutes from the completion of mixer charging until the beginning of discharge; for a truck mixer, time is given in total minutes at a specified mixing speed or expressed in terms of total revolutions at a specified mixing speed.

Plain Concrete – Concrete without reinforcement or concrete that does not conform to the definition of reinforced concrete.

Plum – A large random shaped stone dropped into freshly placed mass concrete.

Pumped Concrete – Concrete which is transported through hose or pipe by means of a pump.

Ready Mixed Concrete (RMC) – Concrete produced by completely mixing cement, aggregates, admixtures, if any, and water at a Central Batching and Mixing Plant and delivered in fresh condition at site of construction.

Reinforcement – Metal bars, wires or other slender members, which are embedded in concrete in such a manner that the metal and the concrete act together in resisting forces.

Rubble – Rough stone of irregular shape and size broken from larger masses by geological process or by quarrying.

Segregation – The differential concentration of the components of mixed concrete, resulting in non-uniform proportions in the mass.

Sheath – An enclosure in which post-tensioned tendons are encased to prevent bonding during concrete placement.

Slump – A measure of consistency of freshly mixed concrete mortar, or stucco equal to the subsidence measured to the nearest 6mm of the moulded truncated cone immediately after removal of the slump cone.

Splice – Connection of one reinforcing bar to another by overlapping, welding, mechanical end connectors, or other means.

Strand – A prestressing tendon composed of a number of wires most of which are twisted about a center wire of core.

Stress Corrosion – Corrosion of a metal accelerated by stress.

Sulphate Attack – Harmful or deleterious chemical or physical reaction or both between sulphates in soil or groundwater and concrete or mortar, primarily the cement paste matrix.

Sulphate Resistance – Ability of concrete or mortar to withstand sulphate attack.

Tamper – A timber or metal beam spanning between edge forms or screed rails and used for compacting concrete.

Tensile Strength – The maximum load reached in a tensile test divided by the original cross-sectional area of the gauge length portion of the test piece. Also termed as maximum stress, or ultimate tensile stress.

Tremie – A pipe or tube through which concrete is deposited under water, having at its upper end a hopper for filling and a bail by means of which the assembly can be handled by a derrick.

Vibrator – An oscillating machine used to agitate fresh concrete so as to eliminate gross voids including entrapped air but not entrained air and produce intimate contact with form surfaces and embedded materials.

Water Cement Ratio –The ratio of amount of water, exclusive only of that absorbed by the aggregates, to the amount of cement in a concrete or mortar mixture; preferably stated as a decimal by weight.

Wobble Coefficient –A coefficient used in determining the friction loss occurring in post-tensioning, which is assumed to accounts for the secondary curvature of the tendons.

Yield Strength –The stress, less than the maximum attainable stress, at which the ratio of stress to strain has dropped well below its value at low stress, or at which a material exhibits a specified limiting deviation from the usual proportionality of stress to strain.

Yield Stress – Stress (that is, load per unit cross-sectional area) at which elongation first occurs in the test piece without increasing the load during tensile test. In the case of steels with no such definite yield point, the yield stress is the stress under the prescribed testing conditions at which the observed increase in the gauge length is 1/200 of the gauge length when the rate at which the load is applied is not more than 0.5 kg/mm^2 when approaching the yield stress.

3. SYMBOLS

A_c area of concrete

A_{cf} area of effective concrete flange

A_{con} contact area

A_{cor} area of core of the concrete section

A_e area of fully anchored reinforcement per unit length crossing the shear plane

A_o area enclosed by the median wall line

A_{ps} area of prestressing tendons in the tension zone

A_s area of tension reinforcement

$A_{s'}$ area of compression reinforcement

A'_{s1} area of compression reinforcement in the more highly compressed face

A'_{s2} area of reinforcement in other face

A_{sc} area of longitudinal reinforcement (for columns)

A_{sL} Cross-sectional area of one bar of longitudinal reinforcement provided for torsion.

A_{st} Cross-sectional area of one leg of a closed link

A_{sup} supporting area

A_{sv} Cross-sectional area of the legs of a link

A_t area of reinforcement in a particular direction

a Centre to center distance between bars

a' distance from compression face to point at which the crack width is being calculated

a_{cent} distance of the centroid of the concrete flange from the centroid of the composite section

a_{cr} distance from the point (crack) considered to surface of the nearest longitudinal bar

a_v distance between the line of action or point of application of the load and the critical section or supporting member

b width or breadth of section

b_a average breadth of section excluding the compression flange

b_c breadth of compression face

b_{col} width of column

b_s width of section containing effective reinforcement for punching shear

b_t breadth of section at level of tension reinforcement

b_w breadth of web or rib of a member

c_{nom} nominal cover

d effective depth to tension reinforcement

d' depth of compression reinforcement

d_c depth of concrete in compression

d_e effective depth for a solid slab or rectangular beam, otherwise the overall depth of the compression flange

d_o depth to additional reinforcement to resist horizontal loading

d_t effective depth from the extreme compression fiber to either the longitudinal bars around which the stirrups pass or the centroid of the tendons, whichever is the greater

d_2 depth from the surface to the reinforcement in the other face

E_c static secant modulus of elasticity of concrete

E_{cf} modulus of elasticity of flange concrete

E_s modulus of elasticity of steel

$(EI)_c$ flexural rigidity of the column cross-section

E_{28} secant modulus of elasticity of the concrete at the age of 28 days

e eccentricity

e_x resultant eccentricity of load at right-angels to plane of wall

F_{bst} tensile bursting force

F_{bt} tensile force due to ultimate loads in bar or group of bars

F_h maximum horizontal ultimate load

F_v maximum vertical ultimate load

f stress

f_{bs} local bond stress

f_{cav} average compressive stress in the flexural compressive zone

f_{ci} concrete strength at (initial) transfer

f_{cj} stress in concrete at application of an increment of stress at time j

f_{ck} characteristic compressive strength of concrete

f_{cp} compressive stress at the centroidal axis due to prestress

f_{cr} flexural strength of concrete

f_{pb} tensile stress in tendons at (beam) failure

f_{pe} effective prestress (in tendon)

f_{pt} stress due to prestress

f_{pu} characteristic strength of prestressing tendons

f_{s2} stress in reinforcement in other face

f_i maximum principal tensile stress

f_y characteristic strength of reinforcement

f_{yc} design strength of longitudinal steel in compression

f_{yL} characteristic strength of longitudinal reinforcement

f_{yv} characteristic strength of link reinforcement

h overall depth (thickness) of section (in plane of bending)

h_{agg} maximum size of aggregate

h_e effective thickness

hf thickness of flange

h_{max} larger dimension of section

h_{min} smaller dimension of section

h_{wo} wall thickness where the stress is determined

h_x overall depth of the cross-section in the plane of bending M_{iy}

h_y overall depth of the cross-section in the plane of bending M_{ix}

I second moment of area

K a factor depending on the type of duct or sheath used

k_r depends on grade of reinforcement

k_l depends on the concrete bond across the shear plane

L_s length of shear plane

l distance from face of support at the end of a cantilever, or effective span of a member

l length of the specimen

l_e effective height of a column or wall

l_{ex} effective height for bending about the major axis

l_{ey} effective height for bending about the minor axis

l_o clear height of column between end restraints

l_{sb} length of straight reinforcement beyond the intersection with the link

l_t transmission length

M bending moment due to ultimate loads

M_a increased moment in column

M_{cr} cracking moment at the section considered

M_{cs} hogging restraint moment at an internal support of a continuous composite beam and slab section due to differential shrinkage

M_g moment due to permanent load

M_i maximum initial moment in a column due to ultimate loads

M_{ix} initial moment about the major axis of a slender column due to ultimate loads

M_{iy} initial moment about the minor axis of a slender column due to ultimate loads

M_q moment due to live loads

M_{tx} total moment about the major axis of a slender column due to ultimate loads.

M_{ty} total moment about the minor axis of a slender column due to ultimate loads.

M_u ultimate moment of resistance

M_{ux} ultimate moment capacity in a short column assuming ultimate axial loads and bending about the major axis only

M_{uy} ultimate moment capacity in a short column assuming ultimate axial loads and bending about the minor axis only

M_x, M_y moment about the major and minor axis of a short column due to ultimate loads

M_1 smaller initial end moment due to ultimate loads (assumed negative if the column is bent in double curvature)

M_2 larger initial end moment due to ultimate loads (assumed positive)

n number of sample test results

n_w ultimate axial load per unit length of wall

P ultimate axial load on the section considered

P_h horizontal component of the prestressing force after all losses

P_k basic load in tendon

P_o initial prestressing force in the tendon at jacking end on at tangent point near jacking end

P_u ultimate axial load resistance

P_x Prestressing force at distance x from jack

P_{uz} axial loading capacity of column ignoring all bending

Q^* design load

Q_k nominal load

r internal radius of bend

r_{ps} radius of curvature of a tendon

S^* design load effects

s depth factor

S_d estimated standard deviation

S_L spacing of longitudinal reinforcement

S_v spacing of links along the member

T torsional moment due to ultimate loads.

u perimeter

u_s effective perimeter of tension reinforcement

V shear force due to ultimate loads

V_a premeasured quantity of water in a measuring cylinder

V_b balance quantity of water left in the cylinder after completely filling of the test sample

V_c ultimate shear resistance of concrete

V_p actual volume

V_{co} ultimate shear resistance of a section un-cracked in flexure

V_{cr} ultimate shear resistance of a section cracked in flexure

V_l longitudinal shear force due to ultimate load

V_{ux} ultimate shear capacity of a section for the x-x axis

V_{uy} ultimate shear capacity of a section for the y-y axis

V_x applied shear due to ultimate loads for the x-x axis

V_y applied shear due to ultimate loads for the y-y axis

v shear stress

v_c ultimate shear stress in concrete

v_t torsional shear stress

v_{tmin} minimum ultimate torsional shear stress for which reinforcement is required

v_{tu} ultimate torsional shear stress

x neutral axis depth

x_l smaller center line dimension of a link

y distance of the fibre considered in the plane of bending from the centroid of the concrete section

y_o half the side of end block

y_{po} half the side of loaded area

y_l larger center line dimension of a link

z lever arm

α_n Coefficient as a function of column axial load

α_1 Angle between the axis of the design moment and the direction of the tensile reinforcement

α_2 Angle of friction at the joint

β_{cc} Ration of total creep to elastic deformation

Y_{f1} Y_{f2} Y_{f3} partial load factors

Y_{fL} product of Y_{f1} Y_{f2}

Y_m partial safety factor for strength

Δ deviation of individual test strength from the average strength of n samples

ε strain

ε_{diff} differential shrinkage strain

ε_m average strain

ε_s strain in tension reinforcement

ε_l strain at level considered

ϕ_s angle between the compression face and the tension reinforcement

Y_w coefficient for wall dependent upon concrete used

μ coefficient of friction

ΣA_{sv} area of shear reinforcement

Σ_{us} sum of the effective perimeters of the tension reinforcement

ϕ size (Nominal diameter) of bar or tendon or internal diameter of the sheathing

Q creep coefficient

Q_1 creep coefficient for prestressed construction

4. MATERIALS

4.1 Cement

4.1.1 The cement used shall be any of the following, with the prior approval of the engineer:

(a) 33 Grade Ordinary Portland cement conforming to IS:269.

(b) 43 Grade Ordinary Portland cement conforming to IS:8112.

(c) 53 Grade Ordinary Portland cement conforming to IS:12269.

(d) Rapid hardening Ordinary Portland cement conforming to IS:8041.

(e) High strength Portland cement conforming to IRS:T:40.

(f) Portland slag cement conforming to IS:455 (see Note 1,4,5 & 6 below).

(g) Portland pozzolana cement conforming to IS:1489 (see Note 2,4,5 & 6 below).

(h) Sulphate resistance cement conforming to IS:12330 (see Note 3 below).

Note:1 Mixing of 50% blast furnace slag with OPC cement at site shall not normally be permitted. However, in exceptional cases for bridges requiring higher levels of durability using blended cement which is not available from manufacturers, blending at site may be permitted subject to ensuring dedicated facilities and complete mechanized process control to achieve specified quality with the special permission of **PCE/CE (Coordination) or CAO (Con)**.

Note:2 Portland Pozzolana cement shall not be used for PSC works. When Portland Pozzolana cement is used in plain and reinforced concrete, it is to be ensured that proper damp curing of concrete at least for 14 days and supporting form work shall not be removed till concrete attains at least 75% of the design strength.

Note:3 The sulphate resisting cement conforming to IS:12330 shall be used only in such conditions where the concrete is exposed to the risk of excessive sulphate attack e.g. concrete in contact with soil or ground water containing excessive amount of sulphate. It shall not be used under such conditions where concrete is exposed to risk of excessive chlorides and sulphate attack both.

Note:4 The rate of development of strength is slow in case of blended cement i.e. Portland pozzolana cement and Portland slag cement, as compared to ordinary Portland cement. This aspect should be taken care while planning to use blended cement. Accordingly stage of prestressing, period of removal of form work and period of curing etc. should be suitably increased.

Note: 5 Compatibility of chemical admixtures and super plasticizers with Portland Pozzolana cement and Portland blast furnace slag cement shall be ensured by trials before use.

Note: 6 Some other properties of concrete such as modulus of elasticity, tensile strength, creep and shrinkage are not likely to be significantly different. For design purposes, it will be sufficiently accurate to take the same value as those used for concrete made with OPC.

4.2 Aggregates–Aggregates shall comply with the requirements of IS: 383. Where required by the engineer, aggregates shall be subjected to the tests specified in IS:383. These tests shall be done in accordance with IS: 2386 (Part I) to IS: 2386 (Part VIII).

4.2.1 Size of Aggregate – The nominal maximum size of the aggregate should be as large as possible within the limits specified but in no case greater than one fourth of the minimum thickness of the member, provided that the concrete can be placed without difficulty so as to surround

all reinforcement and prestressing tendons thoroughly and fill the corners of the form work.

4.2.1.1 For heavily reinforced concrete members as in the case of ribs of main beams, the nominal maximum size of the aggregates should usually be restricted to 5mm less than minimum clear distance between the main bars, cables, strands or sheathings where provided or 5mm less than minimum cover to the reinforcement, whichever is smaller. However, in lightly reinforced concrete members such as solid slabs with widely spaced reinforcement, limitation of the size the aggregate may not be so important and the nominal maximum size may sometimes be as great as or even greater than the minimum cover.

4.2.1.2 For reinforced concrete and prestressed concrete works a nominal maximum size of 20mm is generally considered satisfactory. In special cases larger size aggregate may be specifically permitted by the engineer, but in no case, the nominal maximum size shall be more than 40mm.

4.2.2 In general, marine aggregate shall not be used for reinforced concrete and prestressed concrete bridges. However, in special cases, use of marine aggregates may be permitted by the engineer subject to the following: -

(a) The marine aggregates shall be thoroughly washed.

(b) Generally, the limits for chloride content and sulphate content in aggregates after washing will be as under:

	Fine Aggregate	**Coarse Aggregate**
i) Chloride contents (Cl) max.	0.04% by wt. acid soluble	0.02% by wt. acid soluble
ii) Sulphates (SO_3) max	0.4% by wt. acid soluble	0.4% by wt. acid soluble

(c) After washing and drying, the aggregates should conform to IS: 383. The designer should take into account grading of aggregates after washing.

4.3 Water – Water used for washing of aggregates and for mixing and curing concrete shall be clean and free from injurious amounts of oils, acids, alkalis, salts, sugar, organic materials or other substances that may be deleterious to concrete or steel. As a guide the following concentrations represent the maximum permissible values: -

(a) To neutralize 200ml sample of water, using phenolphthalein as an indicator, it should not require more than 2ml of 0.1 normal NaOH. The details of test shall be as given in IS: 3025.

(b) To neutralize 200ml sample of water, using methyl orange as an indicator, it should not require more than 10ml of 0.1 normal HCl. The details of test shall be as given in IS: 3025.

(c) Permissible limits for solids when tested in accordance with IS: 3025 shall be as given in Table-1.

TABLE 1: PERMISSIBLE LIMIT FOR SOLIDS (Clause 4.3)

	Maximum permissible Limit
Organic	200 mg/l
Inorganic	3000 mg/l
Sulphate (as SO_4)	500mg/l
Chlorides (as Cl)	2000 mg/l for plain concrete works, 1000 mg/l for reinforced concrete works and 500 mg/l for prestressed concrete works.
Suspended matter	2000 mg/l

4.3.1 In case of doubt regarding development of strength, the suitability of water for making concrete shall be ascertained by the compressive strength and initial setting time tests specified in 4.3.1.2 and 4.3.1.3.

4.3.1.1 The sample of water taken for testing shall represent the water proposed to be used for concreting, due account being paid to seasonal variation. The sample shall not receive any treatment before testing other than that envisaged in the regular supply of water proposed for use in concrete. The sample shall be stored in a clean container previously rinsed out with similar water.

4.3.1.2 Average 28 days compressive strength of at least three 15cm concrete cubes prepared with water proposed to be used shall not be less than 90 percent of the average of strength of three similar concrete cubes prepared with distilled water. The cubes shall be prepared, cured and tested in accordance with the requirements of IS:516.

4.3.1.3 The initial setting time of test block made with the appropriate cement and the water proposed to be used shall not be less than 30 minutes and shall not differ by

± 30 minutes from the initial setting time of control test block prepared and tested in accordance with the requirements of IS:4031.

4.3.2 The pH value of water shall generally be not less than 6.

4.3.3 Water found satisfactory for mixing is also suitable for curing concrete. However, water used for curing should not produce any objectionable stain or unsightly deposit on the concrete surface. The presence of tannic acid or iron compounds is objectionable.

4.4 Admixtures – The Chief Engineer may permit the use of admixtures for imparting special characteristics to the concrete or mortar on satisfactory evidence that the use of such admixtures does not adversely affect the properties of concrete or mortar particularly with respect to strength, volume change, durability and has no deleterious effect on reinforcement.

4.4.1 The admixtures, when permitted, shall conform to IS:9103.

4.4.2 Calcium chloride or admixtures containing calcium chloride shall not be used in structural concrete containing reinforcement, prestressing tendons or other embedded metal.

4.4.3 The admixture containing Cl & SO_3 ions shall not be used. Admixtures containing nitrates shall also not be used. Admixtures based on thiocyanate may promote corrosion and therefore shall be prohibited.

4.5 Reinforcement

4.5.1 The reinforcement shall be any of the following:

(a) Grade-I mild steel and medium tensile steel bars conforming to IS:432 (Part-I).

(b) High strength deformed steel bars conforming to IS:1786.

(c) Thermo-mechanically Treated (TMT) Bars satisfying requirements of IS:1786.

(d) Rolled steel made from structural steel conforming to IS:2062 Gr.A and Gr.B.

4.5.2 Independent test check on quality of steel from each lot shall be conducted. All reinforcement shall be free form loose small scales, rust and coats of paints, oil, mud etc.

4.5.3 The modulus of elasticity of steel shall be taken as 200kN/mm^2.

4.6 Prestressing Steel

4.6.1 The prestressing steel shall be any of the following :-

(a) Plain hard-drawn steel wire conforming to IS:1785 (part-I).

(b) Uncoated stress-relieved strand conforming to IS:6006.

(c) High tensile steel bars conforming to IS:2090.

(d) Uncoated stress relieved low relaxation strands conforming to IS:14268.

4.6.1.1 All prestressing steel shall be free from splits, harmful scratches, surface flaws, rough, jagged and imperfect edges and other defects likely to impair its use in prestressed concrete.

4.6.2 Modulus of Elasticity – The value of the modulus of elasticity of steel used for the design of prestressed concrete members shall preferably be determined by tests on samples of steel to be used for the construction. For the purposes of this clause, a value given by the manufacturer of the prestressing steel shall be considered as fulfilling the necessary requirements.

4.6.2.1 Where it is not possible to ascertain the modulus of elasticity by test or from the manufacturer of the steel, the following values may be adopted :

Type of Steel	Modulus of Elasticity E_s kN/mm^2
Plain cold-drawn wires Conforming to IS:1785 (Part-I)	210
High tensile alloy steel bars Conforming to IS: 2090	200
Strands conforming to IS: 6006	195
Strands conforming to IS: 14268	195

4.6.3 Coupling units and other similar fixtures used in conjunction with the wires or bars shall have an ultimate

tensile strength of not less than the individual strength of the wires or bars being joined.

4.7 Handling & Storage of Materials – Storage of materials shall be as per IS: 4082.

4.7.1 Cement – Cement of different specifications shall be stacked separately and quality of stored cement actually used in any member or part of the structure shall fulfill the design and construction requirement of the same. Cement shall be stored at the work site in such a manner as to prevent deterioration either through moisture or intrusion of foreign matter. Cement older than 3 months should normally not be used for PSC works unless the quality is confirmed by tests.

4.7.2 Aggregates – Coarse aggregates supplied in different sizes shall be stacked in separate stockpiles and shall be mixed only after the quantity required for each size has been separately weighed or measured. The quantity of coarse aggregates, thus recombined shall be that required for a single batch of concrete.

4.7.3 Steel – The storage of all reinforcing steel shall be done in such a manner as will ensure that no deterioration in its quality takes place. The coil of HTS wires & strands shall be given anti-corrosive treatment such as water soluble oil coating before wrapping it in hession cloth or other suitable packing. During transportation, it shall be ensured that no damage is done to coils while loading and unloading. Care shall be taken to avoid mechanically damaging, work hardening or heating prestressing tendons while handling.

4.7.4 Any material, which has deteriorated or has been damaged, corroded or contaminated, shall not be used for concrete work.

5. CONCRETE

5.1 Grades – Concrete shall be in grades as designated as per **Table-2**.

5.1.1 The characteristic strength is defined as the strength of material below which not more than 5 percent of the test results are expected to fall.

TABLE : 2 GRADES OF CONCRETE (Clause 5.1)

GRADE DESIGNATION	SPECIFIED CHARACTRISTIC COMPRESSIVE STRENGTH AT 28 DAYS (N/mm^2)
M10	10
M15	15
M20	20
M25	25
M30	30
M35	35
M40	40
M45	45
M50	50
M55	55
M60	60

NOTE – In the designation of concrete mix, the letter M refers to the mix and the number to the specified characteristic compressive strength of 150mm cube at 28 days, expressed in N/mm^2

5.2 Properties of Concrete

5.2.1 Tensile Strength of Concrete – The flexural and split tensile strengths shall be obtained as described in IS: 516 and IS: 5816 respectively. When the designer wishes to have an estimate of the tensile strength from compressive strength, the following expression may be used.

$$f_{cr} = 0.7\sqrt{f_{ck}}$$

where,

f_{cr} is the flexural strength in N/mm^2; and

f_{ck} is the characteristic compressive strength of concrete in N/mm^2.

5.2.2 Elastic Deformation – The modulus of elasticity is primarily influenced by the elastic properties of the aggregate and to a lesser extent by the conditions of curing and age of the concrete, the mix proportions and the type of cement. The modulus of elasticity is normally related to the compressive strength of concrete.

5.2.2.1 In the absence of test data, the modulus of elasticity for structural concrete may be taken as follows :-

GRADE OF CONCRETE (N/mm^2)	MODULUS OF ELASTICITY (kN/mm^2)
M10	18
M15	22
M20	25
M25	26
M30	28
M40	31
M50	34
M60	36

5.2.3 Shrinkage – The shrinkage of concrete depends upon the constituents of concrete, size of the member and environmental conditions. For a given environment the shrinkage of concrete is most influenced by the total amount of water present in the concrete at the time of mixing and to a lesser extent, by the cement content.

5.2.3.1 In the absence of test data, the approximate value of shrinkage strain for design may be taken as follows: –

Total shrinkage strain in plain concrete, reinforced concrete and pre-tensioned prestressed concrete: 0.0003.

Residual shrinkage strain in post-tensioned prestressed concrete: as per **Table-3.**

TABLE 3 : SHRINKAGE OF POST-TENSIONED PRESTRESSED CONCRETE (clause 5.2.3)

AGE OF CONCRETE AT THE TIME OF STRESSING IN DAYS	STRAIN DUE TO RESIDUAL SHRINKAGE
3	0.00043
7	0.00035
10	0.00030
14	0.00025
21	0.00020
28	0.00019
90	0.00015

NOTE: The above values of strain are for Ordinary Portland cement.

For special cases reference to expert literature may be made for Shrinkage.

5.2.4 Creep of Concrete – Creep of the concrete depends, in addition to the factors in 5.2.3, on the stress in the concrete, age at loading and the duration of loading. As long as the stress in concrete does not exceed one third of cube strength at transfer, creep may be assumed to be proportional to the stress.

5.2.4.1 Creep in concrete shall be taken as 43×10^{-6} per N/mm^2 of stress at the centroid of prestressing steel in case of prestressed concrete structures.

For special cases reference to expert literature may be made for Creep.

5.2.4.2 In the absence of experimental data and detailed information on the effect of the variables, the ultimate creep strain may be estimated from the following values of creep co-efficient that is ultimate creep strain/elastic strain at the age of loading.

Age of loading	Creep coefficient
7 Days	2.2
28 Days	1.6
1 year	1.1

Note : The Ultimate creep strain estimated as above does not include the elastic strain.

5.2.4.3 For the calculation of deformation at some stage before the total creep is reached, it may be assumed about half the total creep takes place in first month after loading and that about three-quarter of the total creep takes place in the first six months after loading.

5.2.5 Thermal Expansion – The coefficient of thermal expansion depends on nature of cement, the aggregate, the cement content, the relative humidity and the size of sections. The value of coefficient of thermal expansion for concrete with different aggregates may be taken as below :-

Type of Aggregate	Coefficient of Thermal Expansion for Concrete/^{0}C
Quartzite	1.2 to 1.3 x 10^{-5}
Sandstone	0.9 to 1.2x 10^{-5}
Granite	0.7 to 0.95x10^{-5}
Basalt	0.8 to 0.95x 10^{-5}
Limestone	0.6 to 0.9 x 10^{-5}

5.2.6 Modular Ratio – In elastic analysis, modular ratio shall be taken as under:

For tensile reinforcement, $m_1 = 280/f_{ck}$

For compression reinforcement, $m_2 = 420/f_{ck}$

Note: *The above expression for m_1 and m_2 partially takes into account long term effects such as creep. Therefore, this is not the same as the modular ratio derived based on the value of E_c given in 5.2.2.1.*

5.3 Workability of Concrete

5.3.1 The concrete mix proportions chosen should be such that the concrete is of adequate workability for the placing conditions of the concrete and can properly be compacted with the means available.

Placing Conditions (1)	Degree of workability (2)	Values of workability (3)
Concreting of shallow sections with vibration	Very low	20-10 seconds, vee-bee time or 0.75-0.80, compacting factor
Concreting of lightly reinforced sections with vibration	Low	10-5 seconds, vee-bee time or 0.80-0.85, compacting factor
Concreting of lightly reinforced sections without vibrations, or heavily reinforced section with vibration	Medium	5-2 seconds, vee-bee time or 0.85-0.92, compacting factor or 25-75mm, slump for 20mm† aggregate
Concreting of heavily reinforced sections without vibration	High	Above 0.92, compacting factor or 75-125mm, slump for 20mm† aggregate

†For smaller aggregates the values will be lower.

Note:- Suitable plasticizer/admixture may be used to achieve workability of the order of 150-200mm. Plasticizer/ Admixture should confirm to clause 4.4.

5.4 Durability

5.4.1 The durability of concrete depends on its resistance to deterioration and the environment in which it is placed. The resistance of concrete to weathering, chemical attack, abrasion, frost and fire depends largely upon its quality and constituents materials. Susceptibility to corrosion of the steel is governed by the cover provided and the permeability of concrete. The cube crushing strength alone is not a reliable guide to the quality and durability of concrete; it must also have adequate cement content and a low water-cement ratio. The general environment to which the concrete will be exposed during its working life is classified in three levels of severity that is, moderate, severe and extreme, as described below:

ENVIRO -NMENT	EXPOSURE CONDITION
Moderate	Concrete surface protected against weather or aggressive conditions. Concrete surface sheltered from severe rain or freezing whilst wet. Concrete exposed to condensation, concrete structure continuously under water. Concrete in contact with non-aggressive soil/ground water.
Severe	Concrete surface exposed to severe rain, alternate wetting and drying or occasional freezing or severe condensation. Concrete exposed to aggressive sub-soil/ ground water or coastal environment.
Extreme	Concrete surface exposed to sea water spray, corrosive fumes or severe freezing conditions whilst wet. Concrete structure surfaces exposed to abrasive action, surfaces of members in tidal zone. All other exposure conditions which are adverse to exposure conditions covered above.

5.4.2 Permeability:

5.4.2.1 One of the main characteristics influencing the durability of any concrete is its permeability. Therefore, tests for permeability shall be carried out for concrete bridges as recommended in clause 5.4.2.2. With Strong,

dense aggregates, a suitably low permeability is achieved by having a sufficiently low water-cement ratio,by ensuring as thorough compaction of the concrete as possible and by ensuring sufficient hydration of cement through proper curing methods. Therefore, for given aggregates, the cement content should be sufficient to provide adequate workability with a low water-cement ratio so that concrete can be completely compacted by vibration. Test procedure for penetration measuring permeability has been given in Appendix-G. The depth of penetration of moisture shall not exceed 25mm.

5.4.2.2 Permeability test :

(i) Permeability test shall be mandatory for all RCC/ PSC bridges under severe and extreme environment;

(ii) Under moderate environment, permeability test shall be mandatory for all major bridges and for other bridges permeability test is desirable to the extent possible;

(iii) Permeability test is required for RCC/PSC structural element only.

5.4.3 Maximum Water Cement Ratio – The limits for maximum water cement ratio for design mix shall be based on environmental conditions as defined in Clause 5.4.1. The limits for maximum water-cement ratio for different environmental conditions shall be as given in **Table-4(a).**

TABLE 4 (a) : MAXIMUM WATER CEMENT RATIO

(Clause 5.4.3)

Environ-ment	Maximum Water-Cement Ratio		
	Plain concrete (PCC)	Reinforced concrete (RCC)	Prestressed concrete (PSC)
Moderate	0.50	0.45	0.40
Severe	0.45	0.40	0.40
Extreme	0.40	0.35	0.35

5.4.4 Minimum Grade of Concrete – From durability consideration, depending upon the environment to which the structure is likely to be exposed during its service life, minimum grade of concrete shall be as given in **Table 4(b).**

TABLE 4(b) : MINIMUM GRADE OF CONCRETE
(Clause 5.4.4)

A) For Bridges in Pre-stressed Concrete and Important Bridges:

Structural Member	Moderate exposure	Severe exposure	Extreme Exposure
PCC Member	M-25	M-30	M-35
RCC Member	M-30	M-35	M-40
PSC Member	M-35	M-40	M-45

B) For Bridges other than mentioned above and sub-structure:

Structural Member	Moderate exposure	Severe exposure	Extreme Exposure
PCC Member	M-15	M-20	M-25
RCC Member	M-20	M-25	M-30

5.4.5 Cementitious Material Content :

Depending upon the environment to which the structure is likely to be exposed during its service life, minimum cementitious material content in concrete shall be as given in **Table 4(C).** Maximum cementitious material content shall be limited to 500kg/m^3.

TABLE 4(c) : MIN. CEMENTITIOUS MATERIAL CONTENT

(Clause 5.4.5)

Exposure conditions	Minimum Cementitious material content in Kg/m^3		
	PCC	RCC	PSC
Moderate	240	300	400
Severe	250	350	430
Extreme	300	400	440

5.4.6 Total Chloride Contents: -

The total chloride content by weight of cement shall not exceed the following values: -

(a) For prestressed concrete works –

(i) Under extreme environment 0.06%

(ii) Under severe and moderate environment 0.10%

(b) For RCC works 0.15%

5.5 Concrete Mix Proportioning

5.5.1 Mix Proportion – The mix proportions shall be selected to ensure that the workability of the fresh concrete is suitable for the conditions of handling and placing, so that after compaction its surrounds all reinforcements are completely fills the formwork. When concrete gets hardened, it shall have the required strength, durability and surface finish.

5.5.1.1 The determination of the proportions of cement, aggregates and water to attain the required strengths shall be made as follows:

(a) By designing the concrete mix; such concrete shall be called 'Design mix Concrete; or

(b) By adopting nominal concrete mix; such concrete shall be called 'Nominal mix concrete'.

Design mix concrete is preferred to nominal mix. Nominal mixes, when used, are likely to involve higher cement content. Concretes of grades richer than M 20 shall only be design mix concretes.

5.5.1.2 Information Required – In specifying a particular grade of concrete, the following information shall be included: -

(a) Type of mix, i.e. design mix concrete or nominal mix concrete;

(b) Grade designation;

(c) Type of cement;

(d) Maximum nominal size of aggregate;

(e) Workability;

(f) Mix proportion (for nominal mix concrete);

(g) Type of aggregate;

(h) Whether an admixture shall or shall not be used and the type of admixture and the conditions of use; and

(i) Exposure condition.

5.5.2 Design Mix Concrete

5.5.2.1 The mix shall be designed to produce the grade of concrete having the required workability, durability and a characteristic strength not less than appropriate values given in **Table 2**. The procedure given in IS:10262 may be followed for mix design.

5.5.3 Nominal Mix Concrete – Nominal mix concrete may be used for concrete of grade M20. The proportions of materials for nominal mix concrete shall be in accordance with Table 5.

TABLE 5. PROPORTIONS FOR NOMINAL MIX CONCRETE

(Clause 5.5.3)

Grade of conc.	Total quantity of dry aggregates by mass per 50 kg of cement, to be taken as the sum of the individual masses of fine & coarse aggregates (kg)	Proportion of fine aggregate to coarse aggregates (By Mass)				Qty of water per 50 kg of cement Max. (liters)
(1)	(2)	(3)				(4)
		Fine aggregates grading				
		Zone I	Zone II	Zone III	Zone IV	
M20	250	1:1.5	1:2	1:2.25	1:2.5	25

Note: It is recommended that fine aggregate conforming to grading zone IV should not be used in reinforced concrete unless tests have been made to ascertain the suitability of proposed mixed proportions.

5.5.3.1 The cement content of the mix specified in Table 5 for any nominal mix shall be proportionately increased if the quantity of water in a mix has to be increased to overcome the difficulties of placement and compaction, so that water-cement ratio as specified is not exceeded.

Note1: In case of vibrated concrete the limit specified may be suitably reduced to avoid segregation.

Note2: The quantity of water used in the concrete mix for reinforced concrete work should be sufficient, but not more than sufficient to produce a dense concrete of adequate workability for its purpose, which will surround and properly grip all the reinforcement. Workability of the concrete should be controlled by maintaining a water content that is found to give a concrete, which is just sufficiently wet to be placed and compacted without difficulty by means available.

5.5.3.2 If nominal mix concrete made in accordance with the proportions given for a particular grade does not yield the specified strength, such concrete shall be specified as belonging to the appropriate lower grade. Nominal mix concrete proportioned for a given grade in accordance with Table 5 shall not, however be placed in higher grade on the ground that the test strengths are higher than the minimum specified.

5.6 Production and Control of Concrete

5.6.1 General – To avoid confusion and error in batching, consideration should be given to using the smallest practical number of different concrete mixes on any site or in any one plant.

5.6.1.1 A competent person shall supervise all stages of production of concrete. Competent person is one who has been issued competency certificate by Divisional Engineer/Senior Engineer for executing and supervising relevant aspect of concreting. Preparation of test specimens and site tests shall be properly supervised.

5.6.1.2 The engineer shall be afforded all reasonable opportunity and facility to inspect the materials and the manufacture of concrete and to take any samples or to make any tests.

5.6.2 Batching – In proportioning concrete, the quantity of both cement and aggregate should be determined by mass. Water should be either measured by volume in calibrated tanks or weighed. Any solid admixture that may be added, may be measured by mass; liquid and paste admixtures by volume or mass. Batching plant where used should conform to IS: 4925. All measuring equipment should be maintained in a clean serviceable condition, and their accuracy periodically checked, Coarse and fine aggregates shall be batched separately.

5.6.2.1 Except where it can be shown to the satisfaction of the engineer that supply of properly graded aggregate of uniform quality can be maintained over the period of work, the grading of aggregate should be controlled by obtaining the coarse aggregate in different sizes and blending them in the right proportions when required, the different sizes being stocked in separate stock piles. The material should be stock-piled for several hours preferably a day before use. The grading of coarse and fine aggregate should be checked as frequently as possible, the frequency for a given job being determined

by the engineer to ensure that the specified grading is maintained. The grading of fine and coarse aggregate shall be as per IS:383. The combined aggregate shall also conform to all in-aggregate grading curve as per IS:383.

5.6.2.2 In case uniformity in the materials used for concrete making has been established over a period of time, the proportioning may be done by volume batching for M20 grade concrete with the approval of the engineer, provided the materials and aggregates conform to the grading as per IS:383. Where weigh- batching is not practicable, the quantities of fine and coarse aggregate (not cement) may be determined by volume batching for concrete of grade upto M25. If the fine aggregate is moist and volume batching is adopted, allowance shall be made for bulking in accordance with IS:2386 (part III).

5.6.2.3 It is important to maintain the water-cement ratio constant at its correct value. To this end, determination of moisture contents in both fine and coarse aggregates shall be made as frequently as possible, the frequency for a given job being determined by the engineer according to weather condition. The amount of the added water shall be adjusted to compensate for any observed variations in the moisture contents. For the determination of moisture content in the aggregates, IS:2386 (Part-III) may be referred to. To allow for the variation in mass of aggregate due to variation in their moisture content, suitable adjustments in the masses of aggregate shall also be made. In the absence of exact data, only in the case of nominal mixes, the amount of surface water may be estimated from the values given in **Table-6**.

Table-6 SURFACE WATER CARRIED BY AGGREGATE

(Clause 5.6.2.3)

AGGREGATE	APPROXIMATE QUANTITY OF SURFACE WATER	
	PERCENT BY MASS	l/m^3
(1)	(2)	(3)
Very wet sand	7.5	120
Moderately wet sand	5.0	80
Moist sand	2.5	40
*Moist coarse aggregate	1.25-2.5	20-40

* Coarser the aggregate, less the water it will carry.

5.6.2.4 No substitutions in materials used on the work or alterations in the established proportions, except as permitted in 5.6.2.2 and 5.6.2.3 shall be made without additional tests to show that the quality and strength of concrete are satisfactory.

5.6.3 Mixing - Concrete shall be mixed in a mechanical mixer. The mixer should comply with IS:1791. The mixing shall be continued until there is a uniform distribution of the materials in the mass is uniform in colour and consistency. If, there is segregation after unloading from the mixer, the concrete should be remixed.

Note 1: For guidance, the mixing time may be taken as 1.5 to 2 minutes for normal mixer and 45 to 60 seconds for high rated batching plant.

5.6.3.1 Workability of the concrete –Should be controlled by direct-measurement of water content with/without admixtures. Workability should be checked at frequent intervals (refer to IS:1199).

5.7 Ready Mixed Concrete

5.7.1 Use of Ready Mixed Concrete –Ready mixed concrete may be used, wherever required. It shall conform to the specifications of concrete, as laid down in this Code. For other aspects, which are not covered in this Code, IS:4926 (Specifications for Ready Mixed Concrete) may be referred.

5.7.2. Effect of transit (transportation) time on Ready Mixed Concrete: As ready mixed concrete is available for placement after lapse of transit time, reduction in workability occurs, which may lead to difficulty in placement of concrete. In addition, in case of longer transit time, initial setting of concrete may also takes place, which may render it unusable. Thus, while planning for using of Ready Mixed Concrete, these aspects should be kept in view.

5.7.3 Checking suitability of Admixtures:- Generally admixtures, like water reducing agent, retarder etc. are used in Ready Mixed Concrete for retention of desired workability and to avoid setting of concrete. In such cases, admixtures should be tested for their suitability as per IS:9103 at the time of finalizing mix design. Regarding specification of admixtures, clause 4.4 of this Code may be referred.

5.7.4 Re-tempering with Concrete – Under any circumstances, retempering i.e. addition of water after initial mixing, shall not be allowed, as it may affect the strength and other properties of concrete.

5.7.5 Time Period for delivery of concrete: The concrete shall be delivered completely to the site of work within 1½

hours (when the atmospheric temperature is above 20^{0}C) and within 2 hours (when the atmospheric temperature is at or below 20^{0}C) of adding the mixing water to the dry mix of cement and aggregate or adding the cement to the aggregate, whichever is earlier. In case, location of site of construction is such that this time period is considered inadequate, increased time period may be specified provided that properties of concrete have been tested after lapse of the proposed delivery period at the time of finalising mix design.

5.7.6 Transportation of Ready Mixed Concrete: The Ready Mixed Concrete shall be transported in concrete transit agitators conforming to IS: 5892 (Specification for concrete transit mixers and agitators). Agitating speed of the agitators during transit shall not be less than 2 revolutions per minute not more than 6 revolution per minute.

6 FALSE WORK & FORM WORK

6.1 Falsework

6.1.1 General

6.1.1.1 Falsework shall be designed to meet the requirements of the permanent structure, taking into account the actual conditions of materials, environment and site conditions.

6.1.1.2 Careful attention shall be paid to the detailing of connections and function with a view to avoiding gross errors leading to significant damage or failure.

6.1.2 Loads:

6.1.2.1 Falsework shall be designed to cater for following loads:

(a) Dead load of wet concrete and reinforcement;

(b) Weight of form work;

(c) Plant and equipment including impact;

(d) Impact due to deposition of concrete;

(e) Construction personnel;

(f) Prestressing loads;

(g) Lateral loads;

(h) Wind loads;

(i) Force due to water current, if any.

6.1.3 Materials –All the materials shall conform to the specified quality consistent with the intended purpose and actual site condition as applicable.

6.1.4 Falsework Plans – Falsework plans shall include the following information:

(a) **Design Assumptions –** All major design values and loading conditions shall be shown on these drawings. They include assumed values of superimposed load, rate of placement, mass of moving equipment which may be operated on formwork, foundation pressures, camber diagram and other pertinent information, if applicable.

(b) Types of materials, sizes, lengths and connection details.

(c) Sequence of removal of forms and shores.

(d) Anchors, form ties, shores and braces.

(e) Field adjustment of the form during placing of concrete.

(f) Working scaffolds and gangways.

(g) Weep holes, vibrator holes or access doors for inspection and placing of concrete.

(h) Construction joints, expansion joints.

(i) Sequence of concrete placements and minimum/ maximum elapsed time between adjacent placements.

(j) Chamfer strips or grade strips for exposed corners and construction joints.

(k) Foundation details for falsework.

(l) Special provisions such as protection from water, ice and debris at stream crossings.

(m) Form coatings and release agents.

(n) Means of obtaining specified concrete.

(o) Location of box outs, pipes, ducts, conduits and miscellaneous inserts in the concrete attached to or penetrating the forms.

(p) Location and spacing of rubber pads where shutter vibrators are used.

6.2 Formwork

6.2.1 General – The formwork shall conform to the shapes, lines and dimensions shown on the drawings such that the relevant tolerances of finished concrete as specified in 6.5 are achieved.

6.2.2 Formwork shall be so constructed and supported as to remain sufficiently rigid during the placement and compaction of the concrete and shall be sufficiently water-tight to prevent loss of water or mortar from concrete. The formwork and false work must be designed keeping in view all loads and forces.

6.2.3 Forms for finished surfaces should be smooth and mortar tight. If wood forms are used, the boards must be uniform in the thickness, tongued and grooved, smoothly finished on the surface next to the concrete, evenly matched and tightly placed, except where the desired surface or appearance requires special treatment. The use of forms of plywood/steel/similar product is also permitted.

6.2.4 Finishing: No surface finishing will normally be provided. If minor defects are noticed, the surface should be rendered. The required finish shall be obtained by use of properly designed formwork of closely jointed boards. The surface may be improved by carefully removing all fins and other projections, thoroughly washing down and then filling the most noticeable surface blemished with a cement and fine aggregate paste. For major defects, if noticed any repairs should be carried out with prior approval of the engineer.

6.2.5 Moulds for pretension works shall be sufficiently strong and rigid to withstand, without distortion, the effects of placing and compacting concrete as well as those prestressing in case of manufacture by the individual mould process where the prestressing tendon is supported by the mould before transfer**.**

6.3 Cleaning and Treatment of Forms- All rubbish particularly chippings, shavings and sawdust shall be removed from the interior of the forms before the concrete is placed and the formwork in contact with the concrete shall be cleaned and thoroughly wetted or treated with an approved release agent. Care shall be taken that such approved release agent is kept out of contact with the reinforcement.

6.4 Stripping Time - Forms shall not be struck until the concrete has reached a strength at least twice the stress to which the concrete may be subjected at the time of removal of formwork. The strength referred to shall be that of concrete using the same cement and aggregates, with the same propositions and cured under conditions of temperature and moisture similar to those existing on the work. Where possible, the formwork shall be left longer as it would assist the curing.

6.4.1 In normal circumstances and where ordinary Portland cement is used, forms may generally be removed after the expiry of the following periods:

(a)	Walls, columns & vertical faces of all structural members.	24 to 48 hrs. as may be decided by the Engineer.
(b)	Slabs (props left under)	3 days
(c)	Beam soffits (props left under)	7 days
(d)	Removal of props under slabs:	
	(i) Spanning up to 4.5m	7 days
	(ii) Spanning over 4.5m	14 days
(e)	Removal of props under beams:	
	(i) Spanning upto 6 m.	14 days
	(ii) Spanning over 6m	21 days

For other cements, the stripping time recommended for ordinary Portland cement may be suitably modified.

6.4.1.1 The number of props left under, their sizes and disposition shall be such as to be able to safely carry the full dead load of the slab or beam as the case may be together with any live load likely to occur during curing or further construction.

6.4.2 Where the shape of the element is such that the formwork has reentrants angles, the formwork shall be removed as soon as possible after the concrete has set, to avoid shrinkage cracking occuring due to the restraint imposed.

6.4.3 The forms should be so constructed as to be removable in the sections without marring or damaging the surface of the concrete. Forms should be removed as soon as possible in order to make necessary repairs and finish the surface. As soon as forms are removed, list of major/minor defects noticed in concrete should be prepared. Repairing methodology should be approved by Engineer Incharge. After making necessary repairs, the surface should be finished with wood float so as to free from streaks, discolourations or other imperfections. Plastering should

not be permitted and a steel trowel should not be used to finish surfaces.

6.5 The Tolerances for Finished Concrete Bridge Structures:-

1.	Shift from alignment	± 25mm
2.	Deviation from plumb or specified, batter for face of exposed piers.	1 in 250, subjected to a maximum value of 0.05 times the least lateral dimension of pier.
3.	Deviation from plumb or specified, batter for face of backfilled abutments	1 in 125
4.	Cross-sectional dimensions of piers, abutments and girders	-5 mm +20mm
5.	Thickness of deck slab of bridges	+6mm -3mm
6.	Size and locations of openings	±12mm
7.	Plan dimensions of footings (formed)	+50mm -25mm
8.	Plan dimensions of footings (Unformed excavations)	+75mm -00mm
9.	Thickness of footings	+No limit - 5%
10	Footing eccentricity	0.02 times the width of the footing in the direction of deviation but not more than 50mm.
11	Reduced level of top of footing/pier/bed block	±5mm
12	Centre to centre distance of pier and abutments at pier top	±30mm
13	Centre to centre distance of bearings along span	±5mm
14	Centre to centre distance of bearings across span	±5mm

7 REINFORCEMENT AND PRESTRESSING TENDONS

7.1 Ordinary Reinforcement- Any reinforcement which is bent, should not be rebent at the location of the original bend. Where the temperature of steel is below 5^0C, special precautions may be necessary such as reducing the speed of bending or with the engineer's approval, increasing the radius of bending.

7.1.1 Straightening, Cutting & Bending– Reinforcement shall be bent and fixed in accordance with the procedure specified in IS: 2502 and shall not be straightened in a manner that will injure the material. All reinforcement shall be bent cold.

7.1.2 Special precautions like coating of reinforcement bars shall be taken for reinforced concrete elements exposed to severe and extreme exposure conditions.

7.1.3 Placing – All reinforcement shall be placed and maintained in the position shown in the drawings.

7.1.3.1 Crossing bars should not be tack-welded for assembly of reinforcement unless permitted by the engineer. At all intersections, reinforcing bars shall be securely bound together with 1.6mm dia mild steel wire in accordance with IS:280 or with approved reinforcement clips. The free ends of the binding wire shall be bent inwards. For aggressive environment, galvanized binding wire shall be used.

7.1.3.2 All steel fabrics shall be lapped two meshes unless otherwise shown on the drawing and securely bound to the supporting bars with 1.6mm dia mild steel wire (IS:280) or approved reinforcement clips. The free ends of the binding wire shall be bent inwards. Proper cutting pliers shall be used and the wire binding and tying shall be done as tightly as possible.

7.1.3.3 Tolerance on placing of Reinforcement– Unless otherwise specified by the engineer, reinforcement shall be placed within the following tolerances:

(a) For over all depth 200 mm or less : ± 10mm

(b) For over all depth more than 200mm : ± 15mm

The cover shall, in no case, be reduced by more than one-third of specified cover or 5mm whichever is less.

7.1.3.4 Sufficient spacers shall be provided as shall in the opinion of the engineer be necessary to maintain specified concrete cover to the reinforcement and preventing displacement before and during the placement of the concrete. Spacers should be of such material and designs as will be durable, will not lead to the corrosion of reinforcement and will not cause spalling of the concrete cover. Spacer block made from cement, sand and small aggregates should match the mix proportion of the concrete as far as is practicable with a view to being comparable in strength, durability and appearance. The use of the pieces

of wood, tile or porous material will not be allowed for this purpose.

7.1.4 Welded Joints or Mechanical Connections – Welded joints or mechanical connections in reinforcement may be used with the approval of the engineer but in the case of important connections, test shall be made to prove that the joints are of the full strength of bars connected.

7.1.4.1 Welding of mild steel bars conforming to IS:432(Part I) may be permitted with the approval of the engineer. Welding of mild steel reinforcement shall be done in accordance with the recommendations of IS:2751. All welders and welding operators to be employed shall have to be qualified by tests prescribed in IS: 2751. Inspection of welds shall conform to IS:822 and destructive and non-destructive testing may be undertaken when deemed necessary. Joints with weld defects detected by visual inspection or dimensional inspection shall not be accepted.

7.1.4.2 Welded joints may be permitted in cold- worked bars conforming to IS:1786 provided that the carbon equivalent calculated from the chemical composition of the bar is 0.4% or less. Welding of the cold-worked bars may be done in accordance with the recommendations of IS:9417. When cold-worked bars are welded, the stress at the weld should be limited to the strength of mild steel bars without cold-working.

7.1.4.3 Butt welding between the ends of a bar in line, whereby the stress is transferred across the section, is to be allowed for mild steel bars only.

7.1.4.4 Welded joints should not be located near the bends in the reinforcement. Wherever possible, joints in the parallel bars of principal tensile reinforcement should be staggered. The welded joints may preferably, be placed in regions of low stresses.

7.1.4.5 Bars may be joined with mechanical devices e.g. by special grade steel swaged on to bars in end to end contact or by screwed couplers or using bottlenuts, if permitted by the engineer. Patented systems with approved use shall only be permitted to be used on production of test results showing the adequacy of the device to the satisfaction of the Engineer-In -charge. The effectiveness for such joints shall invariably be proved by static and fatigue strength tests. Such joints should preferably be located at sections where the bending moment is not more than 50 percent of the moment of resistance and such joints should be so disposed that at any section not more than 50% of the bars are connected by mechanical devices, bottlenuts or couplings (see 15.9.6.5).

7.1.4.6 Reinforcement temporarily left projecting from the concrete at construction joints or other joints shall not be bent during the period in which concreting is suspended except with the approval of the engineer. Where reinforcement bars are bent aside at construction joints and afterwards bent back to the original positions, care should be taken to ensure that at no time is the radius of the bend less than 4 bar diameters for plain mild steel or 6 bar diameters for the deformed bars. Care shall also be taken when bending back bars to ensure that the concrete around the bar is not damaged.

7.1.4.7 No concreting shall be done until the reinforcement has been inspected and approved by the Engineer.

7.1.5 Protective Coatings – In order to offer adequate resistance against corrosion, reinforcement bars may be provided with suitable protective coatings depending upon the environmental conditions.In aggressive environments (severe and extreme) application of cement slurry coating after removal of rust and other loose material from the surface of the reinforcement bar will generally be sufficient. However, specialist literature may be referred to in extreme exposure condition.

7.2 Prestressing Tendons

7.2.1 Straightening

7.2.1.1 The wire and strands as supplied, shall be self-straightening when uncoiled.

7.2.1.2 In the case of high tensile steel bars, any straightening (or bending if the design provides for curved bars) shall be carried out by means of a bar-bending machine. Bars shall not be bent when their temperature is less than 10° C. Bars bent in threaded portion shall be rejected.

7.2.1.3 In no case, heat shall be applied to facilitate straightening or bending of prestressing steel.

7.2.2 Special precautions like coating of prestressing wires/strands/ bars/tendons shall be taken for post-tensioned prestressed concrete elements exposed to severe and extreme exposure conditions.

7.2.3 Cutting

7.2.3.1 All cutting to length and trimming of the ends of wires shall be done by suitable mechanical cutters.

7.2.3.2 Bars shall preferably be ordered to the exact length required. Any trimming required shall be done only after the bar has been tensioned and the grout has set; it shall then be carried out in accordance with 7.2.3.1.

7.2.4 Jointing

7.2.4.1 Strands and hard-drawn wires, used in prestressed concrete work shall be continuous over the entire length of the tendon.

7.2.4.2 High tensile steel bars may be joined together by means of couplings, provided the strength of the coupling is such that in a test to destruction, the bar shall fail before the coupling.

7.2.4.3 Welding shall not be permitted in prestressing steel.

7.2.5 Arrangement of Tendons and Positioning

7.2.5.1 All prestressing steel shall be carefully and accurately located in the exact positions shown in design drawings. The permissible tolerance in the location of the prestressing tendon shall be ± 5mm. Curves or bends in prestressing tendon required by the designer shall be gradual and the prestressing tendon shall not be forced around sharp bends or be formed in any manner which is likely to set up undesirable secondary stresses.

7.2.5.2 The relative position of wires in a cable, whether curved or straight, shall be accurately maintained by suitable means such as sufficiently rigid and adequately distributed spacers.

7.2.5.3 In the case of post-tensioned work, the spacing of wires in a cable shall be adequate to ensure the free flow of grout.

7.2.5.4 The method of supporting and fixing the tendons (or the sheaths or duct formers) in position should be such that they will not be displaced by heavy or prolonged vibration, by pressure of the wet concrete, including upwards thrust of concrete, by workmen or by construction traffic.

7.2.5.5 The means of locating prestressing tendons should not unnecessarily increase the friction greater than that assumed in the design, when they are being tensioned.

7.2.6 Tensioning the Tendons

7.2.6.1 General – All wires, strands or bars stressed in one operation shall be taken, where possible, from the same parcel. Each cable shall be tagged with its number from which the coil numbers of the steel used can be identified. Cables shall not be kinked or twisted. Individual wires or strands for which extensions are to be measured shall be readily identifiable at each end of the member. No strand that has become unravelled shall be used. The order in which wires or cables forming a part of prestressing tendon are to stressed should be in such a way that stresses permitted are not exceeded at any stage. The order should be decided by the engineer responsible for the design and should be shown on the working drawings. Similarly, where there are a large number of separate tendons, the order in which the tendons are to be stressed should be decided by the engineer and shown on the working drawings. The tensioning of each tendon should be such as to cause as little eccentric stress as possible and to ensure this, symmetrical tendons should be successively stressed.

7.2.6.2 Tensioning Apparatus

7.2.6.2.1 The requirements of 7.2.6.2 shall apply to both the pre-tensioned and the post-tensioned methods of prestressed concrete except where specifically mentioned otherwise.

7.2.6.2.2 Prestressing steel may be tensioned by means of hydraulic jacks of similar mechanical apparatus. The method of tensioning steel covered by this code is generally by means of hydraulic or similar mechanical jacks.

The type of tensioning apparatus shall be such that a controlled force can be applied. It shall not induce dangerous secondary stresses or torsional effects on steel, concrete or on the anchorages.

7.2.6.2.3 The means of attachment of the tendon to the jack or tensioning device shall be safe and secure and such as not to damage the wire or bar.

7.2.6.2.4 The force in the tendons during the tensioning shall be measured by direct-reading load cells or obtained indirectly from gauges fitted in the hydraulic system to determine the pressure in the jacks. Facilities shall be provided for the measurement of the extension of the tendon and of any movement of the tendon in the gripping devices. The load-measuring device shall be calibrated to an accuracy with +2% and checked at intervals to the approval of the engineer. Elongation of the tendon shall be measured to an accuracy within ± 2% or 2mm, whichever is more accurate.

7.2.6.2.5 The tensioning equipment shall be calibrated before the tensioning operation and at intervals to the approval of the engineer.

7.2.6.2.6 Temporary Gripping Device – Prestressing tendons may be gripped by wedges, yokes, double cones or any other approved type of gripping devices. The prestressing wires may be gripped singly or in groups. Gripping devices shall be such that in a tensile test, the wire or wires fixed by them would break before failure of the grip itself.

7.2.6.2.7 Releasing Device - The releasing device shall be so designed that during the period between the tensioning and release, the tension in the prestressing elements is fully maintained by positive means, such as external anchorages. The device shall enable the transfer or prestress to be carried out gradually so as to avoid large difference of tension between wires in a tendon, severe eccentricities of prestress or the sudden application of stress to the concrete.

7.2.6.3 Pretensioning

7.2.6.3.1 Straight Tendons- In the long-line method of pre-tensioning sufficient locator plates shall be distributed throughout the length of the bed to ensure that the wires or strands are maintained in their proper position during concreting. Where a number of units are made in line, they shall be free to slide in the direction of their length and thus permit transfer of the prestressing force to the concrete along the whole line.

In the individual mould system, the moulds shall be sufficiently rigid to provide the reaction to the prestressing force without distortion.

7.2.6.3.2 Deflected Tendons – Where possible the mechanisms for holding down or holding up tendons shall ensure that the part in contact with the tendon is free to move in the line of the tendon so that frictional losses are nullified. If, however, a system is used that develops a frictional force, this force shall be determined by test and due allowance made.

For single tendons, the deflector in contact with the tendon shall have a radius of not less than 5 times the tendon diameter for wire or 10 times the tendon diameter for a strand, and the angle of deflection shall not exceed 15 degrees.

The transfer of the prestressing force to the concrete shall be effected in conjunction with the release of hold-down and hold-up forces as approved by the engineer.

7.2.6.4 Post-tensioning

7.2.6.4.1 Arrangement of Tendons – Where wires, strands or bars in a tendon are not stressed simultaneously, the use of spacers shall be in accordance with the recommendations of the system manufacturer.

7.2.6.4.2 Sheathing - The sheathings shall be in mild steel as per the sub-clause 7.2.6.4.2.3. However, as an alternative, HDPE sheathings as per sub-clause 7.2.6.4.2.4 may be used subject to its being cost effective as compared to metal sheathing. The sheaths shall be in as long lengths as practical so as not to be dented or deformed during handling and transporting. These shall conform to the requirements as per tests specified in Appendix-B and B1 and the manufacturer shall furnish a test certificate to this effect. The tests specified in Appendix B1 are to be performed as part of additional acceptance tests for prestressing system employing corrugated HDPE sheathing ducts and are not meant for routine site testing purpose.

7.2.6.4.2.1 The sheaths shall be sufficiently watertight to prevent concrete laitance penetrating in them in quantities likely to increase friction. Special care shall be taken to ensure water-tightness at the joints.

7.2.6.4.2.2 The alignment of all sheaths and extractable cores shall be correct to the requirements of the drawings and maintained securely to prevent displacement during placement and compaction of concrete. The permissible

tolerance in the location of the sheaths and extractable cores shall be 5 mm. Any distortion of the sheath during concreting may lead to additional friction.

7.2.6.4.2.3 Mild Steel Sheathing

7.2.6.4.2.3.1 Unless otherwise specified, the material shall be Cold Rolled Cold Annealed (CRCA) mild steel intended for mechanical treatment and surface refining but not for quench hardening or tempering. The material shall be clean and free from rust and normally of bright metal finish. However, in case of use in aggressive environment (severe and extreme as defined in clause 5.4.1), galvanized or lead coated mild steel strips may be used.

7.2.6.4.2.3.2 The thickness of the strips shall be a minimum of 0.24 mm ± 0.02 mm for internal diameter of sheathing ducts upto and including 51mm and shall be 0.30 mm±0.02 mm for diameter beyond 51mm and upto 91 mm.

7.2.6.4.2.3.3 The joints of all sheathing shall conform to the provisions contained in Appendix "C".

7.2.6.4.2.4 Corrugated HDPE sheathing

7.2.6.4.2.4.1 Unless otherwise specified, the material for the high-density polyethylene (HDPE) sheathing shall have the following properties:

7.2.6.4.2.4.2 The thickness of the wall shall be 2.3±0.3 mm as manufactured and 1.5mm after loss in the compression test as per clause B1-2 at Appendix B1, for sheathing upto 160 mm Outer Diameter.

7.2.6.4.2.4.3 The sheathing shall be corrugated on both the sides. The sheathings shall transmit full tendon strength from the tendon to the surrounding concrete over a length not greater than 40 times the sheathing diameter.

7.2.6.4.2.4.4 Sheathings shall be joined by adopting any one of the following methods, as convenient to suit the individual requirements of the location, subject to the satisfactory pressure tests, before adoption.

- Screwed together with male and female threads.
- Jointing with thick walled HDPE shrink couplers with glue.
- Welding with electrofusion couplers.

The joints shall be able to withstand an internal pressure of 0.5 bar (0.05Mpa) for 5 minutes as per water loss test procedure given in clause B-7 at Appendix B.

7.2.6.4.3 Anchorages – The anchorage system in general comprises the anchorage itself and the arrangement of tendons and reinforcement designed to act with the anchorage.

7.2.6.4.3.1 The anchorage may consist of any device patented or otherwise, which complies with the requirements laid down in 7.2.6.4.3.2 to 7.2.6.4.3.6. Proprietary anchorages shall be handled and used strictly in accordance with the manufacturer's instructions and recommendations.

Property	Unit	Applicable Standard	Temperature	Acceptance Values Min	Max
Carbon content	%			2	-
Density	gm/cc	IS2530	23 $^{\circ}$ C	0.94	0.96
Tensile strength at Yield	MPa	BS EN ISO 527-3		20	26
Shore 'D' Hardness		BS EN ISO 2039-1		55	65
Elongation at Yield	%	BS EN ISO 527-3		7	10
Melt Flow Index (MFI)	g/10 minutes	IS:2530	190 $^{\circ}$ C under a mass of 5 kg	0.5	1.2
Environmental Stress Crack Resistance	Hrs	ASTMD-1693	70 $^{\circ}$ C	192	
Coefficient of Thermal Expansion for 20 $^{\circ}$C - 80 $^{\circ}$ C	/ $^{\circ}$ C	DIN 53 752		1.50×10^{-4}	
Charpy impact strength of notched specimen (i)at 23 $^{\circ}$ C (ii) at -40 $^{\circ}$ C	kJ/m^2	BS EN ISO 179		$1.0 kJ/m^2$ $4 kJ/m^2$	

7.2.6.4.3.2 The anchoring device shall be capable of holding without more than nominal slip the prestressing tendon subjected to a load midway between the proposed initial prestressing load and the ultimate strength of the prestressing tendon.

7.2.6.4.3.3 The anchoring device shall be strong enough to resist in all respects a force equal to at least the breaking strength of the prestressing tendon it anchors.

7.2.6.4.3.4 The anchorage shall transfer effectively and distribute, as evenly as possible, the entire force from the prestressing tendon to the concrete without inducing undesirable secondary or local stresses.

7.2.6.4.3.5 The anchorage shall be safe and secure against both dynamic and static loads as well as against impact.

7.2.6.4.3.6 The anchorage shall have provision for the introduction of a suitable protective medium, such as cement grout, for the protection of the prestressing steel unless alternate arrangements are made.

7.2.6.4.3.7 Where embedded anchorage are provided, its spacing, reinforcement details, concrete strength, cover and other dimensions shall conform to the manufacturer's specification/ specialized literature.

7.2.6.4.4 Deflected Tendons – The deflector in contact with the tendon shall, where possible, have a radius of not less than 50 times the diameter of the tendon and the total angle of the deflection shall not exceed 15 degree. Where the radius is less than 50 times the diameter of the tendon, and the angle of deflection exceeds 15 degree, the loss of strength of the tendon shall be determined by test and due allowance made.

7.2.6.5 Stressing

7.2.6.5.1 The tensioning of prestressing tendons shall be carried out in manner that will induce a smooth and even rate of increase of stress in the tendons. All wires/strands in a tendon shall be stressed simultaneously.

7.2.6.5.2 The total tension imparted to each tendon shall conform to the requirement of the design. No alteration in the prestressing force in any tendon shall be allowed unless specifically approved by the designer.

7.2.6.5.3 Any slack in the prestressing tendon shall first be taken up by applying in a small initial tension.

The initial tension required to remove slackness shall be taken as the starting point for measuring the elongation and a correction shall be applied to the total required elongation to compensate for the initial tensioning of the wire. The extent of correction shall be arrived at by plotting on a graph the gauge reading as abscissae and extensions as ordinates; the intersection of the curve with the Y axis when extended shall be taken to give the effective elongation during initial tensioning and this effective elongation shall be added to the measured elongation to arrive at the actual total elongation as shown in Fig.1.

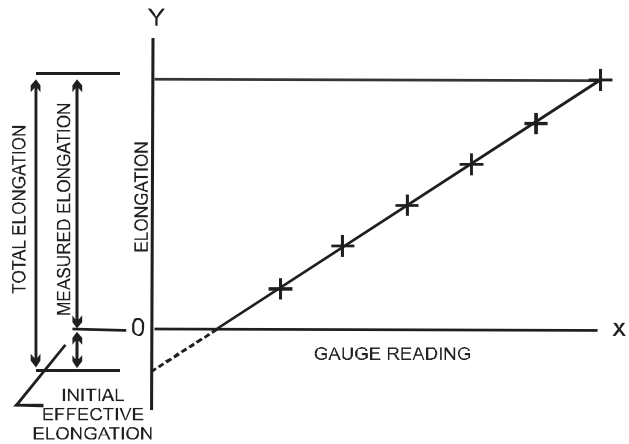

FIGURE 1 : ACTUAL ELONGATION

7.2.6.5.4 When two or more prestressing tendons are to be tensioned simultaneously, care shall be taken to ensure that all such tendons are of the same length from grip to grip. The provision shall be more carefully observed for tendons of length smaller than 7.5 m.

7.2.6.5.5 The placement of cables or ducts and the order of stressing and grouting shall be so arranged that the prestressing steel when tensioned and grouted, does not adversely affect the adjoining ducts.

7.2.6.5.6 Measurements of Prestressing Force

7.2.6.5.6.1 The force induced in the prestressing tendon shall be determined by means of gauges attached to the tensioning apparatus as well as by measuring the extension of the steel and relating it to its stress-strain curve. The variation between the two measurements should be within ± 5%. It is essential that both methods are used jointly so that the inaccuracies to which each is singly susceptible are minimized. Due allowance shall be made for the frictional losses in the tensioning apparatus. If the variation of two measurements exceeds 5% then :

(i) the cause shall be ascertained.

(ii) the cable should be released and re-stressed.

(iii) even then, if the variation does not come within 5% then the cable is to be rejected.

The pressure gauge of devices attached to the tensioning apparatus to measure the force shall be periodically calibrated to ensure that they do not at any time introduce errors in reading exceeding 2 percent.

Note:- If the calculated elongation is reached before the calculated gauge pressure is obtained, continue tensioning till attaining the calculated gauge pressure, provided the elongation does not exceed 1.05 times the calculated elongation. If this elongation is achieved before the calculated gauge pressure is attained, stop stressing and inform the engineer for ascertaining the cause.

If the calculated elongation has not been reached continue tensioning by intervals of 5 kg/cm^2 until the calculated elongation is reached provided the gauge pressure does not exceed 1.05 times the calculated gauge pressure.

If the elongation of 1.05 times the calculated gauge pressure is less than 0.95 times the calculated elongation, the following measures must be taken, in succession, to define the cause of this lack of elongation :

- Recalibrate the pressure gauge.
- Check the correct functioning of the jack, pump and leads.
- De-tension the cable. Slide it in its duct to check that it is not blocked by mortar, which has entered through holes in the sheath. Re-tension the cable, if free.
- Elastic modulus of strand of PSC Steel should be adopted as per the test result of the steel .
- If the required elongation is not obtained, further operations such as cutting or sealing, should not be undertaken without the approval of the engineer.

7.2.6.5.6.2 In measuring the extension of prestressing steel, any slip which may occur in the gripping device shall be taken into consideration.

7.2.6.5.7 Breakage of Wires – The breakage of wires in any one prestressed concrete member shall not exceed 2.5 percent during tensioning. Wire breakage after anchorage, irrespective of percentage, shall not be condoned without special investigation.

7.2.6.5.8 Transfer of prestressing Force

7.2.6.5.8.1 The transfer of the prestress shall be carried out gradually so as to avoid large differences of tension between wires in a tendon, severe eccentricities of prestressing force and the sudden application of stress to the concrete.

7.2.6.5.8.2 Where the total prestressing force in a member is built up by successive transfers to the force of a number of individual tendons on to the concrete, account shall be taken of the effect of the successive prestressing.

7.2.6.5.8.3 In the long line and similar methods of prestressing, when the transfer is made on several moulds at a time, care shall be taken to ensure that the prestressing force is evenly applied on all the moulds and that the transfer of prestress to the concrete is uniform along the entire length of the tension line.

7.2.7 Protection of Prestressing Steel and Anchorages – In all constructions of the post-tensioned type, where prestressing is initially carried out without bond, the prestressing tendon shall, at a subsequent date and generally not later than one week after prestressing, be given adequate protection against corrosion.

7.2.7.1 Internal Prestressing Steel– Internal prestressing steel is best protected by a cement or cement-sand grout preferably in colloidal form. Care shall be taken to prevent segregation and for that purpose, only fine sand shall be used.

7.2.7.2 External Prestressing Steel–The protection of external prestressing steel is usually best done by encasing the tensioned wires, strands or bars in a dense concrete secured to the main concrete, for example, by reinforcement left projecting from the latter. If a cement-sand mix is used, the cover provided and its density should be adequate to prevent corrosion. Alternatively, the steel may be encased in bitumen or where the steel is accessible for inspection and maintenance, paint protection may be provided.

7.2.7.3 The anchorage shall be adequately protected against damage or corrosion soon after the completion of the final stressing and grouting operations.

8 TRANSPORTATION, PLACEMENT, COMPACTION & CURING OF CONCRETE

8.1 Transportation – Mixed concrete shall be transported from the place of mixing to the place of final deposit as rapidly as practicable by methods which will prevent the segregation or loss of the ingredients. Concrete shall be deposited as near as practicable to its final position to avoid rehandling.

8.1.1 When concrete is conveyed by chute, the plant shall be of such size and design as to ensure practically continuous flow in the chute. The slope of the chute shall be such as to allow the concrete to flow without the use of excessive quantity of water and without segregation of the ingredients. The delivery end of the chute shall be as close as possible to the point of deposit. When the operation is intermittent, the spout shall discharge into a hopper. The chute shall be thoroughly flushed with water before and after each working period; the water used for this purpose shall be discharged outside the formwork.

8.1.2 During hot or cold weather, concrete shall be transported in deep containers. Other suitable methods to reduce the loss of water by evaporation in hot weather and heat loss in cold weather may also be adopted.

8.2 Placing – The concrete shall be placed before setting has commenced and shall not be subsequently disturbed. Concrete shall be so placed as to avoid segregation of the materials and displacement of reinforcement. To achieve this, concrete should be lowered vertically in the forms and horizontal movement of concrete inside the forms should as far as practicable be brought to a minimum. In wall forms drop chutes attached to hoppers at the top should preferably be used to lower concrete to the bottom of the form. Under no circumstances concrete shall be dropped freely from a height of more than 1.5 metre.

8.2.1 A record shall be kept of the time and date of placing the concrete in each portion of the structure.

8.2.2 Concrete cover blocks of the same strength and density as parent concrete shall be used.

8.3 Compaction – No concrete shall be allowed without vibration except under water concreting or tremie concreting, or in specific cases with prior approval where access is not available.

Concrete shall be thoroughly compacted and fully worked around the reinforcement, around embedded fixtures and into corners of the formwork. To achieve proper compaction mechanical vibrators shall be used. However, in case of vibrated concrete, quantity of water in a nominal mix concrete may have to be reduced as brought out in Note 1 under 5.5.3.1. The vibrator can be internal or external type and depending on the shape and size of the member both the types may be used in combination. When internal vibrators are used they shall be used vertically to the full depth of the layer being placed and shall penetrate into the layer below while it is still plastic to the extent of 100mm. The vibrator shall be kept in place until air bubbles cease to escape from the surface and then withdrawn slowly to ensure that no hole is left in the concrete, care being taken to see that it remains in continued operation while being withdrawn. Vibrator should not be used to move the concrete as it can cause honey-combing.

8.3.1 The internal vibrators shall be inserted in an orderly manner and the distance between insertions should be about 1.5 times the radius of the area visibly affected by vibration.

8.3.2 Form vibrators shall be used in addition to internal vibrators in case of prestressed concrete girders/slabs etc. Whenever vibration has to be applied externally, the design of formwork and the disposition of vibrators should receive special consideration to ensure efficient compaction and to avoid surface blemishes.

8.3.3 The use of vibrators complying with IS: 2505, IS:2506, IS:2514 and IS:4656 for compacting concrete is recommended. Over- vibration and under vibration of concrete are harmful and should be avoided.

8.4 Curing of Concrete

8.4.1 Moist Curing – The concrete should be kept constantly wet for a minimum period of 14 (fourteen) days. Water should be applied on unformed surfaces as soon as it can be done without marring the surface and on formed surfaces immediately after the forms are stripped. The concrete shall be kept constantly wet by ponding or covered with a layer of sacking, canvas, hessian or a similar absorbant material. When air temperature is expected to drop below 5^0C during the curing period, additional covering of cotton/gunny bags, straw or other suitable blanketting material shall be provided so that concrete temperature at surface does not fall below 10^0C.

8.4.2 Curing Compound- Approved curing compounds may be used in lieu of moist curing with the permission of the engineer. Such compounds shall be applied to all

exposed surfaces of the concrete along with stripping of form work. Tests shall be done to ascertain :

(i) Loss of moisture in concrete with and without curing compound.

(ii) Cube strength of concrete with moist curing and curing compound.

(iii) Permeability of concrete.

8.4.3 Steam-Curing- Steam curing can be advantageously used to save time of curing of concrete for transfer of prestress. The optimum steam curing cycle for a particular situation can only be determined by trial and error. However, it has been found satisfactory to use a presteaming period of 4 to 5 hour or rate of temperature rise between 22-33^0 C per hour and a maximum curing temperature of 66-82^0 C for a period such that entire curing cycle does not exceed 18 hour. Rapid temperature changes during the cooling period should be avoided and drop in ambient temperature in the enclosure is not sharper than 20^0 C per hour. The reuse of casting beds and forms alongwith 18 hour steam curing makes it a total 24 hour cycle. Prestress to members in pretension beds should be transferred immediately after the termination of steam curing while the concrete and forms are still warm, otherwise the temperature within the enclosure shall be maintained at over 15^0 C until the prestress is transferred to the concrete.

The steam curing will be considered complete when the concrete has reached the minimum strength at 'Strength at Stress transfer' or handling strength.

8.5 Construction Joints

8.5.1 Concreting shall be carried out continuously upto the construction joints, the position and arrangement of which shall be predetermined by the designer.

8.5.2 The use of construction joints in prestressed concrete work should preferably be avoided. However, if found necessary, they shall be kept to the minimum by adopting proper construction techniques.

8.5.3 The construction joints shall comply with the provisions given at Appendix-A. Properly designed reinforcement shall be provided for transfer of full tensile stress across the joints prior to casting of the next lift.

8.6 Concreting Under Special Conditions

8.6.1 Work in Extreme Weather Conditions- During hot or cold weather, the concreting should be done as per the procedure set out in IS: 7861 (Part I) or IS: 7861 (Part II) with the approval of the engineer. However, calcium chloride or admixtures containing calcium chloride shall not be used.

8.6.2 Under-water Concreting

8.6.2.1 When it is necessary to deposit concrete under water, Tremie method shall be used. The equipment, materials and proportions of the mix to be used shall be submitted to and approved by the engineer before the work is started. The volume or mass of the coarse aggregate shall be not less than one and a half times, not more than twice that of the fine aggregate.

8.6.2.2 Coffer-dams or forms shall be sufficiently tight to ensure still water if practicable, and in any case to reduce the flow of water to less than 3m per minute through the space into which concrete is to be deposited. Coffer-dams or forms in still water shall be sufficiently tight to prevent loss of mortar through the walls. Dewatering by pumping shall not be done while concrete is being placed or untill 24 hours thereafter.

8.6.2.3 Concrete shall be deposited continuously until it is brought to the required height. While depositing, the top surface shall be kept as nearly level as possible and the formation of seams avoided. In the exceptional cases of interruption of concreting which can be resumed within 2 hours, the tremie shall not be taken out of the concrete. Instead it shall be raised and lowered slowly from time to time to prevent the concrete around tremie from setting. Concreting should be resumed by introducing a little richer concrete with a slump of about 200mm for easy displacement of partly set concrete. All tremie tubes shall be properly cleaned before and after use.

8.6.2.3.1 Tremie – The concrete should be coherent and slump shall be more than 150mm but it should not exceed 180mm. When concrete is carried out under water a temporary casing should be installed to the full depth of bore hole or 2m in to non-collapsible stratum, so that fragments of ground cannot drop from the sides of the hole in the concrete as it is placed. The temporary casing may not be required except near the top when concreting under drilling mud. The top section of tremie shall be a hopper large enough to hold one entire batch of the mix or the entire contents of the transporting bucket if any. The tremie pipe shall be not less than 200mm in diameter and shall be large enough to allow a free flow of concrete and strong enough to withstand the external pressure of the water in which it is suspended, even if a partial vacuum develops inside the pipe. Preferably, flanged steel pipe of adequate strength for the job should be used. A separate lifting device shall be provided for each tremie pipe with its hopper at the upper end. Unless the lower end of the pipe is equipped with an approved automatic

check valve, the upper end of the pipe shall be plugged before delivering the concrete to the tremie pipe through the hopper, so that when the concrete is forced down from the hopper to the pipe, it will force the plug (and alongwith it any water in the pipe) down the pipe and out of the bottom end, thus establishing a continuous stream of concrete. It will be necessary to raise the tremie pipe by 25cm to 30cm slowly in order to cause a uniform flow of the concrete, but the tremie shall not be emptied to avoid flow of water into the pipe. At all times even while changing/adding pipes to tremie, the bottom of tremie pipe shall be atleast 600mm below the top of concrete as ascertained by sounding. This will cause the concrete to build up from below instead of flowing out over the surface, and thus avoid formation of laitance layers. If the charge in the tremie is lost while depositing, the tremie shall be raised above the concrete surface, and unless sealed by a check value, it shall be replugged at the top end, as at the beginning, before refilling for depositing concrete.

8.6.2.4 To minimise the formation of laitance, great care shall be exercised not to disturb the concrete as far as possible while it is being deposited.

8.6.3 Concrete in Sea Water

8.6.3.1 Special attention shall be given to the design of the mix to obtain the densest possible concrete; slag, broken brick, soft limestone, soft sandstone, or other porous or weak aggregates shall not be used.

8.6.3.2 As far as possible, preference shall be given to precast members unreinforced, well cured and hardened, without sharp corners, and having trowel-smooth finished surfaces free from crazing, cracks or other defects; plastering should be avoided.

8.6.3.3 No construction joints shall be allowed within 600mm below low water level or within 600mm of the upper and lower planes of wave action. Where unusually severe conditions or abrasion are anticipated such parts of the work shall be protected by bituminous or silico-fluoride coating or stone facing bedded with bitumen.

8.6.3.4 In reinforced concrete structures, care shall be taken to protect the reinforcement from exposure to saline atmosphere during storage and fabrication.

8.6.4 Concrete in Aggressive Soils and Water

8.6.4.1 General – The destructive action of aggressive waters on concrete is progressive. The rate of deterioration which varies with the alkali resisting property of the cement used, decreases as the concrete is made stronger and more impermeable, and increases as the salt content of the water increases. Where structures are only partially immersed or are in contact with aggressive soils or waters on one side only, evaporation may cause serious concentrations of salts with subsequent deterioration, even where the original salt content of the soils or water is not high. The selection of type of cement, therefore, should be made after thorough investigation. For particular problems, engineer-incharge should decide upon the method.

8.6.4.2 No concrete shall be allowed to come in contact with sea water within 72 hours of casting.

8.7 Sampling, Strength Tests and Acceptance Criteria

8.7.1 General – Samples from fresh concrete shall be taken as per IS:1199 and cubes shall be made, cured and tested at 28 days in accordance with IS: 516.

8.7.1.1 In order to get a relatively quick idea of the quality of concrete, optional tests on beams for modulus of rupture at 72±2 hours or at 7 days, or compressive strength tests at 7 days may be carried out in addition to 28 days compressive strength tests. For this purpose, the values given in **Table 7** may be taken for general guidance in case of concrete made with ordinary Portland cement. In all cases, the 28 days compressive strength specified in Table 2 shall alone be the criterion for acceptance or rejection of the concrete.

TABLE 7 : OPTIONAL TESTS REQUIREMENTS OF CONCRETE

(Clause 8.7.1.1)

GRADE OF CONCRETE	COMPRESSIVE STRENGTH ON 15 cm CUBES	MODULUS OF RUPTURE BY BEAM TEST Min.	
	Min. at 7 days	Min. at 72±2h	Min. at 7 days
(1)	(2)	(3)	(4)
	N/mm^2	N/mm^2	N/mm^2
M20	13.5	1.7	2.4
M25	17.0	1.9	2.7
M30	20.0	2.1	3.0
M35	23.5	2.3	3.2
M40	27.0	2.5	3.4
M45	30.0	2.7	3.6
M50	33.5	2.9	3.8
M55	37.0	3.1	4.0
M60	40.0	3.3	4.2

8.7.2 Frequency of sampling

8.7.2.1 Sampling Procedure – A random sampling procedure shall be adopted to ensure that each concrete

batch shall have a reasonable chance of being tested: that is, the sampling should be spread over the entire period of concreting and cover all mixing units.

8.7.2.2 Frequency - The minimum frequency of sampling of concrete of each grade shall be in accordance with the following :

Quantity of concrete in the work, m^3	Number of samples
1-5	1
6-15	2
16-30	3
31-50	4
51 & above	4 plus one additional sample for each additional 50 m^3 or part thereof.

Note - At least one sample comprising of 3 cubes shall be taken from each shift.

8.7.3 Test Specimen- Three test specimens shall be made from each sample for testing at 28 days. Additional cubes may be required for various purposes such as to determine the strength of concrete at 7 days or at the time of striking the formwork, or to check the testing error. Additional cubes may also be required for testing cubes cured by accelerated methods as described in IS:9013. The specimen shall be tested as described in IS:516.

8.7.4 Test Strength of Sample – The test strength of the sample shall be the average of the strength of three specimens. The individual variation should not be more than ±15 per cent of the average. If more, the test results of the sample are invalid. When individual variation exceeds this limit, the procedure for the fabrication of specimen and calibration of the testing machine should be checked.

8.7.5 Standard Deviation

8.7.5.1 Standard Deviation Bases on Test Results

(a) **Number of Test Results-** The total number of test results required to constitute an acceptable record for calculation of standard deviation shall not be less than 30. Attempts should be made to obtain 30 test results, as early as possible, when a mix is used for the first time.

(b) **Standard Deviation to be brought up to date-** The calculation of the standard deviation shall be brought up to date after every change of mix design and at least once a month.

8.7.5.2 Determination of Standard Deviation

(a) Concrete of each grade shall be analysed separately to determine its standard deviation.

(b) The standard deviation of concrete of a given grade shall be calculated using the following formula from the results of individual tests of concrete of that grade obtained as specified in 8.7.4:

Estimated standard deviation,

$$Sd = \sqrt{\frac{\sum \Delta^2}{n-1}}$$

where,

Δ is the deviation of the individual test strength from the average strength of n samples ;and n is the number of sample test results.

(c) When significant changes are made in the production of concrete batches(for example changes in the materials used, mix design, equipment or technical control), the standard deviation value shall be separately calculated for such batches of concrete.

8.7.5.3 Assumed Standard Deviation – Where sufficient test results for a particular grade of concrete are not available, the value of standard deviation given in Table 8 may be assumed.

TABLE 8: ASSUMED STANDARD DEVIATION (Clause 8.7.5.3)

GRADE OF CONCRETE	ASSUMED STANDARD DEVIATION N/mm^2
M20	4.6
M25	5.3
M30	6.0
M35	6.3
M40	6.6
M45	7.0
M50	7.4
M55	7.6
M60	7.8

However, when adequate past records for a similar grade exist and justify to the designer a value of standard deviation different from that shown in Table 8, it shall be permissible to use that value.

8.7.6 Acceptance Criteria

8.7.6.1 Compressive strength.

When both the following conditions are met, the concrete complies with the specified compressive strength:

(a) The mean strength determined from any group of four consecutive test results complies with the appropriate limits in column A of table 9 ;

(b) Any individual test results complies with the appropriate limits in Column B of table 9.

8.7.6.2 Flexural strength when both the following conditions are met, the concrete complies with the specified flexural strength:

(a) The mean strength determined from any group of four consecutive test results exceeds the specified characteristic strength by at least 0.3 N/mm^2.

(b) The strength determine from any test result is not less than the specified characteristic strength less 0.3 N/mm^2.

TABLE-9: CHARACTERISTIC COMPRESSIVE STRENGTH COMPLIANCE REQUIREMENTS

(Clause 8.7.6.1, 8.7.6.2)

Specified grade	Group of test results	A The mean of the group of test result exceeds the specified characteristic compressive strength by at least:	B Any individual test result is not less than the characteristic compressive strength less:
		N/mm^2	N/mm^2
M20 & above	Any con-secutive 4	3	3

8.7.6.3 Quantity of Concrete Represented by Strength Test Results- The quantity of concrete represented by a group of 4 consecutive test results shall include the batches from which the first and last samples were taken together with all intervening batches.

For the individual test result requirements given in column B of table-9 or in item (b) of 8.7.6.2 only the particular batch from which the sample was taken shall be at risk.

Where the mean rate of sampling is not specified the maximum quantity of concrete that four consecutive test results represent shall be limited to $60m^3$.

8.7.6.4 If the concrete is deemed not to comply pursuant to 8.7.6.2, the structural adequacy of the parts affected shall be investigated and any consequential action as needed shall be taken.

8.7.6.5 Concrete of each grade shall be assessed separately.

8.7.6.6 Concrete shall be assessed daily for compliance.

8.7.6.7 Concrete is liable to be rejected if it is porous or honey combed: its placing has been interrupted without providing a proper construction joint. The reinforcement has been displaced beyond the tolerances specified: or construction tolerances have not been met. However, the hardened concrete may be accepted after carrying out suitable remedial measures to the satisfaction of the engineer.

8.8 Supervision- It is exceedingly difficult and costly to alter concrete once placed. Hence, constant and strict supervision by a competent person of all the items of the construction is necessary during the progress of the work, including the proportioning and mixing of the concrete. Supervision by a competent person is also of extreme importance to check the reinforcement and its placing before being covered.

8.8.1 Before any important operation, such as concreting or stripping of the formwork is started, adequate notice shall be given to the engineer.

8.9 Pumpable Concrete

8.9.1 General- Pumpable concrete is the concrete which is conveyed by pressure through either rigid pipe or flexible hose and discharged directly into the desired area, it is especially used where space for construction equipment is very limited.

8.9.2 Pumping Rate and Range- Depending on the equipment, pumping rate should be 10 to 70m^3 per hour. Effective pumping range is upto 300m horizontally and 90m vertically.

8.9.3 Proportioning Pumpable Concrete

8.9.3.1 Basic Consideration- More emphasis on quality control is essential to the proportioning and use of a dependable pump mix. Concrete mixes for pumping must be plastic. Particular attention must be given to the mortar and to the amounts and sizes of coarse aggregates.

8.9.3.2 The maximum size of angular coarse aggregate is limited to one-third of smallest inside diameter of the hose or pipe. Provisions should be made for elimination of oversized particles in the concrete by finish screening or by careful selection of aggregates.

8.9.4 Pumping Concrete – Proper planning of concrete supply, pump locations, line layout, placing sequences and the entire pumping operation will result in saving of cost and time. The pump should be placed as near the placing area as practicable and the entire surrounding area must have adequate bearing strength. Lines from the pump to the placing area should be laid out with a minimum of bends. The pipe line shall be rigidly supported.

8.9.4.1 While pumping downward 15m or more, it is desirable to provide an air release valve at the middle of the top bend to prevent vacuum or air build-up. When pumping upward, it is desirable to have a valve near the pump to prevent reverse flow.

9 GROUTING OF PRE-STRESSING CABLES.

9.1 A recommended practice for grouting of cables is given at Appendix D.

10. LIMIT STATE REQUIREMENTS

10.1 General – In the method of design based on limit state concept, the structure shall be designed so as to ensure an adequate degree of safety and serviceability. The acceptable limit for each of the safety and serviceability requirements is called a 'Limit State'. For this purpose the limit states of 10.2 and 10.3 shall be considered. The usual approach will be to design on the basis of the limit state expected to be most critical and then to check that the remaining limit states will not be reached and that all other requirements will be met.

Consideration of other factors, such as, deflection, fatigue and durability, will need to be made as referred to in 10.4.

10.2 Serviceability Limit States – The design shall be such that the structure will not suffer local damage which would shorten its intended life or incur expensive maintenance costs. In particular, calculated crack widths shall not exceed those permitted in 10.2.1.

10.2.1 Cracking- Cracking of concrete shall not adversely affect the appearance or durability of the structure. The engineer should satisfy himself that any cracking will not be excessive, having regard to the requirements of the particular structure and the conditions of exposure. In the absence of special investigations, the following limit shall be adopted.

(a) Reinforced concrete – Design crack widths, as calculated in accordance with 15.9.8.2, shall not exceed the values given in Table 10 under the loading given in 11.3.2 :

TABLE 10: DESIGN CRACK WIDTHS

[Cl. 10.2.1 (a)]

Exposure Conditions	Design crack width in mm
Moderate	0.20
Severe	0.10
Extreme	0.10

Note – Exposure conditions are as defined in 5.4.1.

(b) Prestressed Concrete Structures and Elements –

No tensile stresses are permitted and therefore, no cracks shall occur under the loading given in 11.3.2.

10.2.2 Stress Limitations- To prevent unacceptable deformations from occurring, compressive stresses in concrete and stresses in steel should be calculated by linear elastic analysis for the load combinations given under 11.2 in any of the following applications :

(a) for all prestressed concrete construction;

(b) for all composite construction;

(c) where the effects of differential settlement, temperature difference, the creep and shrinkage of concrete are not considered at the ultimate state :

10.2.2.1 For reinforced concrete and prestressed concrete, the compressive and tensile stress limitations are as specified in Table 11.

TABLE 11. STRESS LIMTATIONS FOR THE SERVICEABILITY LIMIT STATE

(Clause 10.2.2)

Material	Type of stress under design loading	Type of construction	
		RCC	PSC
Concrete	Triangular or near triangular compressive stress distribution (e.g. due to bending)	$0.50f_{ck}$	$0.40f_{ck}$
	Uniform or near uniform compressive stress (e.g. due to axial loading)	$0.38f_{ck}$	$0.30f_{ck}$
Reinforcement	Compression Tension	$0.75f_y$	Not applicable
Pre-stressing tendons	Tension	Not applicable	Deemed to be satisfied by 16.8.1

NOTE 1– The above stress limitations have been derived from 12.2 after making allowance according to Table 13 (see 12.4.2).

NOTE 2 – See 17.3.3 for limiting flexural stresses in joints for post-tensioned segmental construction.

10.3 Ultimate Limit States

10.3.1 Rupture or Instability – The assessment of the structure under design loads appropriate to this limit shall ensure that prior collapse of the structure does not take place as a result of rupture of one or more critical sections, buckling caused by elastic or plastic instability or overturning.

The effects of creep and shrinkage of concrete, temperature difference and differential settlement need not be considered at the ultimate limit state provided that these effects have been included in the appropriate load combinations to check the stress limitations given in 10.2.2.1 for the serviceability limit state.

10.4 Other Considerations

10.4.1 Deflections- The deflection of the structure or any part of it, shall not such as to affect adversely the appearance or efficiency of the structure.

10.4.1.1 The appearance and function of concrete superstructures are normally unaffected although calculations may be required in the following circumstances :

(a) where minimum specified clearances may be violated;

(b) where drainage difficulties might ensue;

(c) where method of construction may require careful control of profile, e.g. at discontinuities in serial construction, and where decks comprise abutting prestressed concrete beams.

10.4.2 Fatigue – The fatigue life shall comply with the requirements of 13.4.

10.4.3 Durability – The specifications in this code regarding drainage for the deck (see 15.2.2.1), concrete cover to the reinforcement (see 15.9.2) and acceptable crack widths (see 10.2.1) in association with the limits given in 5.4 are intended to meet the durability requirements of almost all bridge structures. Where more severe environments are encountered, however, additional precautions may be necessary, and specialist literature shall be referred to.

11. LOADS, LOAD COMBINATIONS AND PARTIAL LOAD FACTORS

11.1 Loads – The values of loads as given in IRS Bridge rules shall be taken as characteristic loads for the purpose of this code.

11.1.1 For design of concrete bridges of span 30m and larger, an appropriate temperature gradient shall be considered. In the absence of any data in this regard, depending on the environmental conditions, a linear gradient of temperature of 5^0C to 10^0C between the top and bottom fibres may be considered for design.

The effect of difference in temperature between outside and inside of box girders shall also be considered in design.

11.1.2 Creep and shrinkage of concrete and prestress (including secondary effects in statically in determinate structures) are load effects associated with the nature of structural material being used; where they occur, they shall be regarded as permanent loads.

11.2 Combinations of Loads

11.2.1 Combinations of loads – Following five combinations of loads are considered.

11.2.1.1 Combinations 1 – The permanent loads i.e. dead load, superimposed loads etc. together with the appropriate live loads.

11.2.1.2 Combinations 2 – The load to be considered are the loads in combination 1, together with those due to wind/ earthquake, and where erection is being considered temporary erection loads.

11.2.1.3 Combinations 3 –The load to be considered are the loads in combination 1, together with those arising from restraint due to the effect of temperature range and difference and where erection is being considered temporary erection loads.

11.2.1.4 Combinations 4 – The load to be considered are the permanent loads, together with the loads due to friction at bearings.

11.2.1.5 Combinations 5- Dead load, superimposed dead load, together with derailment loads.

11.3 Partial Load Factors – The factors by which the design loads are obtained from the characteristic loads are specified in 11.3.1.

11.3.1 Design loads, Q^* are the loads obtained by multiplying the characteristics load, Q_k by Y_{fL} the partial safety factor for loads which takes into account the following: -

1. Possible unfavourable deviations of the loads from their characteristic values.

2. Inaccurate assessment of the loading, unforeseen stress distribution in the structure and variation in dimensional accuracy achieved in construction.

3. Reduced probability that various loads acting together will all attain their characteristic values simultaneously.

The values of the function Y_{fL} for the various loads are given in Table 12.

11.3.2 Serviceability Limit State – For the limitations given in 10.2.1, load combination 1 only shall be considered. For the stress limitations given in 10.2.2, load combinations 1 to 5 shall be considered.

The value of Y_{fL} for creep and shrinkage of concrete and prestress (including secondary effects in statically indeterminate structures) shall be taken as 1.0.

11.3.3 Ultimate Limit State – To check the provisions of 10.3 load combinations 1 to 4 shall be considered.

The value of Y_{fL} for the effects of shrinkage and, where relevant, of creep shall be taken as 1.2.

In calculating the resistance of members to vertical shear and torsion Y_{fL} for the prestressing force shall be taken as 1.15 where it adversely affects the resistance and 0.87 in other cases. In calculating secondary effects in statically indeterminate structures Y_{fL} for prestressing force may be taken as 1.0.

11.3.4 Deflection – Minimum specified clearances shall be maintained under the action of load combination 1.

The appearance and drainage characteristics of the structure shall be considered under the action of permanent loads only.

11.3.4.1 The values of Y_{fL} for the individual loads shall be those appropriate to the serviceability limit state.

TABLE 12

LOADS TO BE TAKEN IN EACH COMBINATION WITH APPROPRIATE Y_{fL}
(Clauses 11.2 and 11.3)

LOAD		LIMIT STATE	Y_{fL} TO BE CONSIDERED IN COMBINATION				
			1	2	3	4	5
Dead weight of concrete		ULS SLS	1.25 1.00	1.25 1.00	1.25 1.00	1.25 1.00	1.25 1.00
Superimposed dead load		ULS SLS	2.00 1.20	2.00 1.20	2.00 1.20	2.00 1.20	2.00 1.00
Wind	During erection	ULS SLS	- -	1.25 1.00	- -	- -	- -
	with dead and superimposed dead loads only and for members primarily resisting wind loads.	ULS SLS	- -	1.60 1.00	- -	- -	- -
	With dead plus superimposed dead plus other appropriate combination 2 loads.	ULS SLS	- -	1.25 1.00	- -	- -	- -
	Relieving effect of wind	ULS SLS	- -	1.00 1.00	- -	- -	- -
Earth quake	During erection	ULS SLS	- -	1.25 1.00	- -	- -	- -
	With dead and superimposed dead loads only	ULS SLS	- -	1.60 1.00	- -	- -	- -
	With dead plus superimposed dead plus other appropriate combination 2 loads.	ULS SLS	- -	1.25 1.00	- -	- -	- -
Temperature	Restraint against movement except frictional	ULS SLS	- -	- -	1.50 1.00	- -	- -
	Frictional restraint	ULS SLS	- -	- -	- -	1.50 1.00	- -
	Differential temperature effect	ULS SLS	- -	- -	1.15 0.80	- -	- -
Differential settlement		ULS SLS	As specified by engineer				
Earth Pressure	Fill retained and or live load surcharge	ULS SLS	1.70 1.00	1.70 1.00	1.70 1.00	1.70 1.00	- -
	relieving effect	ULS	1.00	1.00	1.00	1.00	-
Erection temporary loads (when being considered)		ULS	-	1.30	1.30	-	-
Live load on foot path		ULS SLS	1.50 1.00	1.25 1.00	1.25 1.00	- -	- -
Live load		ULS SLS	1.75 1.10	1.40 1.00	1.40 1.00	- -	- -
Derailment loads		(As specified by bridge rules for combination 5 only)					

NOTE 1-ULS : Ultimate limit state SLS : serviceability limit state

NOTE 2- Superimposed dead load shall include dead load of ballast, track, ballast retainer, precast footpath, wearing course, hand rails, utility services,kerbs etc

NOTE 3- Wind and earth quake loads shall not be assumed to be acting simultaneously.

NOTE 4- Live load shall also include dynamic effect, forces due to curvature exerted on track, longitudinal forces, braking forces and forces on parapets.

12 CHARACTERISTIC STRENGTHS AND PARTIAL SAFETY FACTORS FOR MATERIALS

12.1 Characteristic Strengths

12.1.1 Characteristic strengths is that strength below which not more than 5% of possible test results may be expected to fall.

12.1.2 The characteristic cube strengths of concrete are given in 5.1. Until the relevant Indian Standard Specifications for reinforcing steel and prestressing steel are modified to include the concept of characteristics strength, the characteristic strength shall be assumed as the minimum yield/0.2 percent proof stress for reinforcing steel and as the minimum ultimate tensile stress/breaking load for prestressing steel, specified in the relevant Indian Standard Specifications (see 4.5 and 4.6).

12.2 Material properties for Analysis

12.2.1 In general, in analysing a structure to determine the load effects, the material properties appropriate to the characteristic strength shall be used, irrespective of the limit state being considered.

12.2.2 For the analysis of sections, the material properties to be used for the individual limit states are as follows:

(a) Serviceability limit state - The characteristic stresses, which shall be taken as $0.75f_y$ for reinforcement and $0.5\ f_{ck}$ for concrete in compression.

(b) Ultimate limit state - Characteristic strengths given in 12.3.1. The appropriate Y_m values are given in 12.4.

12.3 Material Properties for Concrete and Steel

12.3.1 Concrete – In assessing the strength of sections at the ultimate limit state, the design stress-strain curve for concrete may be taken from Fig. 4A, using the value of Y_m for concrete given in 12.4. Equation for the parabolic curve between

$\varepsilon = 0$ and $\varepsilon = 2.44\text{x}10^{-4}\sqrt{f_{ck}/Y_m}$

may be taken as

$$f = \left[5500\sqrt{\frac{f_{ck}}{Y_m}}\right]\varepsilon - \left[\frac{5500^2}{2.68}\right]\varepsilon^2$$

Where f is stress and ε is the strain.

12.3.1.1.Modulus of Elasticity – The modulus of elasticity to be used for elastic analysis shall be appropriate to the cube strength of the concrete at the age considered and in the absence of special investigations may be taken as given in 5.2.2.1.

12.3.2 Reinforcement and prestressing Steel – The design stress-strain curves may be taken as follows:

(a) for reinforcement, from Fig. 4B, using the values of Y_m given in 12.4;

(b) for prestressing steel, from Fig.2 or 3, using the values of Y_m given in 12.4.

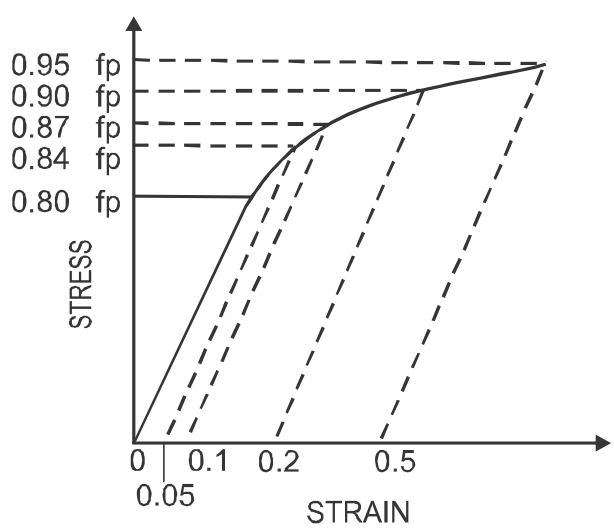

FIG 2: WIRES (STRESS RELIEVED) STRANDS & BARS.

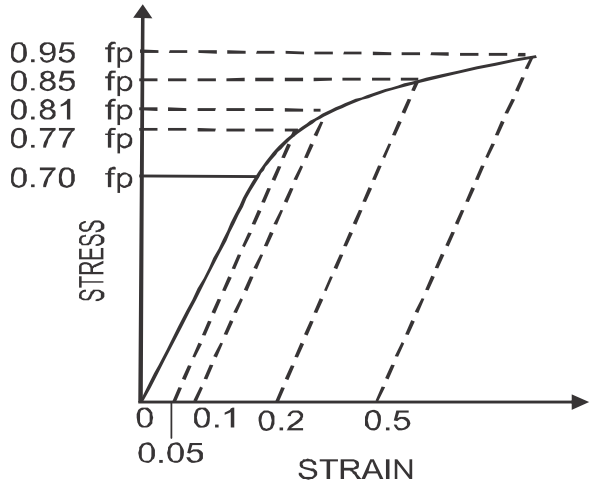

FIG 3: WIRES (AS DRAWN) REPRESENTATIVE STRESS STRAIN CURVES FOR PRE-STRESSING STEEL

12.3.2.1 For reinforcement, modulus of elasticity may be taken from 4.5.3.

12.3.2.2 For prestressing steel, the modulus of elasticity may be taken from 4.6.2.

12.4 Values of Y_m

12.4.1 General – For the analysis of sections, the values of Y_m are given in 12.4.2. and 12.4.3.

12.4.2 Serviceability Limit State – The values of Y_m applied to the characteristic stresses defined in 12.2.2 are given in Table 13 and have been allowed in deriving the compressive and tensile stresses given in Table 11.

TABLE 13: VALUES OF Y_m FOR THE SERVICEABILITY STRESS LIMITATIONS

(Clause 12.4.2)

Material	Type of Stress	Type of Construction	
		RCC	PSC
Concrete	Triangular or near Triangular compressive stress distribution (e.g. due to bending	1.00	1.25
	Uniform or near uniform compressive stress distribu- tion (e.g. due to axial loading)	1.33	1.67
	Tension	Not applicable	
Reinforce-ment	Compression Tension	1.00	N.A.
Pre-Stressing tendons	Tension	NA	Not required

The higher values for prestressed concrete arise because the whole concrete cross section is normally in compression and therefore creep will be greater than in reinforced concrete. Similarly in reinforced concrete creep will be greater where the compressive stress distribution is uniform over the whole cross section.

12.4.3 Ultimate Limit State- For both reinforced concrete and prestressed concrete, the values of Y_m applied to the characteristic strengths are 1.5 for concrete and 1.15 for reinforcement and prestressing tendons.

12.4.4 Fatigue- For reinforced concrete, the value of Y_m applied to the stress range limitations given in 13.4 for reinforcement is 1.0.

12.4.5 Unless specifically stated otherwise all equations, figures and tables given in this code include allowances for Y_m the partial safety factor for material strength.

13 ANALYSIS OF STRUCTURE AND SECTION:

13.1 Analysis of Structure-

13.1.1 General- Global analysis of action shall be undertaken for each of the most severe conditions appropriate to the part under consideration for all the load combinations prescribed in Table 12. The methods of analysis shall satisfy equilibrium requirements, all load effects being shown to be in equilibrium with the applied loads. They shall be capable of predicting all loading effects including, where appropriate, those that cannot be predicted by simple bending theory. The requirements of methods of analysis appropriate to the distribution of forces and deformations, which are to be used in ascertaining that the limit state criteria are satisfied, are given in 13.1.2 and 13.1.3.

13.1.2 Analysis for Serviceability Limit State

13.1.2.1. General- Load effects under each of the prescribed design loadings appropriate to the serviceability limit state shall where relevant, be calculated by elastic methods. The flexural stiffness constants (second moment of area) for sections of discrete members or unit widths of slab elements may be based on any of the following:

(a) Concrete section-The entire member cross section, ignoring the presence of reinforcement.

(b) Gross transformed section-The entire member cross section including the reinforcement transformed on the basis of modular ratio.

(c) Net transformed section-The area of the cross section, which is in compression together with the tensile reinforcement transformed on the basis of modular ratio.

Consistent approach shall be used which reflects the different behaviour of various parts of the structure.

Axial torsional and shearing stiffness constants, when required by the method of analysis, shall be based on the concrete section and used with (a) or (b).

Moduli of elasticity and shear moduli values shall be appropriate to the characteristic strength of the concrete.

13.1.2.2. Method of Analysis and their Requirements – The method of analysis shall ideally take account of all the significant aspects of behaviors of a structure governing its response to loads and imposed deformations.

13.1.3 Analysis for Ultimate Limit State

13.1.3.1 General – Elastic methods may be used to determine the distribution of forces and deformations throughout the structure. Stiffness constants shall be based on the section properties as used for the analysis of the structure at the serviceability limit state (See 13.1.2.1)

13.1.3.2 Method of Analysis and their Requirements – The application of elastic methods of analysis in association with the design loads for the ultimate limit state in general leads to safe lower bound solutions.

When treating local effects, elastic methods may be applied to derive the in plane forces and moments due to out of plane loading.

13.1.3.3 Other methods of analysis (e.g. plastic hinge methods for beams or yield line method for slabs) are beyond the scope of this code. Use of such methods requires the prior approval of the engineer and reference to specialist literature.

13.2 Analysis of Section

13.2.1 Serviceability Limit State – At any section, an elastic analysis shall be carried out to satisfy the recommendations of 10.2. In-plane shear flexibility in concrete flanges (shear lag effects) may be allowed for. This may be done by taking an effective width of flange as given in 15.4.1.2.

13.2.2 Ultimate Limit State – The strength of critical sections shall be assessed in accordance with clauses 15 or 16 to satisfy the recommendations of 10.3. In- plane shear flexibility in concrete flanges (shear lag effects) may be ignored.

13.3 Deflection – Deflection shall be calculated for the most unfavourable distributions of loading for the member (or strip of slab) and may be derived from an elastic analysis of the structure. The material properties, stiffness constants and calculation of deflection may be based on 12.3.1.

13.4 Fatigue - The effect of repeated live loading on the fatigue strength of a bridge shall be considered in respect of reinforcing bars that have been subject to welding.

Welding may be used to connect bars subjected to fatigue loading provided that :

(a) the connection is made to standard workmanship levels as given in 7.1.3 ;

(b) the welded bar is not part of a deck slab spanning between longitudinal and/or transverse members and subjected to the effect of concentrated loads ;

(c) the detail has an acceptable fatigue life determined as described in Appendix-H;

(d) lap welding is not used.

13.4.1 For unwelded reinforcing bars, the stress range under various load combinations for the serviceability limit state shall be limited to 155 N/mm^2 for bars up to 16 mm diameter and to 120 N/mm^2 for bars exceeding 16 mm diameter.

13.5 Combined Global and Local Effects-

13.5.1 General – In addition to the design of individual primary and secondary elements to resist loading applied directly to them, it is also necessary to consider the loading combination that produces the most adverse effects due to global and local loading where these co-exist in an element.

13.5.2 Analysis of Structure – Analysis of the structure may be accompanied either by one overall analysis (e.g. using finite elements) or by separate analysis for local and global effects. In the latter case the forces and moments acting on the element from local and global effects shall be combined as appropriate.

13.5.3 Analysis of section – Section analysis for the combined global and local effects shall be carried out in accordance with 13.2 to satisfy the recommendations of 10.

(a) **Serviceability Limit State**

(1) For reinforced concrete elements, the total crack width due to combined global and local effects shall be determined in accordance with 15.9.8.2**.**

(2) For prestressed concrete elements, co-existent stresses, acting in the direction of prestress, may be added algebraically in checking stress limitations:

(b) **Ultimate Limit State** –The resistance of the section to direct and flexural effects shall be derived from the direct strain due to global effects combined with the flexure strain due to local effects. However, in the case of a deck slab the resistance to combined global and local effects is deemed to be satisfactory if each of these effects is considered separately.

14. PLAIN CONCRETE WALLS

14.1 General – A plain concrete wall is a vertical load bearing concrete member whose greatest lateral dimension is more than four times its least lateral dimension and which is assumed to be without reinforcement when considering its strength.

The recommendations given in 14.2 to 14.11 refer to the design of a plain concrete wall that has a height not exceeding five times its average thickness.

14.2 Moments and Forces in Walls –

Moments, shear forces and axial forces in a wall shall be determined in accordance with 13.1.

The axial force may be calculated on the assumption that the beams and slabs transmitting forces into it are simply supported.

The resultant axial force in a member may act eccentrically due to vertical loads not being applied at the centre of the member or due to the action of horizontal forces. Such eccentricities shall be treated as indicated in 14.3 and 14.4.

The minimum moment in a direction at right angles to the wall shall be taken as not less than that produced by considering the ultimate axial load per unit length acting at an eccentricity of 0.05 times the thickness of the wall.

14.3 Eccentricity in the Plane of the Wall

In the case of a single member this eccentricity can be calculated from statics alone. Where a horizontal force is resisted by several members, the amount allocated to each member shall be in proportion to its relative stiffness provided the resultant eccentricity in any individual member is not greater than one-third of the length of the member. Where a shear connection is assumed between vertical edges of adjacent members an appropriate elastic analysis may be used, provided the shear connection is designed to withstand the calculated forces.

14.4 Eccentricity at Right Angles to Walls or Abutments –

The load transmitted to a wall by a concrete deck may be assumed to act at one-third the depth of the bearing area from the loaded face. Where there is an in situ concrete deck on either side of the member the common bearing area may be assumed to be shared equally by each deck.

The resultant eccentricity of the total load on a member unrestrained in position at any level shall be calculated making full allowance for the eccentricity of all vertical loads and the overturning moments produced by any lateral forces above that level.

The resultant eccentricity of the total load on a member restrained in position at any level may be calculated on the assumption that immediately above a lateral support the resultant eccentricity of all the vertical loads above that level is zero.

14.5 Analysis of Section – Loads of a purely local (as at beam bearings or column bases) may be assumed to be immediately dispersed provided the local stress under the load does not exceed that given in 14.7. Where the resultant of all the axial loads acts eccentrically in the plane of the member, the ultimate axial load per unit length of wall, n_w ,shall be assessed on the basis of an elastic analysis assuming a linear distribution of load along the length of the member assuming no tensile resistance. Consideration shall first be given to the axial force and bending in the plane of the wall to determine the distribution of tension and compression along the wall. The bending moment at right angles to the wall shall then be considered and the section checked for this moment and the compression or tension per unit length at various positions along the wall. Where the eccentricity of load in the plane of the member is zero, a uniform distribution of n_w, may be assumed.

For members restrained in position, the axial load per unit length of member, n_w due to ultimate loads shall be such that:

$$n_w \leq (h - 2e_x) Y_w f_{ck}$$

where,

n_w is the maximum axial load per unit length of member due to ultimate loads;

h is the overall thickness of the section;

e_x is the resultant eccentricity of load at right angles to the plane of the member (see 14.2) (minimum value 0.05h);

f_{ck} is the characteristic cube strength of the concrete;

Y_w is a coefficient, taken as 0.35 for concretes of grade M20 and 0.4 for concrete of grades M25 and above.

14.6 Shear – The resistance to shear forces in the plane of the member may be assumed to be adequate provided the horizontal shear force due to ultimate loads is less than either one-quarter of the vertical load, or the force to produce an average shear stress of 0.45 N/mm^2 over the whole cross section of the member in the case of concretes of Grade M25 or above; where Grade M20 concrete is used, a figure of 0.3 N/mm^2 is appropriate.

14.7 Bearing –Bearing stresses due to ultimate loads of a purely local nature, as at girder bearing, shall be limited in accordance with 17.2.3.3.

14.8 Deflection of Plain Concrete Walls – The deflection in a plain concrete member will be within acceptable limits if the preceding recommendations have been followed.

14.9 Shrinkage and Temperature Reinforcement – For plain concrete members exceeding 2m in length and cast in-situ it is necessary to control cracking arising from shrinkage and temperature effects, including temperature rises caused by the heat of hydration released by the cement. Reinforcement shall be provided in the direction of any restraint to such movement.

The area of reinforcement, A_s , parallel to the direction of each restraint, shall be such that.

$$A_s \geq K_r (A_c - 0.5 A_{cor})$$

where,

K_r is 0.005 for Grade Fe415 reinforcement and 0.006 for Grade Fe250 reinforcement;

A_c is the area of the gross concrete section at right-angles to the direction of the restraint;

A_{cor} is the area of the core of the concrete section, A_c , i.e. that portion of the section more than 250mm from all concrete surfaces.

14.9.1 Shrinkage and Temperature Reinforcement-shall be distributed uniformly around the perimeter of the concrete sections and spaced at not more than 150mm.

14.10 Stress Limitations for Serviceability Limit State – The wall shall be designed so that the concrete compressive stresses comply with Table 11 and concrete tensile stresses do not increase 0.034 f_{ck}.

15. DESIGN AND DETAILING; REINFORCED CONCRETE

15.1 General;

15.1.1 This clause gives methods of analysis and design which in general ensure that, for reinforced concrete structures, the recommendations set out in 10.2 & 10.3 are met. In certain cases the assumptions made in this clause may be inappropriate and the engineer shall adopt a more suitable method having regard to the nature of the structure in question.

15.1.2 All RCC structures shall be designed for safety, serviceability and durability requirements (structural and non-structural loads caused by environment).

15.1.3 The bridges shall be designed for the service life as given below:-

Type of Structure	Design life in Yrs
Bridges in sea	50
Bridges in coastal areas	80
Bridges in rest of India	100

15.2 Limit State Design of Reinforced Concrete-

15.2.1 Basis of Design- Clause 15 follows the limit state philosophy set out in clause 10 but as it is not possible to assume that a particular limit will always be the critical one, design methods are given for both the ultimate and serviceability limit states.

In general, the design of reinforced concrete members is governed by the ultimate limit state, but the limitations on crack width and, where applicable, stresses at the serviceability limit state given in 10.2.3 shall also be met.

15.2.1.1 Where a plastic method or redistribution of moments is used for the analysis of the structure at the ultimate limit state, or where critical parts of the structure are subjected to the 'severe' category of exposure, the design is likely to be controlled by the serviceability limit state of cracking.

15.2.2 Durability- A proper drainage system shall be provided on the deck as indicated in 15.2.2.1. In 15.9.2 guidance is given on the nominal cover to reinforcement that shall be provided to ensure durability. For other durability requirements of concrete like maximum water cement ratio, minimum grade of concrete, minimum cement contents, maximum crack width etc., Clause 5.4 and 10.2.1 shall be referred.

15.2.2.1 Drainage for the Deck – A complete drainage system for the entire deck shall be provided to ensure that the drainage water is disposed off quickly from the deck to a safe location. For bridges level in longitudinal profile, minimum cross slopes in the deck shall be kept at 2.5%.

15.2.3 Loads – In clause 15, the design load (see 11.3) for the ultimate and serviceability limit states are referred to as 'ultimate loads' and 'service loads' respectively.

In clause 15, when analysing sections, the terms 'strength', 'resistance' and 'capacity' are used to describe the design strength of the section.

15.2.4 Strength of Materials

15.2.4.1 Definition of Strengths- In clause 15, the design strengths of materials for the ultimate limit state are expressed in all the tables and equations in terms of the 'characteristic strength' of the material. Unless specifically stated otherwise, all equations, figures and tables include allowances for Y_m, the partial safety factor for material strength (see 12.4.5.)

15.2.4.2 Characteristic Strength of Concrete- The characteristic cube strengths of concrete for various grades are given in Table 2. These values do not include any allowance for Y_m.

15.2.4.3 Characteristic Strengths of Reinforcement- Until the relevant Indian Standard Specifications for reinforcing steel are modified to include the concept of characteristic strength, the characteristic value for various grades of steel shall be assumed as the minimum yield/0.2 percent proof stress specified in the relevant Indian Standard Specifications (see 4.5). These values do not include any allowance for Y_m. The characteristic strength of Thermo Mechanically Treated bars shall be assumed at par with reinforcement bars conforming to IS: 1786.

15.3 Structures and Structural Frames

15.3.1 Analysis of Structures- Structures shall be analysed in accordance with the recommendations of 13.1

15.3.2 Redistribution of Moments – Redistribution of moments obtained by rigorous elastic analysis under the limit state may be carried out provided the following conditions are met;

(a) Checks are made to ensure that adequate rotation capacity exists at sections where moments are reduced, making reference to appropriate test data.

In the absence of a special investigations, the plastic rotation capacity may be taken as the lesser of:-

(1) $$0.008+0.035\,(0.5-\frac{d_c}{d_e})$$

or

(2) $$\frac{0.6}{d-d_c}\phi$$

but not less than 0 or more than 0.015.

where,

d_c is the calculated depth of concrete in compression at the ultimate limit state

d_e is the effective depth for a solid slab or rectangular beam, otherwise the overall depth of the compression flange.

ϕ is the diameter of the smallest tensile reinforcing bar

d is the effective depth to tension reinforcement.

(b) Proper account is taken of changes in transverse moments, transverse deflections and transverse shears consequent on redistribution of longitudinal moments by means of a special investigation based on a non-linear analysis.

(c) Shears and reactions used in design are taken as those calculated either prior to redistribution or after redistribution, whichever is greater.

(d) The depth of the members of elements considered is less than 1200mm.

15.4 Beams

15.4.1 General

15.4.1.1 Effective Span- The effective span of a simply supported member shall be taken as the smaller of;

(a) the distance between the centers of bearings or other supports; or

(b) the clear distance between supports plus the effective depth.

15.4.1.1.1 The effective span of a member framing into supporting members shall be taken as the distance between the shear centers of the supporting member.

15.4.1.1.2 The effective span of a continuous member shall be taken as the distance between centers of supports except where, in the case of beams on wide columns, the effect of column width is included in the analysis.

15.4.1.1.3 The effective length of a cantilever shall be taken as its length from the face of the support plus half its effective depth except where it is an extension of a continuous beam when the length to the centre of the support shall be used.

15.4.1.2 Effective Width of Flanged Beams

15.4.1.2.1 In analysing structures, the full width of flanges may be taken as effective.

15.4.1.2.2 In analysing sections at the serviceability limit state, and in the absence of any more accurate determination, the effective flange width shall be taken as the width of the web plus one-tenth of the distance between the points of zero moment (or the actual width of the outstand if this is less) on each side of the web. For a continuous beam the points of zero moment may be taken to be at a distance of 0.15 times the effective span from the support.

In analysing sections at the ultimate limit state the full width of the flanges may be taken as effective.

15.4.1.3 Slenderness Limits for Beams

To ensure lateral stability, a simply supported or continuous beam shall be so proportioned that the clear distance between lateral restraints does not exceed $60b_c$ or $250b_c^2/d$, whichever is the lesser,

where,

d is the effective depth to tension reinforcement; and

b_c is the breadth of the compression face of the beam midway between restraints.

15.4.1.3.1 For cantilevers with lateral restraint provided only at the support, the clear distance from the end of the cantilever to the face of the support shall not exceed $25b_c$ or $100b_c^2/d$ whichever is lesser.

15.4.2 Resistance Moment of Beams

15.4.2.1 Analysis of Sections – When analysing a cross section to determine its ultimate moment of resistance, the following assumptions shall be made :

(a) The strain distribution in the concrete in compression and the strains in the reinforcement, whether in tension or compression, are derived from the assumption that plane sections remain plane;

(b) The stresses in the concrete in compression are either derived from the stress-strain curve in Fig.4A with Y_m = 1.5 or, in the case of rectangular sections and in flanged, ribbed and voided sections where the neutral axis lies within the flange, the compressive strength may be taken as equal to 0.4 f_{ck} over the whole compression zone. In both the cases the strain at the outermost compression fibre at failure is taken as 0.0035;

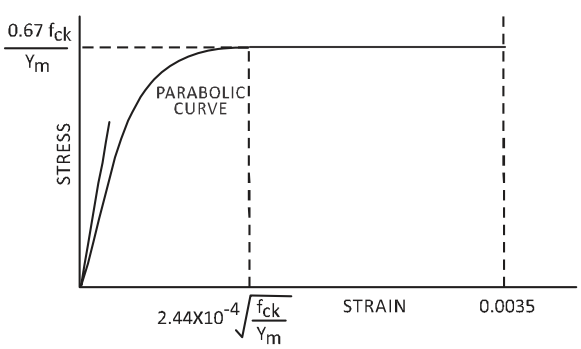

FIG 4A: SHORT TERM DESIGN STRESS STRAIN CURVE FOR NORMAL WEIGHT CONCRETE

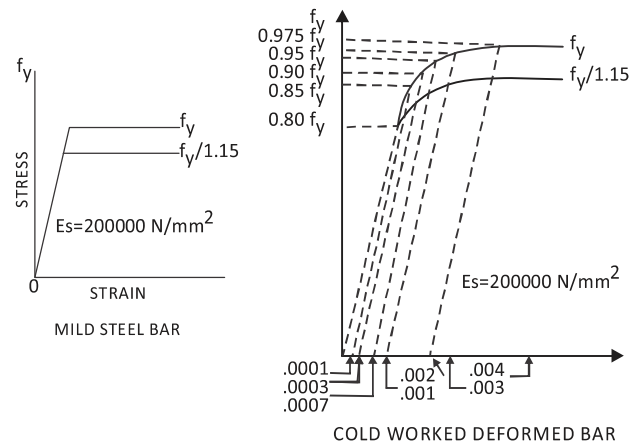

FIG 4B: REPRESENTATIVE STRESS STRAIN CURVE FOR REINFORCEMENT

(c) The tensile strength of the concrete is ignored; and

(d) The stresses in the reinforcement are derived from the stress-strain curves in Fig. 4B with Y_m = 1.15.

In addition, if the ultimate moment of resistance, calculated in accordance with this clause, is less than 1.15 times the required value, the section shall be proportioned such that the strain at the centroid of the tensile reinforcement is not less than:

$$0.002 + \frac{f_y}{E_s Y_m}$$

where,

E_s is the modulus of elasticity of the steel. As an alternative, the strains in the concrete and the reinforcement, due to the application of ultimate loads, may be calculated using the following assumptions :

(e) The strain distribution in the concrete in compression and the strains in the reinforcement, whether in tension or compression, are derived from the assumption that plane sections remain plane ;

(f) The stresses in the concrete in compression are derived from the stress-strain curve given in Fig.4A with Y_m=1.5 ;

(g) The tensile strength of the concrete is ignored ; and

(h) The stresses in the reinforcement are derived from the stress-strain curves in Fig.4B with Y_m=1.15.

In using the alternative method of analysis, the calculated strain due to the application of ultimate loads at the outermost compression fibre of the concrete shall not exceed 0.0035 and the strain at the centroid of the tensile reinforcement shall be not less than $0.002+f_y/(E_s Y_m)$ except where the requirement for the calculated strain in the concrete, due to the application of 1.15 times the ultimate loads, can be satisfied.

15.4.2.1.2 In the analysis of a cross section of a beam that has to resist a small axial thrust, the effect of the ultimate axial force may be ignored if it does not exceed 0.1 f_{ck} times the cross-sectional area.

15.4.2.2 Design Formulae – Provided that the amount of redistribution of the elastic ultimate moments has been less than 10%, the following formulae may be used to calculate the ultimate moment of resistance of a solid slab or rectangular beam, or of a flanged beam, ribbed slab or voided slab when the neutral axis lies within the flange.

15.4.2.2.1 For sections without compression reinforcement the ultimate moment of resistance may be taken as the lesser of the values obtained from equations 1 and 2. Equations 3 & 4 may be used for sections with compression reinforcement.

A rectangular stress block of maximum depth 0.5d and a uniform compression stress of $0.4f_{ck}$ has been assumed (Fig.5).

$M_u = (0.87f_y)A_s z$ ….. (equation 1)

$M_u = 0.15f_{ck}bd^2$ ….. (equation 2)

$M_u = 0.15f_{ck}bd^2+0.72f_y A_{s'}(d-d')$ ….. (equation 3)

$(0.87f_y)A_s=0.2f_{ck}bd+0.72f_y A_{s'}$ ….. (equation 4)

where,

M_u is the ultimate resistance moment;

A_s is the area of tension reinforcement;

$A_{s'}$ is the area of compression reinforcement;

b is the width of the section;

d is the effective depth to the tension reinforcement;

d' is the depth to the compression reinforcement;

f_y is the characteristic strength of the reinforcement;

z is the lever arm; and;

f_{ck} is the characteristic strength of the concrete.

When d'/d is greater than 0.2, equation 3 should not be used and the resistance moment shall be calculated with the aid of 15.4.2.1.

The lever arm, z, in equation 1 may be

calculated from the equation:

$$z = 1 - \frac{1.1 f_y A_s}{f_{ck} bd} d \quad \text{…….. (equation 5)}$$

The value z shall not be normal taken as greater than 0.95d.

15.4.2.2.2. The ultimate resistance moment of a flanged beam may be taken as the lesser of the values given by equations 6 & 7 where h_f is the thickness of the flange.

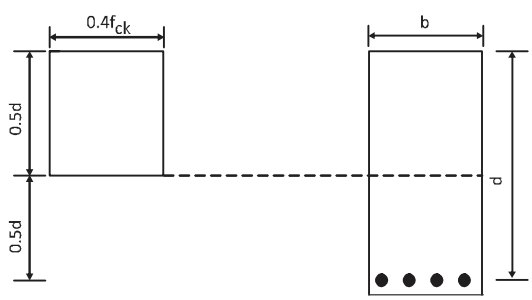

FIG 5 : STRESS BLOCK OF RECTANGULAR BEAM

$M_u = (0.87f_y) A_s(d-h_f/2)$…(equation 6)

$M_u = (0.4f_{ck})bh_f(d-h_f/2)$…(equation 7)

Where it is necessary for the resistance moment to exceed the value given by equation7, the section shall be analysed in accordance with 15.4.2.1.

15.4.3 Shear Resistance of Beams

15.4.3.1 Shear Stress – The shear stress, v, at any cross section shall be calculated from:-

$$v = \frac{V}{bd} \quad \text{.....(equation.8)}$$

where,

V is the shear force due to ultimate loads.

b is the breadth of the section which, for a flanged beam, shall be taken as the rib width;

d is the effective depth to tension reinforcement.

In no case shall v exceed $0.75\sqrt{f_{ck}}$ or 4.75 N/mm² whichever is the lesser, whatever shear reinforcement is provided.

15.4.3.2 Shear Reinforcement–Shear reinforcement shall be provided as given in Table 14.

TABLE 14:

FORM AND AREA OF SHEAR REINFORCEMENT IN BEAMS
(CLAUSE 15.4.3.2.)

Value of v (N/mm²)	Area of Vertical shear Reinforcement to be provided (mm²)
$v \le sv_c$	$A_{sv} \ge 0.4bs_v / 0.87\ f_{yv}$
$v > sv_c$	$A_{sv} \ge bs_v(v+0.4-sv_c)/0.87f_{yv}$

Note – In the above Table :

- v is the shear stress;
- s is the depth factor (see table 16);
- v_c is the ultimate shear stress in concrete (see table 15);
- A_{sv} is the cross sectional area of all the legs of the stirrups/links at a particular cross section;
- s_v is the spacing of the stirrups along the member;
- f_{yv} is the characteristic strength of strirrup reinforcement but not greater than 415 N/mm².

15.4.3.2.1 Where stirrups combined with bent up bars are used for shear reinforcement, not more than 50% of the shear force $(v+0.4-sv_c)bd$ shall be resisted by bent-up bars. These bars shall be assumed to form the tension members of one or more single systems of lattice girders in which the concrete forms the compression members. The maximum stress in any bar shall be taken as $0.87f_y$. The shear resistance at any vertical section shall be taken as the sum of the vertical components of the tension and compression forces cut by section. Bars shall be checked for anchorage (see 15.9.6.2) and bearing (see 15.9.6.7).

TABLE 15: ULTIMATE SHEAR STRESS IN CONCRETE, v_c
(Clause 15.4.3.2., 15.5.4, 15.6.6. 15.7.5., 17.2.4)

$\frac{100A_s}{bd}$	CONCRETE GRADE				
	M20	M25	M30	M35	M40 or more
%	N/mm²	N/mm²	N/mm²	N/mm²	N/mm²
<0.15	0.31	0.31	0.36	0.37	0.39
0.25	0.37	0.40	0.42	0.44	0.47
0.50	0.47	0.50	0.53	0.56	0.59
1.00	0.59	0.63	0.67	0.70	0.74
2.00	0.74	0.80	0.85	0.89	0.93
>3.0	0.85	0.91	0.97	1.01	1.06

NOTE 1: $b = b_s$ for punching shear cases (see figure 6)

NOTE 2: TABLE 15 is derived from the following relationship:

$$v_c = \frac{0.27}{Y_m}\left\{\frac{100A_s}{b_w d}\right\}^{1/3}\{f_{ck}\}^{1/3}$$

Where Y_m is taken as 1.25 and f_{ck} shall not exceed 40.

15.4.3.2.2 The term A_s in Table 15 is that area of longitudinal reinforcement which continues at least a distance equal to the effective depth beyond the section being considered, except at supports where the full area of tension reinforcement may be used provided the recommendations of 15.9.7 are met.

Where both top and bottom reinforcement is provided the area of A_s used shall be that which is in tension under the loading which produces the shear force being considered.

15.4.3.2.3 The area of longitudinal reinforcement in the tensile zone shall be such that :

$$A_s \geq \frac{V}{2(0.87f_y)}$$

where,

A_s is the area of effectively anchored longitudinal tension reinforcement (see 15.9.7) ;

f_y is the characteristic strength of the reinforcement ;

V is the shear force due to ultimate loads at the point considered.

15.4.3.2.4 The spacing of the legs of stirrups in the direction of the span and at right angles to it shall not exceed 0.75d. In no case shall the spacing exceed 450mm.

15.4.3.3 Enhanced shear strength of sections close to supports - An enhancement of shear strength may be allowed for sections within a distance a_v< 2d from the face of a support, front edge of a rigid bearing or centre line of a flexible bearing.

This enhancement shall take the form of an increase in the allowable shear stress, sv_c to sv_cx 2d/a_v but shall not exceed 0.75 $\sqrt{f_{ck}}$ or 4.75 N/mm^2 whichever is the lesser.

Where this enhancement is used the main reinforcement at the section considered shall continue to the support and be provided with an anchorage equivalent to 20 times the bar size.

TABLE 16: VALUES OF s
(Clause 15.4.3.2, 15.5.4.1., 15.6.6, 15.7.5)

Effective Depth, d (mm)	>2000	1500	1000	500	400	300	250	200	150	<100
Depth Factors	0.70	0.75	0.85	1.00	1.05	1.15	1.20	1.25	1.35	1.50

NOTE: Table 16 is derived from the following relationship:

s = $(500/d)^{1/4}$ or 0.70, whichever is the greater.

15.4.3.4 Bottom Loaded Beams – Where load is applied near the bottom of a section, sufficient vertical reinforcement to carry the load to the top of the section shall be provided in addition to any reinforcement required to resist shear.

15.4.4 Torsion

15.4.4.1 General - Torsion does not usually decide the dimensions of members, therefore torsion design shall be carried out as a check, after the flexural design. This is particularly relevant to some members in which the maximum torsional moment does not occur under the same loading as the maximum flexural moment. In such circumstances reinforcement in excess of that required for flexure and other forces may be used in torsion.

15.4.4.2 Torsionless Systems - In general, where the torsional resistance or stiffness of members has not been taken into account in the analysis of the structure, no specific calculations for torsion will be necessary, adequate control of any torsional cracking being provided by the required nominal shear reinforcement. However, in applying this clause it is essential that sound engineering judgment has shown that torsion plays only a minor role in the behaviour of the structure, otherwise torsional stiffness shall be used in analysis.

15.4.4.3 Stresses and Reinforcement-

Where torsion in a section increases substantially the shear stresses, the torsional shear stress shall be calculated assuming a plastic stress distribution.

Where the torsional shear stress, v_t, exceeds the value $v_{t\,min}$ from Table 17, reinforcement shall be provided. In no case shall the sum of the shear stresses resulting from shear force and torsion ($v+v_t$) exceed the value of the ultimate shear stress, v_{tu} from Table 17 nor in the case of small

section (y_1 < 550mm), shall the torsional shear, v_t exceed $v_{tu}y_1/550$, where y_1 is the larger centerline dimension of a stirrup/link.

TABLE 17: ULTIMATE TORSION SHEAR STRESS (Clause 15.4.4.3)

	CONCRETE GRADE				
	M20 N/mm²	M25 N/mm²	M30 N/mm²	M35 N/mm²	M40 or more N/mm²
$v_{t\,min}$	0.30	0.33	0.37	0.38	0.42
v_{tu}	3.35	3.75	4.10	4.43	4.75

15.4.4.3.1 Torsion reinforcement shall consist of rectangular closed stirrups in accordance with 15.9.6.4 together with longitudinal reinforcement. It shall be calculated assuming that the closed stirrups form a thin walled tube, the shear stresses in which are balanced by longitudinal and transverse forces provided by the resistance of the reinforcement. This reinforcement is additional to any requirements for shear or bending.

15.4.4.4 Treatment of various cross sections :

(a) **Box sections-** The torsional shear stress shall be calculated as :

$$v_t = \frac{T}{2h_{wo}A_o} \quad \text{..... (equation-9)}$$

where,

h_{wo} is the wall thickness where the stress is determined;

A_o is the area enclosed by the median wall line..

Torsion reinforcement shall be provided such that:

$$\frac{A_{st}}{S_v} \geq \frac{T}{2A_o(0.87f_{yv})} \quad \text{.....(equation 10)}$$

$$\frac{A_{sL}}{S_L} \geq \frac{A_{st}}{S_v}\left[\frac{f_{yv}}{f_{yL}}\right] \quad \text{.....(equation 11)}$$

where,

T is the torsional moment due to the ultimate loads;

A_{st} is the area of one leg of a closed stirrup at a section;

A_{sL} is the area of one bar of longitudinal reinforcement;

f_{yv} is the characteristics strength of stirrups.

f_{YL} is the characteristic strength of the longitudinal reinforcement;

S_v is the spacing of the stirrups along the member;

S_L is the spacing of the longitudinal reinforcement ;

In equations 10 and 11, f_{yv} and f_{yL} shall not taken as greater than 415 N/mm².

(b) **Rectangular sections-** The torsional stresses shall be calculated from the equation :

$$v_t = \frac{2T}{h^2_{min}(h_{max} - h_{min}/3)} \quad \text{.....(equation 9a)}$$

where,

h_{min} is the smaller dimension of the section;

h_{max} is the larger dimension of the section;

Torsion reinforcement shall be provided such that:

$$\frac{A_{st}}{S_v} \geq \frac{T}{1.6x_1y_1(0.87f_{yv})} \quad \text{.....(equation 10a)}$$

where,

x_1 is the smaller centre line dimension of the stirrups;

y_1 is the larger centre line dimension of the stirrups;

and A_{sL} satisfies equation 11 with the value of A_{st} calculated as in equation 10(a).

(c) **T,L & I –sections**:- such section shall be divided into component rectangles for purpose of torsional design. This shall be done in such a way as to maximise function $\Sigma\,(h_{max}h^3_{min})$, where h_{max} and h_{min} are the larger and smaller dimensions of each components rectangle. Each rectangle shall then be considered subject to a torque :

$$\frac{T(h_{max} \times h^3_{min})}{\sum(h_{max} \times h^3_{min})}$$

Reinforcement shall be so detailed as to tie the individual rectangles together. Where the torsional shear stress in a minor rectangle is less than v_{tmin} no torsion reinforcement need be provided in that rectangle.

15.4.4.5 Detailing – Care shall be taken in detailing to prevent the diagonal compressive forces in adjacent faces of a beam sapling the section corner. The closed stirrups shall be detailed to have minimum cover, and a pitch less than the smallest of $(x_1+y_1)/4$, 16x longitudinal corner bar diameters or 300mm. The longitudinal reinforcement shall be positioned uniformly and such that there is a bar at each corner of the stirrups. The diameters of the corner bars shall be not less than the diameters of the stirrups.

In detailing the longitudinal reinforcement to cater for torsional stresses account may be taken of those areas of the cross section subjected to simultaneous flexural compressive stresses and a lesser amount of reinforcement provided. The reduction in the amount of reinforcement in the compressive zone may be taken as

$$\text{Reduction of Steel area} = \frac{f_{cav}(\text{Area of section subject to flexural compression})}{0.87\, f_{yL}}$$

where,

f_{cav} is the average compressive stress in the flexural compressive zone.

In the case of beams, the depth of the compressive zone used to calculate the area of section subject to flexural compression shall be taken as twice the cover to the closed stirrups.

The area of either the stirrups or the longitudinal reinforcement may be reduced by 20% provided that the product.

$$\frac{A_{st}}{S_v} \times \frac{A_{sL}}{S_L}$$

remains unchanged.

15.4.5 Longitudinal Shear- For flanged beams where shear reinforcement is required to resist vertical shear the longitudinal shear resistance of the flange and of the flange web junction shall be checked in accordance with 17.4.2.3.

15.4.6 Deflection in Beams- Deflection may be calculated in accordance with clause 10.

15.4.7 Crack Control in Beams- Flexural cracking beams shall be controlled by checking crack widths in accordance with 15.9.8.2.

15.5 Slabs:

15.5.1 Moments and Shear Forces in Slabs- Moments and shear forces in slab bridges and in the top slabs of beam and slab, voided slab and box beam bridges may be obtained from a general elastic analysis or such particular elastic analysis as those due to Westergard or Pucher; alternatively, Johansen's yield line method may be used to obtain required ultimate moments of resistance subject to 13.1.3.3. The effective spans shall be in accordance with 15.4.1.1.

15.5.2 Resistance Moments of Slabs- The ultimate resistance moment in a reinforcement direction may be determined by the methods given in 15.4.2. If reinforcement is being provided to resist a combination of two bending moments and a twisting moment at a point in a slab, allowance shall be made for the fact that the principal moment and reinforcement directions do not generally coincide. Allowance can be made by calculating moments of resistance in the reinforcement directions, such that adequate strength is provided in all directions.

In voided slabs, the stresses in the transverse flexural reinforcement due to transverse shear effects shall be calculated by an appropriate analysis (e.g. an analysis based on the assumption that the transverse sections acts as a Vierendeel frame).

15.5.3 Resistance to In-plane Forces –If reinforcement is to be provided to resist a combination of in-plane direct and shear forces at a point in a slab, allowance shall be made for the fact that the principal stress and reinforcement directions do not generally coincide. Such allowance can be made by calculating required forces in the reinforcement directions, such that adequate strength is provided in all directions.

15.5.4 Shear Resistance of Slabs

15.5.4.1 Shear Stress in Solid Slabs – The shear stress v, at any cross section in a solid slab, shall be calculated from :

$$v = \frac{V}{bd} \qquad \text{.....(equation 12)}$$

where,

V is the shear force due to ultimate loads;

b is the width of slab under consideration;

d is the effective depth in tension reinforcement.

15.5.4.1.1 No shear reinforcement is required when the stress, v, is less than sv_c where s has the value shown in Table 16 and v_c is obtained from Table 15.

15.5.4.1.2 The shear stress, v, in a solid slab less than 200 mm thick shall not exceed sv_c.

15.5.4.1.3 In solid slabs at least 200mm thick, when v is greater than sv_c shear reinforcement shall be provided as for a beam (see 15.4.3.2.) except that the space between stirrups may be increased to d.

15.5.4.1.4 The maximum shear stress due to ultimate loads shall not exceed the appropriate value given in 15.4.3.1. for a beam even when shear reinforcement is provided.

15.5.4.2 Shear stresses in solid slabs under concentrated loads—When considering this clause the dispersal of concentrated loads allowed in Bridge Rules shall be taken to the top surface of the concrete slab only and not through the concrete slab.

15.5.4.2.1 The critical section for calculating shear shall be taken on perimeter 1.5d from the boundary of the loaded area, as shown in Fig.6 (a) where d is the effective depth to the flexural tension reinforcement. Where concentrated loads occur on a cantilever slab or near unsupported edges, the relevant portions of the critical section shall be taken as the worst case from (a), (b) or (c) of Fig.6. For a group of concentrated loads, adjacent loaded areas shall be considered singly and in combination using the preceding recommendation.

15.5.4.2.2 No shear reinforcement is required when the ultimate shear force, V, due to concentrated loads, is less than the ultimate shear resistance of the concrete V_c, at the critical section, as given in Fig.6.

	(a)Load at middle of slab	(b)Load at edge of slab	(c)Load at corner of cantilever slab	
Critical section for calculating shear resistance Vc (Critical sections(a), (b) and (c)(i) are assumed to have squared corners for rectangular and circular loaded areas.)	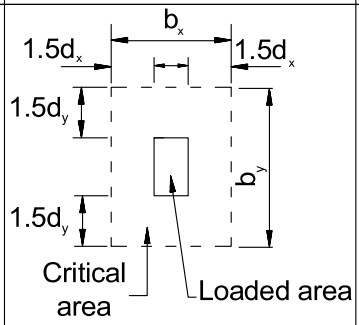	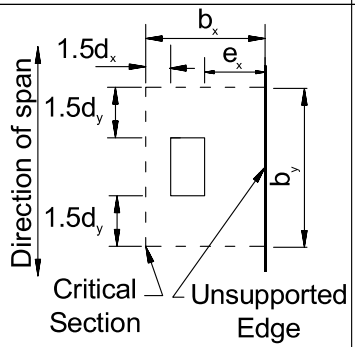	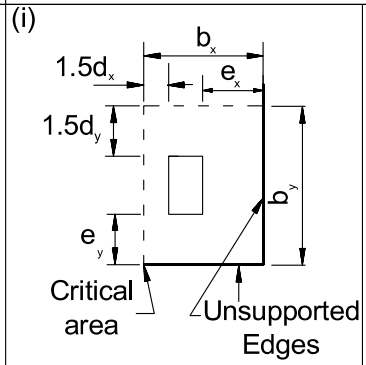	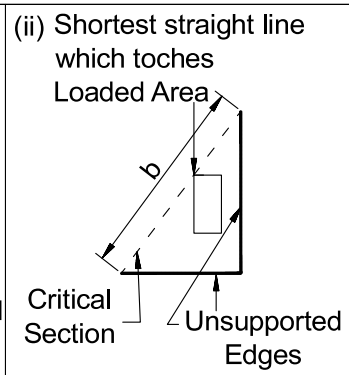
Idealized mode of faliure(only tension reinforcement shown)	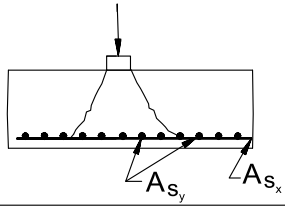	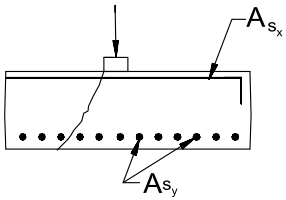	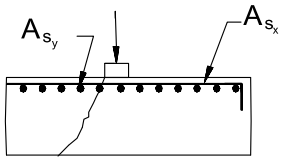	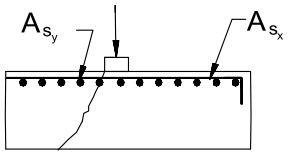
Parameters used to derive Vc from table 14 for each portion of critical section. Note, As should include only tensile reinforcement which is effectively anchord	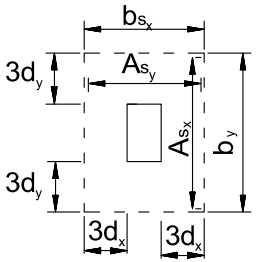	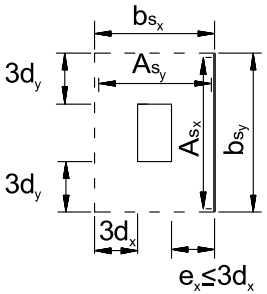	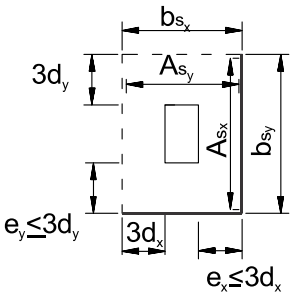	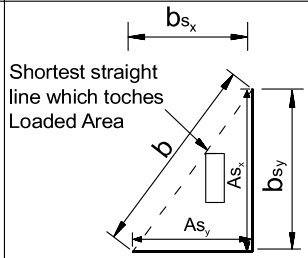 The ratio of rein.$100A_s/b_s d$ should be taken as the average of the ratios of rein. in the two directions
Shear resistance Vc at critical section	$\sum SV_c bd$ for 4 critical portions	$0.8 \sum SV_c bd$ for 3 critical portions	$0.8 \sum SV_c bd$ for 2 critical portions	$\sum SV_c b(d_x+d_y)/2$

Figure 6: Parameters for Shear in solid Slabs under Concentrated Loads

15.5.4.2.3 The overall ultimate shear resistance at the critical section shall be taken as the sum of the shear resistance of each portion of the critical section. The value of 100 A_s/(bd) to be used in Table-15 for each portion shall be derived by considering the effectively anchored flexural tensile reinforcement associated with each portion as shown in Fig.6.

15.5.4.2.4 In solid slabs at least 200mm thick, where V lies between V_c and the maximum shear resistance based on that allowed for a beam in 15.4.3.1, an area of shear reinforcement shall be provided on the critical perimeter and a similar amount on a parallel perimeter at a distance of 0.75d inside it, such that ;

$$0.4 \sum bd \leq \sum A_{sv}(0.87 f_{yv}) \geq (V - V_c) \quad \text{.....(equation 13)}$$

where,

$\sum bd$ is the area of the critical section

$\sum A_{sv}$ is the area of shear reinforcement.

f_{yv} is the characteristic strength of the shear reinforcement which shall be taken as not greater than 415N/mm^2.

The overall ultimate shear resistance shall be calculated on perimeters progressively 0.75d out from the critical perimeter and, if the resistance continues to be exceeded, further shear reinforcement shall be provided on each perimeter in accordance with equation 13, substituting the appropriate values for V and $\sum bd$. Shear reinforcement shall be considered effective only in those places where the slab depth is greater than or equal to 200mm. Shear reinforcement may be in the form of vertical or inclined stirrups anchored at both ends passing round the main reinforcement. Stirrups shall be spaced no further apart than 0.75d and, if inclined stirrups are used, the area of shear reinforcement shall be adjusted to give the equivalent shear resistance.

15.5.4.2.5 When openings in slabs and footings (see Fig.7) are located at a distance less than 6d from the edge of concentrated load or reaction, then that part of the periphery of the critical section, which is enclosed by radial projections of the openings to the centroid of the loaded area, shall be considered ineffective. Where one hole is adjacent to the column and its greatest width is less than one-quarter of the column side or one-half of the slab depth, whichever is the lesser, its presence may be ignored.

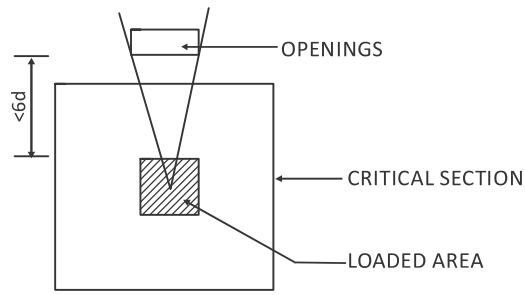

FIG 7: OPENINGS IN SLAB

15.5.4.3 Shear in Voided Slabs- The longitudinal ribs between the voids shall be designed as beams (see 15.4.3) for the shear forces in the longitudinal direction including any shear due to torsional effects.

The top and bottom flanges shall be designed as solid slabs (see 15.5.4.1), each to carry a part of the global transverse shear forces and any shear forces due to torsional effects proportional to the flange thickness. The top flange of a rectangular voided slab shall be designed to resist the punching effect due to concentrated loads (see 15.5.4.2). Where concentrated loads may punch through the slab as a whole, this shall also be checked.

15.5.5 Crack Control in Slabs- Cracking in slabs shall be checked in accordance with 15.9.8.2.

15.6 Columns

15.6.1 General

15.6.1.1 Definitions – A reinforced concrete column is a compression member whose greater lateral dimension is less than or equal to four times its lesser lateral dimensions, and in which the reinforcement is taken into account when considering its strength.

A column shall be considered as short if the ratio l_e/h in each plane of buckling is less than 12;

where:

l_e is the effective height in the plane of buckling under consideration.

h is the depth of the cross section in the plane of buckling under consideration. It shall otherwise be considered as slender.

TABLE 18: Effective Height le for columns

CASE	IDEALIZED COLUMN AND BUCKLING MODE	RESTRAINTS			EFFECTIVE HEIGHT,le
		LOCATIONS	POSITION	ROTATION	
1	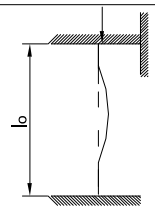	TOP	FULL	FULL*	$0.70l_o$
		BOTTOM	FULL	FULL*	
2	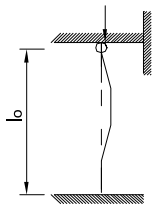	TOP	FULL	NONE	$0.85l_o$
		BOTTOM	FULL	FULL*	
3	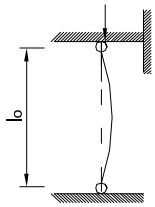	TOP	FULL	NONE	$1.0l_o$
		BOTTOM	FULL	NONE	
4	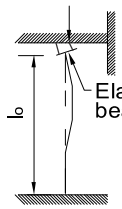	TOP	NONE*	NONE*	$1.3l_o$
		BOTTOM	FULL	FULL*	
5	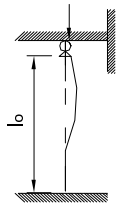	TOP	NONE	NONE	$1.4l_o$
		BOTTOM	FULL	FULL*	
6	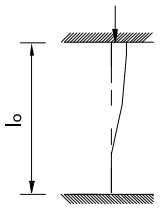	TOP	NONE	FULL*	$1.5l_o$
		BOTTOM	FULL	FULL*	
7	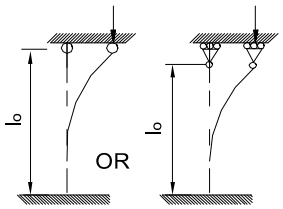	TOP	NONE	NONE	$2.3l_o$
		BOTTOM	FULL	FULL*	

* Assumed Value(15.6.12)

15.6.1.2 Effective Height of a Column- The effective height, l_e, in a given plane may be obtained from Table 18, where l_o is the clear height between end restraints.

The values given in Table 18 are based on the following assumptions:

(a) rotational restraint is at least $4(EI)_c/l_o$ for cases 1,2 and 4 to 6 and 8(EI)c/lo for case 7, (EI)c being the flexural rigidity of the column cross section;

(b) Lateral and rotational rigidity of elastomeric bearings are zero.

15.6.1.2.1 Where a more accurate evaluation of the effective height is required or where the end stiffness values are less than those values given in (a), the effective heights shall be derived from first principles. The procedure given in IS: 456 Appendix-D may be adopted.

15.6.1.2.2 The accommodation of movements and the method of articulation chosen for the bridge will influence the degree of restraint developed for columns. These factors shall be assessed as accurately as possible using engineering principles based on elastic theory and taking into account all relevant factors such as foundation flexibility, type of bearings, articulation system etc.

15.6.1.3 Slenderness Limits for Columns – In each plane of buckling, the ratio l_e/h shall not exceed 40, except that where the column is not restrained in position at one end, the ratio l_e/h shall not exceed 30; l_e and h are as defined in 15.6.1.1.

15.6.1.4 Assessment of Strength- Sub clauses 15.6.2. to 15.6.7 give methods, for assessing the strength of columns at the ultimate limit state, which are based on a number of assumptions. These methods may be used provided the assumptions are realised for the case being considered and the effective height is determined accurately. In addition, for columns subject to applied bending moments the serviceability limit state for cracking given in 10.2.1(a) shall be met.

15.6.2 Moments and Forces in Columns – The moments, shear forces and axial forces in a column shall be determined in accordance with 13.1 except that if the column is slender the moments induced by deflection shall be considered. An allowance for these additional moments is made in the design recommendations for slender columns, which follow, and the bases or other members connected to the ends of such columns shall also be designed to resist these additional moments.

In columns with end moments it is generally necessary to consider the maximum and minimum ratios of moment to axial load in designing reinforcement areas and concrete sections.

15.6.3 Short Columns Subject to Axial Load and Bending about the Minor Axis.

15.6.3.1 General – A short column shall be designed for the ultimate limit state in accordance with the following recommendations provided that the moment at any cross section has been increased by that moment produced by considering the ultimate axial load as acting at an eccentricity equal to 0.05 times the overall depth of the cross section in the plane of bending, but not more than 20mm. This is a nominal allowance for eccentricity due to construction tolerances.

15.6.3.2 Analysis of Sections – When analysing a column cross-section to determine its ultimate resistance to moment and axial load, the following assumptions should be made:

(a) The strain distribution in the concrete in compression and the compressive and tensile strains in the reinforcement are derived from the assumption that plane sections remain plane.

(b) The stresses in the concrete in compression are either derived from the stress-strain curve in Fig.4A with Y_m = 1.50, or taken as equal to 0.4 f_{ck}

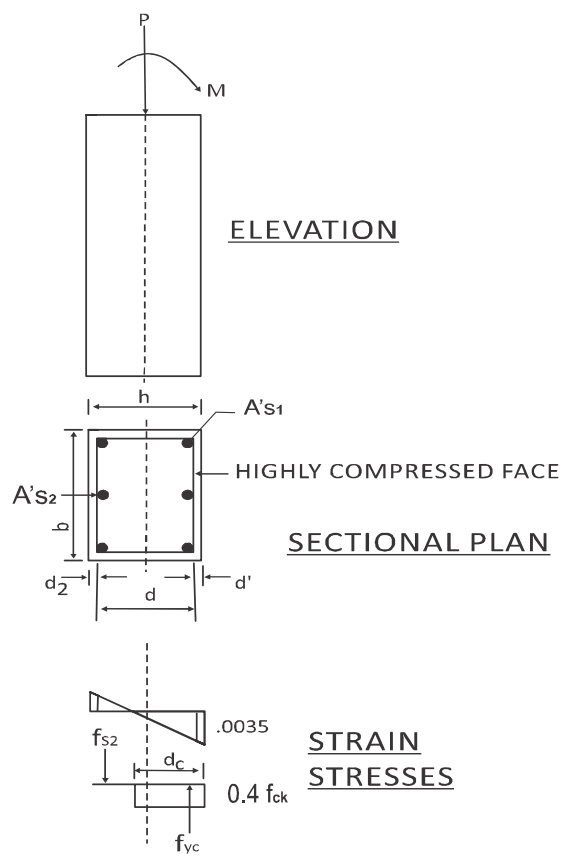

FIG 8: REINFORCED COLUMN

over the whole compression zone where this is rectangular or circular. In both cases, the concrete strain at the outermost compression fibre at failure is taken as 0.0035.

(c) The tensile strength of the concrete is ignored.

(d) The stresses in the reinforcement are derived from the stress-strain curves in Fig.4B with Y_m=1.15.

15.6.3.2.1 For rectangular columns the following design methods, based on the preceding assumptions, may be used. For other column shapes, design methods shall be derived from first principles using the preceding assumption.

15.6.3.3. Design Formulae for Rectangular Columns- The following formulae (based on a concrete stress of $0.4f_{ck}$ over the whole compression zone and the assumptions in 15.6.3.2) may be used for the design of rectangular column having longitudinal reinforcement in the two faces parallel to the axis of bending whether that reinforcement is symmetrical or not. Both the ultimate axial load, P, and the ultimate moment, M, should not exceed the values of P_u and M_u given by equations 14 and 15 for the appropriate value of d_c.

$$P_u = 0.4f_{ck}bd_c+f_{yc}A'_{s1}+f_{s2}A'_{s2} \quad \text{...(equation14)}$$

$$M_u=0.2f_{ck}bd_c(h-d_c)+f_{yc}A'_{s1}.(h/2-d') -f_{s2}A'_{s2}(h/2-d_2) \quad \text{.....(equation 15)}$$

where,

P is the ultimate axial load applied on the section considered.

M is the moment applied about the axis considered due to ultimate loads including the nominal allowance for construction tolerances (see 15.6.3.1)

P_u,M_u are the ultimate axial load and bending capacities of the section for the particular value of d_c assumed.

f_{ck} is the characteristic cube strength of the concrete.

b is the breadth of the section.

d_c is the depth of concrete in compression assumed subject to a minimum value of 2d'

f_{yc} is the design compressive strength of the reinforcement (in N/mm^2) taken as:

$$f_y / \left(Y_m + \frac{f_y}{2000} \right)$$

A'_{s1} is the area of compression reinforcement in the more highly compressed face.

f_{s2} is the stress in the reinforcement in the other face, derived from Fig.8 and taken as negative if tensile;

A'_{s2} is the area of reinforcement in the other face which may be considered as being'

(1) in compression

(2) inactive or

(3) in tension

as the resultant eccentricity of load increased and dc decreases from h to 2 d'

h is the overall depth of the section in the plane of bending

d' is the depth from the surface to the reinforcement in the more highly compressed face;

d_2 is the depth from the surface to the reinforcement in the other face.

15.6.3.4 Simplified Design Formulae for Rectangular Columns -The following simplified formulae may be used, as appropriate, for the design of a rectangular column having longitudinal reinforcement in the two faces parallel to the axis of bending, whether that reinforcement is symmetrical or not;

(a) Where the resultant eccentricity, e=M/P, does not exceed (h/2-d') and where the ultimate axial load, P, does not exceed $0.45f_{ck}b(h-2e)$, only nominal reinforcement is required (see 15.9.4.1 for minimum provision of longitudinal reinforcement), where M, P, h,d',f_{ck} and b are as defined in 15.6.3.3.

(b) Where the resultant eccentricity is not less than $(h/2-d_2)$ the axial load may be ignored and the column section designed to resist an increased moment

$$Ma = M + P(h/2-d_2)$$

Where M, P, h and d_2 are as defined in 15.6.3.3. The area of tension reinforcement necessary to provide resistance to this increased moment may be reduced by the amount $P/(0.87f_y)$.

15.6.4 Short Columns Subject to Axial Load and Either Bending About the Major Axis or Biaxial Bending- The moment about each axis due to ultimate loads shall be increased by that moment produced by considering the ultimate axial load as acting at an eccentricity equal to 0.03 times the overall depth of the cross section in the appropriate plane of bending, but not more than 20mm. This is a nominal allowance for eccentricity due to construction tolerances.

For square, rectangular and circular columns having a symmetrical arrangement of reinforcement about each axis, the section may be analysed for axial load and bending about each axis in accordance with any one of the methods of design given in 15.6.3.2 or 15.6.3.3. such that:

$$(M_x/M_{ux})^{\propto n} + (M_y/M_{uy})^{\propto n} \leq 1.0 \quad \text{....(equation 16)}$$

where,

M_x and M_y are the moments about the major x-x axis and minor y-y axis respectively due to ultimate loads, including the nominal allowance for construction tolerances given in the preceding paragraph;

M_{ux} is the ultimate moment capacity about the major x-x axis assuming an ultimate axial load capacity, Pu, not less than the value of ultimate axial load P;

M_{uy} is the ultimate moment capacity about the major y-y axis assuming an ultimate axial load capacity, P_u, not less than the value of ultimate axial load P;

$\propto_n$ is related to P/P_{uz} as given in Table 19, where P_{uz} is axial loading capacity of a column ignoring all bending, taken as:

$$P_{uz} = 0.45f_{ck}A_c + f_{yc}A_{sc} \quad \text{.....(equation 17)}$$

where,

f_{ck} and f_{yc} are as defined in 15.6.3;

A_c is the area of concrete and;

A_{sc} is the area of longitudinal reinforcement..

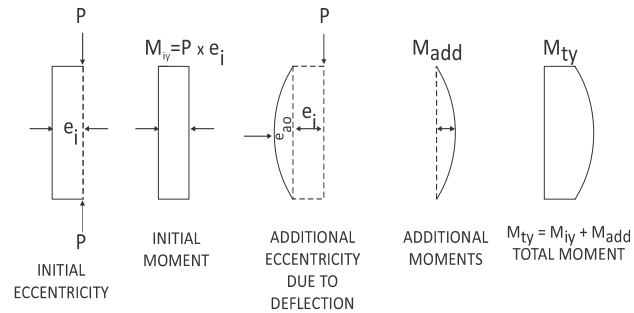

Figure 9: Additional Moments inSlender Column

TABLE 19: RELATIONSHIP OF P/P_{uz} TO $\propto_n$
(Clause 15.6.4)

P/P_{uz}	≤ 0.2	0.4	0.6	> 0.8
$\propto_n$	1.00	1.33	1.67	2.00

For other column sections, design shall be in accordance with 15.6.3.2.

15.6.5 Slender Columns

15.6.5.1 General - A cross section of a slender column may be designed by the methods given for a short column (see 15.6.3 and 15.6.4) but, in the design, account shall be taken of the additional moments induced in the column by its deflection. For slender columns of constant rectangular or circular cross section having a symmetrical arrangement of reinforcement, the column shall be designed to resist the ultimate axial load, P, together with the moments M_{tx} and M_{ty} derived in accordance with 15.6.5.4.Alternatively, the simplified formulae given in 15.6.5.2 and 15.6.5.3 may be used where appropriate; in this case the moment due to ultimate loads need not be increased by the nominal allowance for construction tolerances given in 15.6.3.1. It will be sufficient to limit the minimum value of moment to not less than the nominal allowance given 15.6.3.1.

15.6.5.2 Slender Columns Bent About A Minor Axis – A slender column of constant cross-section bent about the minor y-y axis shall be designed for its ultimate axial load,

P together with the moment M_{ty} given by :

$$M_{ty} = M_{iy} + \frac{Ph_x}{1750}(l_e/h_x)^2\left(1 - \frac{0.0035\, l_e}{h_x}\right)$$

…..(equation 18)

where,

M_{iy} is the initial moment due to ultimate loads, but not less than that corresponding to the nominal allowance for construction tolerances as given in 15.6.3.1 ;

h_x is the overall depth of the cross section in the plane of bending M_{iy} ;

l_e is the effective height either in the plane of bending or in the plane at right angles, whichever is greater.

For a column fixed in position at both ends where no transverse loads occur in its height the value of M_{iy} may be reduced to :

$$M_{iy} = 0.4M_1 + 0.6M_2 \quad \text{…(equation 19)}$$

where,

M_1 is the smaller initial end moment due to ultimate loads (assumed negative if the column is bent in double curvature) ;

M_2 is the larger initial end moment due to ultimate loads (assumed positive).

In no case, however, shall M_{iy} be taken as less than 0.4 M_2 or such that M_{ty} is less than M_2.

15.6.5.3 Slender Columns Bent About a Major Axis - When the overall depth of its cross section, h_y, is less than three times the width, h_x, a slender column bent about the major x-x axis shall be designed for its ultimate axial load P, together with the moment M_{tx} given by :

$$M_{tx} = M_{ix} + \frac{Ph_y}{1750}(l_e / h_x)^2\left(1 - \frac{0.0035 l_e}{h_x}\right)$$

……. (equation 20)

where l_e & h_x are defined in 15.6.5.2 :

M_{ix} is the initial moment due to ultimate loads, but not less than that corresponding to the nominal allowance for construction tolerances as given in 15.6.3.1 ;

h_y is the overall depth of the cross section in the plane of bending M_{ix}.

Where h_y is equal to or greater than three times, h_x, the column shall be considered as biaxially loaded with a nominal initial moment about the minor axis.

15.6.5.4 Slender Columns Bent About Both Axis - A slender column bent about both axis shall be designed for its ultimate axial load, P, together with the moments, M_{tx} about its major axis and M_{ty} about its minor axis, given by :

$$M_{tx} = M_{ix} + \frac{Ph_y}{1750}(l_{ex}/h_y)^2\left(1 - \frac{0.0035 l_{ex}}{h_y}\right)$$

……(equation 21)

$$M_{ty} = M_{iy} + \frac{Ph_x}{1750}(l_{ey}/h_x)^2\left(1 - \frac{0.0035 l_{ey}}{h_x}\right)$$

……(equation 22)

where,

h_x and h_y are as defined in 15.6.5.2 and 15.6 respectively:

M_{ix} is the initial moment due to ultimate loads about the x-x axis, including the nominal allowance for construction tolerance (see 15.6.4.):

M_{iy} is the initial moment due to ultimate loads about the y-y axis, including the nominal allowance for construction tolerance (see 15.6.4);

l_{ex} is the effective height in respect of bending about the major axis;

l_{ey} is the effective height in respect of bending about the minor axis;

15.6.6 Shear Resistance of Columns- A column subject to unaxial shear due to ultimate loads shall be designed in accordance with 15.4.3 except that the ultimate shear stress, sv_c obtained from Table 15 and Table 16 may be multiplied by:

$$1 + \frac{0.05P}{A_c}$$

where,

P is the ultimate axial load(in Newtons);

A_c is the area of the entire concrete section (in mm^2).

A column subject to biaxial shear due to ultimate loads shall be designed such that:

$$V_x/V_{ux} + V_y/V_{uy} < 1.0$$

where,

V_x and V_y are the applied shears due to ultimate loads for the x-x axis and y-y axis respectively.

V_{ux} and V_{uy} are the corresponding ultimate shear capacities of the concrete and stirrup reinforcement for the x-x axis and y-y axis respectively derived in accordance with this clause.

15.6.7. Crack control in columns- A column subjected to bending shall be considered as a beam for the purpose of crack control (see 15.9.8.2)

15.7 Reinforced Concrete Walls

15.7.1 General

15.7.1.1 Definition- A reinforced wall is a vertical load-bearing concrete member whose greater lateral dimension is more than four times its lesser lateral dimensions, and in which the reinforcement is taken into account when considering its strength.

Retaining walls, wing walls, abutments, piers and other similar elements subjected principally to bending moments, and where the ultimate axial load is less than 0.1 f_{ck} A_c shall be treated as cantilever slabs and designed in accordance with 15.5.

In other cases, this clause applies.

A reinforced wall shall be considered as either short of slender. In a similar manner to columns, a wall may be considered as short where the ratio of its effective height to its thickness does not exceed 12. It shall otherwise be considered as slender.

15.7.1.2 Limits to Slenderness – The slenderness ratio is the ratio of the effective height of the wall to its thickness. The effective height shall be obtained from Table 18. When the wall is restrained in position at both ends and the reinforcement complies with the recommendations 15.9.4, the slenderness ratio shall not exceed 40 unless more than 1% of vertical reinforcement is provided, when the slenderness ratio may be upto 45.

When the wall is not restrained in position at one end the slenderness ratio shall not exceed 30.

15.7.2 Forces and Moments in Reinforced Concrete walls- Forces and moments shall be calculated in accordance with 13.1 except that, if the wall is slender, the moments induced by deflection shall also be considered. The distribution of axial and horizontal forces along a wall from the loads on the super structure shall be determined by analysis and their points of application decided by the nature and location of the bearings.

For walls fixed to the deck, the moments shall similarly be determined by elastic analysis.

The moment/unit length in the direction at right angles to a wall shall be taken as not less than $0.05n_w h$, where n_w is the ultimate axial load per unit length and h is the thickness of the wall. Moments in the plane of a wall can be calculated from statics for the most severe positioning of the relevant loads.

Where the axial load is non-uniform, consideration shall be given to deep beam effects and the distribution of axial loads per unit length of wall.

It will generally be necessary to consider the maximum and minimum ratios of moment to axial load in designing reinforcement areas and concrete sections.

15.7.3 Short Reinforced Walls Resisting Moments and Axial Forces – The cross section of various portions of the wall shall be designed to resist the appropriate ultimate axial load and the transverse moment per unit length calculated in accordance with 15.7.2. The assumption made when analysing beam sections (see 15.4.2) apply and also when the wall is subject to significant bending only in the plane of the wall.

When the wall is subjected to significant bending both in the plane of the wall and at right angles to it, consideration shall be given first to bending in the plane of the wall in order to establish a distribution of tension and compression along the length of the wall. The resulting tension and compression shall then be combined with the compression due to the ultimate axial load to determine the combined axial load per unit length of wall. This may be done by an elastic analysis assuming a linear distribution along the wall.

The bending moment at right- angles to the wall shall then be considered and the section checked for this moment and the resulting compression or tension per unit length at various points along the wall length, using the assumptions of 15.4.2.

15.7.4 Slender Reinforced Walls- The distribution of axial load along a slender reinforced wall shall be determined as for a short wall. The critical portion of wall shall then be considered as a slender column of unit width and designed as such in accordance with 15.6.5.

15.7.5 Shear Resistance of Reinforced Walls – A wall subject to uniaxial shear due to ultimate loads shall be designed in accordance with 15.5.4.1 except that the ultimate shear stress, sv_c, obtained from Table 15 and Table 16 may be multiplied by

$$1+\frac{0.05P}{A_c}$$

where,

P is the ultimate axial load (in Newtons)

A_c is the area of entire concrete section (in mm^2)

A wall subject to biaxial shear due to ultimate loads shall be designed such that: $\frac{V_x}{V_{ux}} + \frac{V_y}{V_{uy}} < 1.0$

where,

V_x and V_y are the applied shears due to ultimate loads for the x-x axis and y-y axis respectively.

V_{ux} and V_{uy} are the corresponding ultimate shear capacities of the concrete and stirrup/ link reinforcement for the x-x axis and y-y axis respectively, derived in accordance with this clause.

15.7.6 Deflection of Reinforced Walls –The deflection of a reinforced concrete wall will be within acceptable limits if the recommendations given in 15.7.1 to 15.7.5 have been followed.

15.7.7 Crack Control in Reinforced Walls – Where walls are subject to bending, design crack widths shall be calculated in accordance with 15.9.8.2.

15.8 Footings

15.8.1 General - Where pockets are left for precast members allowance shall be made, when computing the flexural and shear strength of base section, for the effects of these pockets unless they are to be subsequently grouted up using a cement mortar of compressive strength not less than that of the concrete in the base.

15.8.2 Moments and Forces in Footing

Except where the reactions to the applied loads and moments are derived by more accurate methods, e.g. an elastic analysis of a pile group or the application of established principles of soil mechanics, the following assumptions should be made.

(a) Where the footing is axially loaded, the reactions to ultimate loads are uniformly distributed per unit area or per pile ;

(b) Where the footing is eccentrically loaded, the reactions vary linearly across the footing. For columns and walls restrained in direction at the base, the moment

transferred to the footing shall be obtained from 15.6.

The critical section in design of an isolated footing may be taken as the face of the column or wall.

The footing moment at any vertical section passing completely across a footing shall be taken as that due to all external ultimate loads and reactions on one side of that section. No redistribution of moments shall be made.

15.8.3 Design of Footings.

15.8.3.1 Resistance to Bending - Footings shall be designed as 'beam-and-slab' or 'flat-slab' as appropriate. Beam-and-slab footing shall be designed in accordance with 15.4.

Flat-slab sections shall be designed to resist the total moments and shears at the sections considered.

Where the width of the section considered is less than or equal to 1.5 (b_{col} + 3d), where b_{col} is the width of the column and d is the effective depth, to the tension reinforcement, of the footing, reinforcement shall be distributed evenly across the width of the section considered. For greater widths, two-thirds of the area of reinforcement shall be concentrated on a width of (b_{col} + 3d) centered on the column.

Pile caps may be designed either by bending theory or by truss analogy taking apex of the truss at the centre of the loaded area and the corners of the base of the truss at the intersections of the centre lines of the piles with the tensile reinforcement.

In pile caps designed as beams the reinforcement shall be uniformly distributed across any given section. In pile caps designed by truss analogy 80% of the reinforcement shall be concentrated in strips linking the pile heads and the remainder uniformly distributed throughout the pile cap.

15.8.3.2 Shear –The design shear is the algebraic sum of all ultimate vertical loads acting on one side of or outside the periphery of the critical section. The shear strength of flat-slab footing in the vicinity of concentrated loads is governed by the more severe of the following two conditions.

(a) Shear along a vertical section extending across the full width of the footing, at a distance equal to the effective depth from the face of the loaded area. The recommendations of 15.5.4.1 apply.

(b) Punching shear around the loaded area, where the recommendations of 15.5.4.2 apply.

The shear strength of pile caps is governed by the more severe of the following two conditions:

(1) Shear along any vertical section extending across the full width of the cap. The recommendations of 15.5.4.1 apply except that over portions of the section where the flexural reinforcement is fully anchored by passing across the head of a pile, the allowable ultimate shear stress may be increased to $(2d/a_v)sv_c$

where,

a_v is the distance between the face of the column or wall and the critical section;

d is the effective depth, to tension reinforcement, of the section.

where a_v is taken to be the distance between the face of column or wall and the nearer edge of the piles it shall be increased by 20% of the pile diameter.

In applying the recommendations of 15.5.4.1 the allowable ultimate shear stress shall be taken as the average over the whole section.

(2) Punching shear around loaded areas, where the recommendations of 15.5.4.2 apply.

15.8.3.3 Bond and Anchorage – The recommendations of 15.9.6 apply to reinforcement in footings. The critical sections for local bond are:

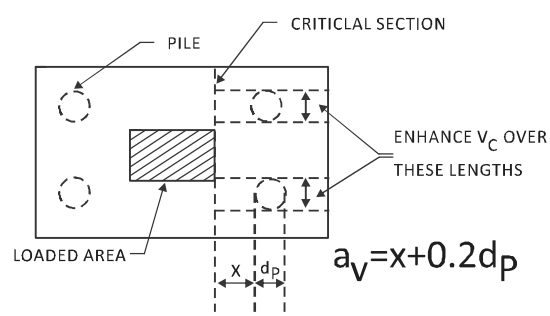

Figure 10

(a) the critical sections described in 15.9.6.1;

(b) sections at which the depth changes or any reinforcement stops;

(c) in the vicinity of piles, where all the bending reinforcement required to resist the pile load shall be continued to the pile center line and provided with an anchorage beyond the center line of 20 bar diameters.

15.8.4 Deflection of Footings - The deflection of footings need not be considered.

15.8.5 Crack Control in Footings – The recommendations of 15.9.8.2 apply as appropriate depending on the type of footing and treatment of design (see 15.8.3.1).

15.9 Considerations Affecting Design Details

15.9.1.1 Size of Members- The ease of placement of concrete and vibration should be considered while deciding the sizes of members.

15.9.1.2 Accuracy of positions of Reinforcement – In all normal cases the design may be based on the assumption that the reinforcement is in its nominal position (Refer 7.1.2). However, when reinforcement is located in relation to more than one face of a member (e.g. a stirrup in a beam in which the nominal cover for all sides is given) the actual concrete cover on one side may be greater and can be derived from a consideration of:

(a) dimensions and spacing of cover blocks, spacers and/or chairs (including the compressibility of these items and the surfaces they bear on) ;

(b) stiffness, straightness, and accuracy of cutting, bending and fixing of bars or reinforcement cage ;

(c) accuracy of formwork both in dimension and plane (this includes permanent forms such as blinding or brickwork) ;

(d) the size of the structural part and the relative size of bars of reinforcement cage.

15.9.1.2.1 In certain cases where bars or reinforcement cages are positioned accurately on one face of a structural member, this may affect the position of highly stressed reinforcement at the opposite face of the member. The consequent possible reduction in effective depth to this reinforcement may exceed the percentage allowed for in the values of the partial safety factors. In the design of a particularly critical member, therefore, appropriate adjustment to the effective depth assumed may be necessary.

15.9.1.3 Construction joints - The exact location and details of construction joints, if any, shall be indicated in drawing. Construction joints shall be at right angles to the direction of the member and shall take due account of the shear and other stresses. If special preparation of the joint faces is required it shall be specified (also see 8.5).

15.9.1.4 Movement joints - The location of all movement joints shall be clearly indicated on the drawings both for the individual members and for the structures as a whole. In general, movement joints in the structure shall pass through the whole structure in one plane. Requirements for the design of joints shall be ascertained from the engineer.

15.9.2 Clear Cover to Reinforcement

15.9.2.1 "Clear cover" is the least distance from outer most surface of steel or binding wire or its end to the face of the concrete.

15.9.2.2 Clear cover is the dimension used in design and indicated on the drawings. The clear cover shall not be less than the size of the bar or maximum aggregate size plus 5mm ; in the case of a bundle of bars (see.15.9.8.1), it shall be equal to or greater than the size of a single bar of equivalent area plus 5mm.

From durability consideration, minimum clear cover shall be as under :

Type of structure	Extreme Environ-ment	Severe environ-ment	Moderate Environment
Slab	50	35	25
Beam/ Girder	60	50	35
Column	75	75	50
Well, pile & footing	75	75	50

15.9.2.3 Diameter of reinforcing bar and maximum size of aggregate shall be decided based on 15.9.2.2.

15.9.2.4 The clear cover shall not exceed 75mm in any type of structure.

15.9.3 Reinforcement: General Considerations

15.9.3.1 General – Reinforcing bars of same type and grade shall be used as main reinforcement in a structural member. However, simultaneous use of two different types or grades of steel for main and secondary reinforcement respectively is permissible.

15.9.3.1.1 The recommendations for detailing for earthquake-resistant construction given in IS: 4326 shall be taken into consideration, where applicable.

15.9.3.2 Groups of Bars – Subject to the reductions in bond stress, bars may be arranged as pairs in contact or in groups of three or four bars bundled in contact. Bundled bars shall be tied together to ensure the bars remaining together. Bars larger than 32 mm diameter shall not be bundled, except in columns. Bars shall not be used in a member without stirrups. Bars in a bundle should terminate at different parts spaced at least 40 times the bars size apart except for bundles stopping at support.

15.9.3.2.1 Bundles shall not be used in a member without stirrups.

15.9.3.3 Bar schedule dimension - The dimensions of bars showed on the schedule shall be the nominal dimensions in accordance with the drawings.

15.9.4. Minimum Areas of Reinforcement in Members

15.9.4.1 Minimum area of main reinforcement - The area of tension reinforcement in a beam or slab shall be not less than 0.2% of $b_a d$ when using Grade Fe 415 reinforcement, or 0.35% of $b_a d$ when Grade Fe 250 reinforcement is used,

where,

b_a is the breadth of section, or average breadth excluding the compression flange for non-rectangular sections ;

d is the effective depth to tension reinforcement.

For a box, T or I section b_{a-} shall be taken as the average breadth of the concrete below the upper flange.

The minimum number of longitudinal bars provided in a column shall be four in rectangular columns and six in circular columns and their size shall not be less than 12mm. In a helically reinforced column, the longitudinal bars shall be in contact with the helical reinforcement and equidistant around its inner circumference. Spacing of longitudinal bars measured along the periphery of the columns shall not exceed 300mm. The total cross sectional area of these bars shall not be less than 1 % of the cross sections of the column or $0.15P/f_y$, whichever is the lesser, where P is the ultimate axial load and f_y is the characteristic strength of the reinforcement.

A wall cannot be considered as a reinforced concrete wall unless the percentage of vertical reinforcement provided is at least 0.4%. This vertical reinforcement may be in one or two layers.

15.9.4.2 Minimum area of secondary reinforcement - In the predominantly tensile area of a solid slab or wall the minimum area of secondary reinforcement shall be not less than 0.12% of $b_t d$ when using Grade Fe 415 reinforcement, or 0.15% of $b_t d$ when Grade Fe 250 reinforcement is used. In a solid slab or wall where the main reinforcement is used to resist compression, the area of secondary reinforcement provided shall be at least 0.12% of $b_t d$ in the case of Grade Fe 415 reinforcement and 0.15% of $b_t d$ in the case of Grade Fe 250 reinforcement. The diameter shall be not less than one quarter of the size of the vertical bars with horizontal spacing not exceeding 300 mm.

In beams where the depth of the side face exceeds 600 mm, longitudinal reinforcement shall be provided having an area of atleast 0.05% of $b_t d$ on each face with a spacing not exceeding 300 mm.

where,

b_t is the breadth of the section ;

d is the effective depth to tension reinforcement.

In a voided slab the amount of transverse reinforcement shall exceed the lesser of the following:

(a) In the bottom, or predominantly tensile, flange either 1500 mm^2/m or 1% of the minimum flange section;

(b) In the top, or predominantly compressive, flange either 1000 mm^2/m or 0.7% of the minimum flange section.

Additional reinforcement may be required in beams, slabs and walls to control early shrinkage and thermal cracking (see also 15.9.9).

15.9.4.3 Minimum area of links – When, in a beam or column, part or all of the main reinforcement is required to resist compression, links or ties at least one quarter the size of the largest compression bar shall be provided at a maximum spacing of 12 times the size of the smallest compression bar. Links shall be so arranged that every corner and alternate bar or group in an outer layer of reinforcement is supported by a link passing round the bar and having an included angle of not more than 135°. All other bars or groups within a compression zone shall be within 150 mm of a restrained bar. For circular columns, where the longitudinal reinforcement is located round the periphery of a circle, adequate lateral support is provided by a circular tie passing round the bars or groups.

When the designed percentage of reinforcement in the compression face of a wall or slab exceeds 1%, links at least 6 mm or one quarter of the size of the largest compression bar, whichever is the greater, shall be provided through the thickness of the member. The spacing of these links shall not exceed twice the member thickness in either of the two principal direction of the member and be not greater than 16 times the bar size in the direction of the compression force.

In all beams shear reinforcement shall be provided throughout the span to meet the recommendations given in 15.4.3.

The spacing of stirrups shall not exceed 0.75 times the effective depth of the beam, nor shall the lateral spacing of the individual legs of the stirrups exceed this figure.

Stirrups shall enclose all tension reinforcement. Also, the spacing of stirrups shall be restricted to 450 mm.

15.9.5 Maximum areas of reinforcement in Members.

15.9.5.1 In a beam or slab , neither the area of tension reinforcement nor the area of compression reinforcement shall exceed 4% of the gross cross-sectional area of the concrete.

15.9.5.2 In a column, the percentage of longitudinal reinforcement shall not exceed 6 in vertically cast columns or 8 in horizontally cast columns, except that at laps percentage may be 8 & 10 respectively.

15.9.5.3 In a wall, the area of vertical reinforcement shall not exceed 4% of the gross cross-sectional area of the concrete.

15.9.6 Bond Anchorage and Bearing.

15.9.6.1 Local Bond - To prevent local bond failure caused by large changes in tension over short lengths of reinforcement, the local bond stress f_{bs} obtained from equation 23 shall not exceed the appropriate value obtained from Table 20.

TABLE 20: ULTIMATE LOCAL BOND STRESSES (Clause 15.9.6.1)

BAR TYPE	CONCRETE GRADE			
	M20 N/mm^2	M 25 N/mm^2	M30 N/mm^2	M 40 or more N/mm^2
Plain bars	1.7	2.0	2.2	2.7

NOTE: For deformed bars, the above values shall be increased by 40%.

$$f_{bs} = \frac{V \pm (M/d)\tan\phi_s}{\sum U_s d} \quad \text{....(equation 23)}$$

which becomes

$$f_{bs} = \frac{V}{\sum U_s d}$$

when the bars are parallel to the compression face, where

V is the shear force due to ultimate loads;

ΣU_s is the sum of the effective perimeters of the tension reinforcement (see 15.9.6.3) ;

d is the effective depth to tension reinforcement ;

M is the moment at the section due to ultimate loads ;

ϕ_s is the angle between the compression face of the section and the tension reinforcement.

In equation 23, the negative sign shall be used when the moment is increasing numerically in the same direction as the effective depth of the section.

Critical sections for local bond occur at the ends of simply supported members, at points where tension bars stop and at points of contraflexure. However, points where tension bars stop and points of contraflexure need not be considered if the anchorage bond stresses in the continuing bars do not exceed 0.8 times the value in 15.9.6.2.

15.9.6.2 Anchorage bond - To prevent bond failure the tension or compression in any bar at any section due to ultimate loads shall be developed on each side of the section by an appropriate embedment length or other end anchorage. The anchorage bond stress, assumed to be constant over the effective anchorage length, taken as the force in the bar divided by the product of the effective anchorage length and the effective perimeter of the bar or group of bars (see 15.9.6.3), shall not exceed the appropriate value obtained from Table 21.

TABLE 21 : ULTIMATE ANCHORAGE BOND STRESSES (Clause 15.9.6.2, 17.2.4.2)

	M 20 N/mm^2	M 25 N/mm^2	M 30 N/mm^2	M 40 or more N/mm^2
Plain bars in tension	1.2	1.4	1.5	1.9
Plain bars in compression	1.5	1.7	1.9	2.3

Note : For deformed bars, the above values shall be increased by 40%.

15.9.6.3 Effective perimeter of a bar or group of bars - The effective perimeter of a single bar may be taken as 3.14 times its nominal size. The effective perimeter of a group of bars (see 15.9.3.2) shall be taken as the sum of the effective perimeters of the individual bars multiplied by the appropriate reduction factor given in Table 22.

TABLE 22 : REDUCTION FACTOR FOR EFFECTIVE PERIMETER OF A GROUP OF BARS (Clause 15.9.6.3)

NUMBER OF BARS IN A GROUP	REDUCTION FACTOR
2	0.8
3	0.6
4	0.4

15.9.6.4 Anchoring Shear Reinforcement

15.9.6.4.1 Anchorage of Stirrups – A stirrup may be considered to be fully anchored if it passes round another bar of at least its own size through an angle of 90° and continues beyond for a minimum length of eight times own size, or when the bar is bent through an angle of 135° and is continued beyond the end of the curve for a lengthy of 6 bars diameter, or through 180° and continues for a minimum length of four times its own size. In no case shall the radius of any bend in the stirrup be less than twice the radius of the test bend guaranteed by the manufacturer of the bar.

15.9.6.4.2 Anchorage of inclined bars – The development length shall be as for bars in tension ; this length shall

be measured as under :

(1) In tension zone, from the end of the sloping or inclined portion of the bar, and

(2) In the compression zone, from the mid depth of the beam.

15.9.6.5 Laps and Joints – Continuity of reinforcement may be achieved by a connection using any of the following jointing methods:

(a) lapping bars

(b) butt welding (see 7.1.4 and 13.4)

(c) sleeving (see 7.1.3.5)

(d) threading of bars (see 7.1.3.5)

Such connection shall occur, as far as possible, away from points of high stress and shall be staggered. It is recommended that splices in flexural members shall not be at sections when the bending moment is more than 50 percent of the moment of resistance and not more than half the bars shall be spliced at a section.

Where more than one-half of the bars are spliced at a section or where splices are made at points of maximum stress, special precautions shall be taken, such as, increasing the length of lap and/or using spirals or closely spaced stirrups around the length of the splice.

The use of the joining methods given in (c) and (d) and any other method not listed shall be verified by test evidence.

15.9.6.6 Lap Lengths

15.9.6.6.1 Lap splices shall not be used for bars larger than 32 mm. When bars are lapped, the length of the lap shall at least equal the anchorage length (derived from 15.9.6.2) required to develop the stress in the smaller of the two bars lapped. The length of the lap provided, however, shall neither be less than 25 times the smaller bar size plus 150 mm in tension reinforcement nor be less than 20 times the smaller bar size plus 150 mm in compression reinforcement.

The lap length calculated in the preceding paragraph shall be increased by a factor of 1.4 if any of the following conditions apply:

(a) the nominal cover to the lapped bars from the top of the section as intended to bed cast is less than twice the bar size ;

(b) the clear distance between the lap and another pair of lapped bars is less than 150 mm ;

(c) a corner bar is being lapped and the nominal cover to either face is less than twice the bar size.

Where conditions (a) and (b) or conditions (a) and (c) apply the lap length shall be increased by a factor of 2.0.

15.9.6.6.2 Lap splices are considered to be staggered if the centre to centre distance of the splices is not less than 1.3 times the lap length calculated as described in 15.9.6.6.1.

15.9.6.6.3 In case of bundled bars, lapped splices of bundled bars shall be made by splicing one bar at a time ; such individual splices within a bundle shall be so staggered that in any cross-section there are not more than four bars in a bundle.

15.9.6.7 Hooks and Bends - Hooks, bends and other reinforcement anchorages shall be of such form dimension and arrangement as to avoid overstressing the concrete.

The effective anchorage length of a hook or bend shall be measured from the start of the bend to a point four times the bar size beyond the end of the bend, and may be taken as the lesser of 24 times the bar size or

(a) for a hook, eight times the internal radius of the hook ;

(b) for a 90° bend, four times the internal radius of the bend.

In no case shall the radius of any bend be less than twice the radius of the test bend guaranteed by the manufacturer of the bar and, in addition, it shall be sufficient to ensure that the bearing stress at the mid-point of the curve does not exceed the value given in 15.9.6.8.

When a hooked bar is used at a support, the beginning of the hook shall be atleast four times the bar size inside the face of the support.

15.9.6.8 Bearing stress inside bends – The bearing stress inside a bend, in a bar which does not extend or is not assumed to be stressed beyond a point four times the bar size past the end of the bend, need not be checked. The bearing stress inside a bend as described in IS: 2502 need not be checked.

The bearing stress inside a bend in any other bar shall be calculated from the equation:

$$\text{Bearing stress} = \frac{F_{bt}}{r\phi}$$

F_{bt} is the tensile force due to ultimate loads in a bar or group bars ;

r is the internal radius of the bend ;

ϕ is the size of the bar or, in a bundle, the size of a bar of equivalent area.

The stress shall not exceed $1.5f_{ck} / (1+2\ \phi/a)$ where ***'a'*** for a particular bar or group of bars in contact shall be taken as the centre to centre distance between bars or groups of bars perpendicular to the plane of the bend ; for a bar or group of bars adjacent to the face of the member, ***'a'*** shall be taken as the cover plus ϕ.

15.9.6.9 If a change in direction of tension or compression reinforcement induces a resultant force acting outward tending to split the concrete, such force shall be taken up by additional links or stirrups. Bent tension bar at a re-entrant angle shall be avoided.

15.9.7 Curtailment and anchorage of reinforcement

15.9.7.1 In any member subject to bending every bar shall extend, except at end supports, beyond the point at which it is no longer needed, for a distance equal to the effective depth of the member or 12 times the size of the bar, whichever is greater. A point at which reinforcement is no longer required is where the resistance moment of the section considering only the continuing bars, is equal to the required moment.

In addition, reinforcement shall not be terminated in a tension zone unless one of the following conditions is satisfied:

(a) the bars extend an anchorage length appropriate to their design strength (0.87 fy) from the point at which they are no longer required to resist bending ; or

(b) the shear capacity at the section where the reinforcement stops is greater than twice the shear force actually present ; or

(c) the continuing bars at the section where the reinforcement stops provide double the area required to resist the moment at that section.

One or other of these conditions shall be satisfied for all arrangements of ultimate load considered.

At simply supported end of a member each tension bar shall be anchored by one of the following:

(1) an effective anchorage equivalent to 12 times the bar size beyond the centre line of the support ; no bend or hook shall begin before the centre of the support;

(2) an effective anchorage equivalent to 12 times the bar size plus d/2 from the face of the support ;where d is the effective depth to tension reinforcement of the member; no bend shall begin before d/2 from the face of the support.

15.9.7.2 Curtailment of bundled bars – Bars in a bundle shall terminate at different points spaced apart by not less than 40 times the bar diameter except for bundled bars stopping at a support.

15.9.8 Spacing of Reinforcement

15.9.8.1 Minimum distance between bars – These recommendations are not related to bar sizes but when a bar exceeds the maximum size of coarse aggregate by more than 5 mm, a spacing smaller than the bar size shall generally be avoided; if the distance under consideration is between bars of unequal diameters, the size of the larger bar shall be considered for this purpose. A pair of bars in contact or a bundle of three or four bars in contact shall be considered as a single bar of equivalent area when assessing size.

The spacing of bars shall be suitable for the proper compaction of concrete and when an internal vibrator is likely to be used sufficient space shall be left between

reinforcement to enable the vibrator to be inserted.

Minimum reinforcement spacing is best determined by experience or proper works test, but in the absence of better information, the following may be used as a guide:

(a) **Individual bars** - Except where bars form part of a pair or bundle (see (b) and (c) the clear distance between bars shall be not less than h_{agg} + 5mm, where h_{agg} is the maximum size of coarse aggregate.

Where there are two or more rows:

(1) the gaps between corresponding bars in each row shall be in line;

(2) the clear distance between rows shall be not less than h_{agg} except for precast members where it shall be not less than 0.67 h_{agg}.

(b) **Pairs of bars** - Bars may be arranged in pairs either touching or closer than in (a), in which case:

(1) the gaps between corresponding pairs in each row shall be in line and of width not less than h_{agg} + 5mm;

(2) when the bars forming the pairs are one above the other, the clear distance between rows shall be not less than h_{agg}, except for precast members where it shall be not less than 0.67 h_{agg};

(3) when the bars forming the pair are side by side, the clear distance between rows shall be not less than h_{agg} + 5mm.

(c) **Bundled Bars** - Horizontal and vertical distances between bundles shall be not less than h_{agg} + 15 mm and gaps between rows of bundles shall be vertically in line.

15.9.8.2 Maximum distance between bars in tension.

15.9.8.2.1 The maximum spacing shall not be greater than 300 mm and be such that the crack widths calculated using equations 24 & 26 as appropriate do not exceed the limits laid down in 10.2.1 under the design loadings given in 11.3.2.

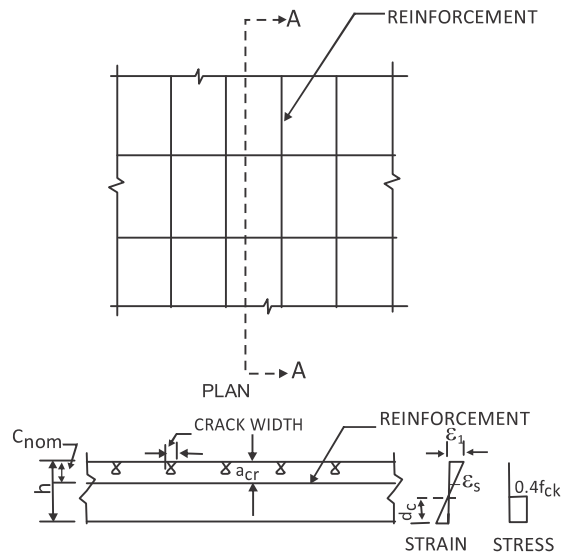

Figure 11: Sectional Elevation A-A

(a) For solid rectangular sections, stems of T beams and other solid sections shaped without re-entrant angles, the design crack widths at the surface (or, where the cover to the outermost bar is greater than C_{nom}, on a surface at a distance C_{nom} from outermost bar) shall be calculated from the following equation:

Design crack width =

$$\frac{3a_{cr}\varepsilon_m}{1+2\left(a_{cr}-c_{nom}\right)/\left(h-d_c\right)}$$

…. equation 24)

where,

a_{cr} is the distance from the point (crack) considered to the surface of the nearest longitudinal bar ;

c_{nom} is the required nominal cover to the tensile reinforcement given in 15.9.2, where the cover shown or the drawing is greater than the value given in 15.9.2, the latter value may be used;

d_c is the depth of the concrete in compression (if d_c = 0 the crack widths shall be calculated using equation 26);

h is the overall depth of the section;

ε_m is the calculated strain at the level where cracking is being considered, allowing for the stiffening effect of the concrete in the tension zone; a negative value of ε_m indicates that the section is uncracked. The value of ε_m shall be obtained from the equation:

$$\varepsilon_m = \varepsilon_1 - \left[\frac{3.8 b_t h(a' - d_c)}{\varepsilon_s A_s (h - d_c)}\right]\left[1 - \frac{M_q}{M_g}\right]10^{-9}.$$

…….. (equation 25)

but nor greater than ε_1 .

where,

ε_1 is the calculated strain at the level where cracking is being considered, ignoring the stiffening effect of the concrete in the tension;

b_t is the width of the section at the level of the centroid of the tension steel ;

a' is the distance from the compression face to the point at which the crack width is being calculated ;

M_g is the moment at the section considered due to permanent loads ;

M_q is the moment at the section considered due to live loads;

ε_s is the calculated strain in the tension reinforcement, ignoring the stiffening effect of the concrete in the tension zone;

A_s is the area of tension reinforcement.

Where the axis of the design moment and the direction of the tensile reinforcement resisting that moments are not normal to each other (e.g. in a skew slab), A_s shall be taken as :

$$A_s = \sum (A_t \cos^4 \propto_1)$$

where,

A_t is the area of reinforcement in a particular direction;

$\propto_1$ is the angle between the axis of the design moment and the direction of the tensile reinforcement, A_t, resisting that moment.

(b) For flanges in overall tension, including tensile zones of box beams and voided slabs, the design crack width at the surface (or at a distance C_{nom} from the outermost bar) shall be calculated from the following equation:

$$\text{Design crack width} = 3\, a_{cr}\, \varepsilon_m$$

…….(equation 26)

where,

ε_m is obtained from equation 25.

(c) Where global and local effects are calculated separately (see 13.5.3) the value of ε_m may be obtained by algebraic addition of the strains calculated separately. The design crack width shall then be calculated in accordance with (b) but may, in the case of a deck slab where a global compression is being combined with a local moment, be obtained using (a), calculating d_c on the basis of the local moment only.

(d) The spacing of transverse bars in slabs with circular voids shall not exceed twice the minimum flange thickness.

15.9.9 Shrinkage and temperature reinforcement - To prevent excessive cracking due to shrinkage and thermal movement, reinforcement shall be provided in the direction of any restraint to such movements. In the absence of any more accurate determination, the area of reinforcement, A_s, parallel to the direction of each restraint, shall be such that :

$$As \geq K_r (A_c - 0.5\, A_{cor})$$

where,

K_r is 0.005 for Grade Fe 415 reinforcement and 0.006 for Grade Fe 250 reinforcement;

A_c is the area of the gross concrete section at right angles to the direction of the restraint;

A_{cor} is the area of the core of the concrete section, A_c, i.e. that portion of the section more than 250 mm away from all concrete surfaces.

Shrinkage & temperature reinforcement shall be distributed uniformly around the perimeter of the concrete section and spaced at not more than 150 mm.

Reinforcement that is present for other purposes may be taken into account for the purpose of this clause.

15.9.10 Arrangement of reinforcement in Skew Slabs

15.9.10.1 General – In all types of skew slab for which the moments and torsions have been determined by an elastic analysis, the reinforcement or prestressing tendons shall be aligned as close as is practicable to the principal moment directions. In general, an orthogonal arrangement is recommended.

15.9.10.2 Solid Slabs – Only for combinations of large skew angle and low ratio of skew breadth to skew span is it preferable to place reinforcement in directions perpendicular and parallel to the free edges. Usually it is more efficient to place reinforcement parallel and perpendicular to the supports, preferably in combination with bends of reinforcement positioned adjacent and parallel to the free edges.

Special attention shall be given to the provision of adequate anchorage of bars meeting the free edge at an angle.

An alternative, but less efficient method, is to fan out the longitudinal steel from perpendicular to the supports to parallel to the free edge at the edge.

15.9.10.3 Voided slabs – The longitudinal steel will generally be placed parallel to the voids and it is recommended that the transverse steel be placed orthogonal to this steel.

15.9.10.4 Solid composite slabs- The longitudinal steel will generally be in the form of prestressing tendons in the precast units which are parallel to the free edges. Ideally, the transverse reinforcement shall be placed at right-angles to the free edge, since this is the most efficient arrangement; however, in practice, the transverse reinforcement may frequently have to be placed at a different angle or parallel to the supports.

15.9.11 Design of diaphragms

15.9.11.1 The thickness of diaphragms when provided for connecting two girders, shall not be less than the thickness of the web of the girder.

15.9.11.2 The reinforcement to be provided in the diaphragms shall resist a tensile force equal to 2.5% of the total compressive force carried by both the girders. This reinforcement diaphragm with additional nominal reinforcement through the entire depth of the diaphragm.

15.9.11.3 The end diaphragms, where required, shall also be strong enough to resist the load caused by jacking operations during erection and maintenance operation like replacement of bearings.

15.9.11.4 A minimum vertical clearance of 400 mm shall be provided between the top of pier/bed block and the jacking point to facilitate jacking operation.

15.10 Use of lightweight aggregates

Use of lightweight aggregates is beyond the scope of this code. Lightweight aggregates can only be used with the specific approval of the engineer for which separate specifications are to be drawn up.

16 DESIGN & DETAILING: PRESTRESSED CONCRETE

16.1 General –

16.1.1 This clause gives methods of analysis and design which will in general ensure that for prestressed concrete construction, the recommendations set out in 10.2 & 10.3 are met. Other methods may be used provided they can be shown to be satisfactory for the type of structure or member considered. In certain cases the assumptions made in this clause may be inappropriate and the engineer shall adopt a more suitable method having regard to the nature of the structure in question.

This clause does not cover prestress concrete construction using any of the following in the permanent works :

(a) unbonded tendons;

(b) external tendons (a tendon is considered external if, after stressing and incorporating in the permanent work but before protection, it is outside the concrete section);

(c) lightweight aggregate.

When analysing sections, the terms 'strength', 'resistance' and 'capacity' are used to describe the strength of the section.

16.1.2 All prestressed concrete structures shall be designed for safety, serviceability and durability requirements (structural and non-structural loads caused by environment).

16.1.3 The bridges shall be designed for the service life as given below: -

Type of structures	Design life in yrs.
Bridges in sea	50
Bridges in Coastal areas	80
Bridges in rest of India	100

16.2 Limit state design of prestressed concrete

16.2.1 Basis of Design – Clause 16 follows the limit state philosophy set out in clause 10 but, as it is not possible to assume that a particular limit state will always be the critical one, design methods are given for both the ultimate and the serviceability limit states.

In general, the design of prestressed concrete members are controlled by concrete stress limitations for serviceability load conditions, but the ultimate strength in flexure, shear and torsion shall be checked.

16.2.2 Durability - A proper drainage system shall be provided for the deck as indicated in 15.2.2.1. Guidance is given in 16.9.2 on the minimum cover to reinforcement and prestressing tendons. For other requirements like maximum water cement ratio, minimum grade of concrete, minimum cement contents, maximum crack width etc., Clause 5.4 & 10.2.1 shall be referred.

16.2.3 Loads – In clause 16, the design load (see 11.3) for the ultimate and serviceability limit states are referred to as 'ultimate loads' and 'service loads' respectively.

Consideration shall be given to the construction sequence and to the secondary effects due to prestress particularly for the serviceability limit states. For prestressed concrete members the different stages of loadings defined below shall be investigated and the various stresses to which the member is subjected shall be maintained within the permissible limits.

(a) at transfer of prestress;

(b) at handling and erection;

(c) at design load.

16.2.4 Strength of Materials

16.2.4.1 Definition of strengths – In clause 16 the design strengths of materials are expressed in all the tables and equations in terms of the characteristic strength of the material. Unless specifically stated otherwise, all equations and tables include allowances for Y_m, the partial safety factor for material strength.

16.2.4.2 Characteristic strength of concrete – The characteristic cube strengths of concrete for various grades are given in Table 2. These values given do not include any allowance for Y_m. Design shall be based on the characteristic strength, f_{ck}, except that at transfer the calculations shall be based on the cube strength at transfer.

16.2.4.3 Characteristic strength of prestressing tendons – Until the relevant Indian standards specifications for prestressing steel are modified to include the concept of characteristic strength, the characteristic strength shall be assumed as the minimum ultimate tensile stress/breaking load for the prestressing steel specified in the relevant Indian Standard Specifications.

16.2.4.3.1 The values given in relevant Indian Standard Specifications do not include any allowance for Y_m.

16.3 Structures & Structural Frames

16.3.1 Analysis of structures – Complete structures and complete structural frames may be analysed in accordance with the recommendations of 13.1 but when appropriate the methods given in 16.4 may be used for the design of individual members.

The relative stiffness of members shall generally be based on the concrete section as described in 13.1.2.1.

16.3.2 Redistribution of Moments -Redistribution of moments obtained by rigorous elastic analysis under

the ultimate limit state may be carried out provided the following conditions are met.

(a) Appropriate checks are made to ensure that adequate rotation capacity exists at sections where moments are reduced, making reference to appropriate test data.

In the absence of a special investigation, the plastic rotation capacity may be taken as the lesser of :

(1) $$0.008 + 0.035\left(0.5 - \frac{d_c}{d_e}\right)$$

or

(2) $$\frac{10}{d - d_c}$$

but not less than 0 or more than 0.015

where,

d_c is the calculated depth of concrete in compression at the ultimate limit state (in mm) ;

d_e is the effective depth for a solid slab or rectangular beam, otherwise the overall depth of the compression flange (in mm);

d is the effective depth to tension reinforcement (in mm).

(b) Proper account is taken of changes in transverse moments, transverse deflections and transverse shears consequent on redistribution of longitudinal moments by means of an appropriate non-linear analysis.

(c) Shears and reactions used in design are taken as either those calculated prior to redistribution or after redistribution, whichever is greater.

(d)The depth of the members or elements considered is less than 1200 mm.

16.4 Beams

16.4.1 General

16.4.1.1 Definitions - The definitions and limitations of the geometric properties for prestressed beams are as given for reinforced concrete beams in 15.4.1.

16.4.1.2 Slender Beams – In addition to limiting the slenderness of a beam (see 15.4.1.3) when under load in its final position, the possible instability of a prestressed beam during erection shall be considered.

16.4.1.2.1 Members may collapse by tilting about a longitudinal axis through the lifting points. This initial tilting, which may be due to imperfections in beam geometry and in locating the lifting points, could cause lateral bending moments and these, if too high, could result in lateral instability.

The problem is complex and previous experience shall be relied on in considering a particular case. The following factors may require consideration:

(a) beam geometry, i.e. type of cross section span/ breadth/ depth ratios, etc.;

(b) location of lifting points ;

(c) methods of lifting i.e. inclined or vertical slings, type of connection between the beam and the slings;

(d) tolerance in construction, e.g. maximum lateral bow.

The stress due to the combined effects of lateral bending, dead load and prestress can be assessed and, if cracking is possible, the lifting arrangements shall be changed or the beam shall be provided with adequate lateral support.

16.4.2 Serviceability Limit State : **Flexure**

16.4.2.1 Section Analysis - The following assumptions may be made when considering design loads :

(a) Plane sections remain plane.

(b) Elastic behaviour exists for the concrete upto stresses given in 16.4.2.2.

(c) In general, it may only be necessary to calculate stresses due to the load combinations given in 11.3 immediately after the transfer of prestress and after all losses of prestress have occurred; in both cases the effects of dead and imposed loads on the strain and force in the tendons may be ignored.

16.4.2.2 Concrete compressive stress limitations –

(a) **Load under serviceability limit state -** The compressive stresses in the concrete under the loads given in Clause-11 shall not exceed the values given in Table-23.

Higher stresses are permissible for prestressed members used in composite construction (see 17.4.3.2).

(b) **At transfer -** The compressive stresses in the concrete at transfer shall not exceed the values given in Table 24, where f_{ci} is the concrete strength at transfer.

TABLE-23: COMPRESSIVE STRESSES IN CONCRETE FOR SERVICEABILITY LIMIT STATES

(Clauses 16.4.2.2, 17.4.3.2)

NATURE OF LOADING	ALLOWABLE COMPRESSIVE STRESS
Design load in bending	0.4 f_{ck}
Design Load in direct compression	0.3 f_{ck}

TABLE-24: ALLOWABLE COMPRESSIVE STRESSES AT TRANSFER

(Clause 16.4.2.2)

NATURE OF STRESS DISTRIBUTION	ALLOWABLE COMPRESSIVE STRESS
Triangular or near triangular distribution of prestress	$0.5f_{ci}$ but $\leq o.4f_{ck}$
Uniform or near uniform distribution of prestress	$0.4f_{ci}$ but $\leq o.3f_{ck}$

16.4.2.3 Steel stress limitations – The stress in the prestressing tendons under the loads given in 11 need not be checked. The stress at transfer shall be checked in accordance with 16.8.1.

16.4.2.4 Cracking

(a) **Under service loads-** The recommendations of 10.2.1 are deemed to be satisfied provided that the flexural tensile stresses under the loading given in 11.3.2 do not produce any tensile stresses except as indicated in 16.4.2.4 (b).

(b) **At transfer and During Construction-** The flexural tensile stress in the concrete shall not exceed 1 N/mm^2 due solely to prestress and co-existent dead and temporary loads during erection.

16.4.3 Ultimate Limit State : Flexure

16.4.3.1 Section Analysis – When analysing a cross section to determine its ultimate strength the following assumptions shall be made :

(a) The strain distribution in the concrete in compression is derived from the assumption that plane sections remain plane.

(b) The stresses in the concrete in compression are derived either from the stress-strain curve given in Fig.4A, with Y_m = 1.5, or, in the case of rectangular sections or flanged sections with the neutral axis in the flange, the compressive stress may be taken as equal to 0.4 f_{ck} over the whole compression zone ; in both cases the strain at the outermost compression fibre is taken as 0.0035.

(c) The tensile strength of the concrete is ignored.

(d) The strain in bonded prestressing tendons and in any additional reinforcement, whether in tension or compression, are derived from the assumption that plane sections remain plane. In addition, the tendon will have an initial strain due to prestress after all losses.

(e) The stresses in bonded prestressing tendons, whether initially tensioned or untensioned, and in additional reinforcement, are derived from the appropriate stress-strain curves, with Y_m = 1.15; the stress strain curves for prestressing tendons are given in Fig.2 &3 and the stress-strain curves for reinforcement are given in Fig.4B. An empirical approach for obtaining the stress in the

tendons at failure is given in 16.4.3.2 and Table 24.

TABLE 25: CONDITIONS AT THE ULTIMATE LIMIT STATE FOR RECTANGULAR BEAMS WITH PRETENSIONED TENDONS, OR WITH POST-TENSIONED TENDONS HAVING EFFECTIVE BOND.

(Clause 16.4.3)

$\frac{f_{pu}A_{ps}}{f_{ck}bd}$	STRESS IN TENDONS AS A PROPORTION OF THE DESIGN STRENGTH, $f_{pb}/(0.87f_{pu})$		RATIO OF DEPTH OF NEUTRAL AXIS TO THAT OF THE CENTROID OF THE TENDONS IN THE TENSION ZONE, X/d	
	Pre-Ten-sioning	Post tensioning with effective bond	Pre-Ten-sioning	Post-tension-ing with effective bond
0.025	1.0	1.0	0.054	0.054
0.05	1.0	1.0	0.109	0.109
0.10	1.0	1.0	0.217	0.217
0.15	1.0	1.0	0.326	0.326
0.20	1.0	0.95	0.435	0.414*
0.25	1.0	0.90	0.542	0.480*
0.30	1.0	0.85	0.655	0.558*
0.40	0.9	0.75	0.783*	0.653*

NOTE-* The neutral axis depth in these cases is too low to provide the elongation given in 16.4.3.1. It is essential therefore that the strength provided shall exceed that strictly required by 15%.

In addition, if the ultimate moment of resistance calculated as in (a) to (e) is less than 1.15 times the required value, the section shall be proportioned such that the strain in the outermost tendon is not less than:

$$0.005 + \frac{f_{pu}}{E_s Y_m}$$

where,

f_{pu} is characteristic strength of prestressing tendon, and

E_s is the modulus of elasticity of the steel.

Where the outermost tendon, or layer of tendons, provides less than 25% of the total tendon area, this condition shall also be met at the centroid of the outermost 25% of tendon area.

16.4.3.1.1 As an alternative, the strains in the concrete and the bonded prestressing tendons and any additional reinforcement, due to the application of ultimate loads, may be calculated using the following assumptions:

(a) The strain distribution in the concrete in compression and the strains in bonded prestressing tendons and any additional reinforcement, whether in tension or compression, are derived from the assumption that plane sections remain plane. In addition, the tendons will have an initial strain due to prestress after all losses.

(b) The stresses in the concrete in compression are derived from the stress-strain curve given in Fig. 4A, with $Y_m = 1.5$.

(c) The tensile strength of the concrete is ignored.

(d) The stresses in bonded prestressing tendons, whether initially tensioned or untensioned, and in additional reinforcement are derived from the appropriate stress-strain curves with Y_m=1.15; the stress strain curve for prestressing tendons is given in Fig. 2 & 3 and the stress-strain curves for reinforcement are given in Fig.4B. In using the alternative method of analysis, the calculated strain due to the application of ultimate loads at the outermost compression fibre of the concrete shall not exceed 0.0035.

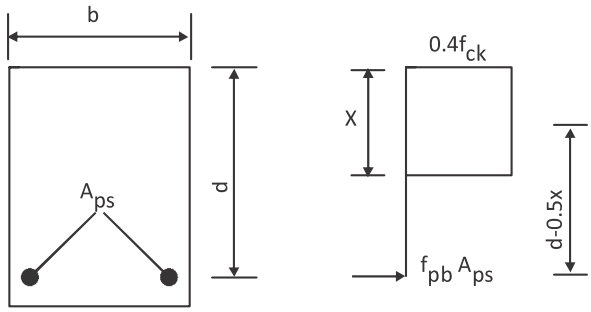

Fig12: STRESSES IN A RECTANGULAR BEAM

In addition, the section shall be proportioned such that the strain at the centroid of the outermost 25% of the cross sectional area of the tendons is not less than $0.005+f_{pu}/(E_s Y_m)$ except where the requirement for the calculated strain in the concrete, due to the application of 1.15 times the ultimate loads, can be satisfied.

16.4.3.2 Design Formula – In the absence of an analysis based on the assumptions given in 16.4.3.1, the resistance moment of a rectangular beam, or of a flanged beam in which the neutral axis lies within the flange, may be obtained from equation 27.

$$M_u = f_{pb}A_{ps}(d-0.5x) \quad \text{.....(equation 27)}$$

where,

M_u is the ultimate moment of resistance of the section;

f_{pb} is the tensile stress in the tendons at failure;

x is the neutral axis depth;

d is the effective depth to tension reinforcement;

A_{ps} is the area of the prestressing tendons in the tension zone.

Value for f_{pb} and x may be derived from Table 25 for pre-tensioned members and for post-tensioned members with effective bond between the concrete and tendons, provided that the effective prestress after all losses is not less than $0.45f_{pu}$. Prestressing tendons and additional reinforcement in the compression zone are ignored in strength calculations when using this method.

16.4.3.3 Non-rectangular Sections - Non-rectangular beams shall be analysed using the assumptions given in 16.4.3.1.

16.4.4 Shear Resistance of Beams

16.4.4.1 Calculations for shear are only required for the ultimate limit state.

16.4.4.1.1 At any section the ultimate shear resistance of the concrete alone, V_c , shall be considered for the section both uncracked (see 16.4.4.2) and cracked (see 16.4.4.3) in flexure, and if necessary shear reinforcement shall be provided (see 16.4.4.4).

16.4.4.1.2 For a cracked section the conditions of maximum shear with co-existent bending moment and maximum bending moment with co-existent shear shall both be considered.

16.4.4.1.3 Within the transmission length of pretensioned members (see 16.8.4), the shear resistance of a section shall be taken as the greater of the values calculated from:

(a) 15.4.3 except that in determining the area A_s ,the area of tendons shall be ignored: and

(b) 16.4.4.2 to 16.4.4.4 ,using the appropriate value of prestress at the section considered, assuming a parabolic variation of prestress over the transmission length.

16.4.4.2 Sections Uncracked in Flexure – It may be assumed that the ultimate shear resistance of a section uncracked in flexure, V_{co} ,corresponds to the occurrence of a maximum principal tensile stress, at the centroidal axis of the section, of

$$f_t = 0.24\sqrt{f_{ck}}$$

In the calculation of V_{co}, the value of f_{cp} shall be derived from the prestressing force after all losses have occurred, multiplied by the appropriate value of Y_{fL} (see 11.3.3).

The value of V_{co} is given by:

$$V_{co} = 0.67bh\sqrt{\left(f^2{}_t + f_{cp}f_t\right)}$$

…(equation 28)

where,

f_t is $0.24\sqrt{f_{ck}}$ taken as positive;

f_{cp} is the compressive stress at the centroidal axis due to prestress, taken as positive ;

*b is the breadth of the member which for T, I and L beams shall be replaced by the breadth of the rib.

h is the overall depth of the member.

NOTE: * Where the position of a duct coincides with the position of maximum principal tensile stress, e.g. at or near the junction of flange and web near a support, the value of b shall be reduced by the full diameter of the duct if ungrouted and by two-thirds of the diameter if grouted.

16.4.4.2.1 In flanged members where the centroidal axis occurs in the flange, the principal tensile stress shall be limited to $0.24\sqrt{f_{ck}}$ at the intersection of the flange and web; in this calculation, the algebraic sum of the stress due to the bending moment under ultimate loads and the stress due to prestress at this intersection shall be used in calculating V_{co}.

16.4.4.2.2 For a section with inclined tendons, the component of prestressing force (multiplied by the appropriate value of Y_{fL}) normal to the longitudinal axis of the member shall be algebraically added to V_{co}. This component shall be taken as positive where the shear resistance of the section is increased.

16.4.4.3 Sections Cracked in Flexure- The ultimate shear resistance of a section cracked in flexure V_{cr} may be calculated using equation 29:

$$V_{cr} = 0.037bd\sqrt{f_{ck}} + \frac{M_{cr}}{M}V$$

……(equation 29)

where,

d is the distance from the extreme compression fibre to the centroid of the tendons at the section considered;

M_{cr} is the cracking moment at the section considered;

$$M_{cr} = (0.37\sqrt{f_{ck}} + f_{pt})I/y$$

in which f_{pt} is the stress due to prestress only at the tensile fibre y from the centroid of the concrete section which has a second moment of area I: the value of f_{pt} shall be derived from the prestressing force after all losses have occurred, multiplied by the appropriate value of Y_{fL} (see 11.3.3):

V and M are the shear force and bending moment (both taken as positive) at the section considered due to ultimate loads;

V_{cr} shall be taken as not less than $0.1\ bd\sqrt{f_{ck}}$

16.4.4.4 Shear Reinforcement

16.4.4.4.1 Minimum shear reinforcement shall be provided in the form of stirrups/links such that:

$$\frac{A_{sv}}{S_v} = \frac{0.4b}{0.87f_{yv}}$$

where,

f_{yv} is the characteristic strength of the stirrup/link reinforcement but not greater than 415 N/mm^2;

A_{sv} is the total cross sectional area of the legs of the stirrups/links;

S_v is the stirrup/link spacing along the length or the beam.

Minimum shear reinforcement , shall also not be less than 0.20% of web area in plan in the case of mild steel reinforcement and 0.12% of web area in plan in the case of HSD bars.

16.4.4.4.2 When the shear force, V, due to the ultimate loads exceeds V_c the shear reinforcement provided shall be such that :

$$\frac{A_{sv}}{S_v} = \frac{V + 0.4bd_t - V_c}{0.87f_{yv}d_t}$$

16.4.4.4.3 Where stirrups/links are used, the area of longitudinal steel in the tensile zone shall be such that :-

$$A_s \geq \frac{V}{2(0.87f_y)}$$

where,

A_s is the area of effectively anchored longitudinal tensile reinforcement (see 15.9.7) and prestressing tendons (excluding debonded tendons);

f_y is the characteristic strength of the longitudinal reinforcement and prestressing tendons but not greater than 415N/mm^2.

16.4.4.4.4 In rectangular beams, at both corners in the tensile zone, a stirrup/link shall pass round a longitudinal bar, a tendon, or a group of tendons having a diameter not less than the stirrup/link diameter. In this clause on shear reinforcement, the effective depth, d_t, shall be taken as the depth from the extreme compression fibre either to these longitudinal bars or to the centroid of the tendons, whichever is greater. A stirrup/link shall extend as close to the tension and compression faces as possible, with due regard to cover. The stirrups/links provided at a cross section shall between them enclose all the tendons and additional reinforcement provided at the cross section and shall be adequately anchored (see 15.9.6.4).

16.4.4.4.5 The spacing of stirrups/links along a beam shall not exceed 0.75d, nor four times the web thickness for flanged beams. When V exceeds 1.8 V_c, the maximum spacing shall be reduced to 0.5d. The lateral spacing of the individual legs of the links provided at a cross section shall not exceed 0.75dt. In no case shall the spacing exceed 300mm. Also, the minimum spacing shall not be less than 75mm.

16.4.4.5 Maximum Shear Force – In no circumstances shall the shear force, V_a due to ultimate loads, exceed the appropriate value given by Table 26 multiplied by bd, where b is as defined in 16.4.4.2 less either the diameter of the duct for temporarily ungrouted ducts or two-thirds the diameter of the duct for grouted ducts; d is the distance from the compression face to the centroid of the area of steel in the tension zone, irrespective of its characteristic strength.

TABLE 26: MAXIMUM SHEAR STRESS

(Clause 16.4.4.5 , 16.5.2)

	CONCRETE GRADE			
	30 N/mm^2	40 N/mm^2	50 N/mm^2	60 and over N/mm^2
Maximum Shear Stress	4.1	4.7	5.3	5.8

16.4.4.6 Segmental Construction- In post-tensioned segmental construction, the shear force due to ultimate loads shall be not greater than :

$$0.7\, Y_{fL} P_h \tan\alpha_2$$

where,

Y_{fL} is the partial safety factor for the prestressing force, to be taken as 0.87:

P_h is the horizontal component of the prestressing force after all losses;

α_2 is the angle of friction at the joint.

Tan α_2 can vary from 0.7 for a smooth unprepared joint upto 1.4 for a castellated joint; a value greater than 0.7 shall only be used where justified by tests and agreed by the engineer.

16.4.5 Torsional Resistance of Beams

16.4.5.1 General - Torsion does not usually decide the dimensions of members; therefore, torsional design shall be carried out as a check after the flexural design. This is particularly relevant to some members in which the maximum torsional moment does not occur under the same loading as the maximum flexural moment. In such circumstances reinforcement and prestress in excess of that required for flexure and shear may be used in torsion.

16.4.5.2 Stresses and Reinforcement – Calculations for torsion are only required for the ultimate limit state and the torsional shear stresses shall be calculated assuming a plastic shear distribution.

Calculations for torsion shall be in accordance with 15.4.4 with the following modifications. When prestressing steel is used as transverse torsional steel, in accordance with equations 10 and 10(a) or as longitudinal steel, in accordance with equation 11, the stress assumed in design shall be the lesser of 415 N/mm^2 or ($0.87f_{pu} - f_{pe}$).

The compressive stress in the concrete due to prestress shall be taken into account separately in accordance with 15.4.4.5.

In calculating ($v+v_t$), for comparison with v_{tu} in Table 17, v shall be calculated from equation 8, regardless of whether 16.4.4.2 or 16.4.4.3 is critical in shear.

For concrete grades above M40 the values of v_{tu} given in Table 17 may be increased to 0.75 $\sqrt{f_{ck}}$ but not more than 5.8 N/mm^2.

16.4.5.3 Segmental Construction- When a structure to be constructed segmentally is designed for torsion, and additional torsional steel is necessary in accordance with equation 11, the distribution of this longitudinal steel, whether by reinforcement or prestressing tendons, shall comply with the recommendations of 15.4.4.5. Other arrangements may be used provided that the line of action of the longitudinal elongating force is at the centroid of the steel.

16.4.5.4 Other Design Methods – Alternative methods of designing members subjected to combined bending, shear and torsion may be used with the approval of the engineer, provided that it can be shown that they satisfy both the ultimate and serviceability limit state requirements.

16.4.6 Longitudinal Shear – For flanged beams where shear reinforcement is required to resist vertical shear, the longitudinal shear resistance of the flange and of the flange web junction shall be checked in accordance with 17.4.2.3.

16.4.7 Deflection of Beams

16.4.7.1 The instantaneous deflection due to design loads may be calculated using elastic analysis based on the concrete section properties and on the value for the modulus of elasticity given in 12.3.1.

The total long term deflection due to the prestressing force, dead load and any sustained imposed loading may be calculated using elastic analysis based on the concrete section properties and on an effective modulus of elasticity based on the creep of the concrete per unit length for unit applied stress after the period considered (specific creep). The values for specific creep given in 16.8.2.5 may in general be used unless a more accurate assessment is required. Due allowance shall be made for the loss of prestress after the period considered.

16.5 Slabs

16.5.1 The analysis of prestressed concrete slabs shall be in accordance with 15.5.1 provided that due allowance is made for moments due to prestress. The design shall be in accordance with 16.4.

16.5.2 The design for shear shall be in accordance with 16.4.4 except that shear reinforcement need not be provided if V is less than V_c.

16.5.2.1 In the treatment of shear stresses under concentrated loads, the ultimate shear resistance of a section uncracked in flexure, V_{co} ,may be taken as corresponding to the occurrence of a maximum principal tensile stress of $f_t = 0.24\sqrt{f_{ck}}$ at the centroidal axis around the critical section which is assumed as a perimeter h/2 from the loaded area. The values of V_{co} given in Table 26 may be used with b being taken as the length of the critical perimeter. Reinforcement, if necessary, shall be provided in accordance with 16.4.4.4.

16.6 Columns

16.6.1 Prestressed concrete columns, where the mean stress in the concrete section imposed by the tendons is less than 2.5N/mm^2, may be analysed as reinforced columns in accordance with 15.6, otherwise the full effects of the prestress shall be considered.

16.7 Tension Members

16.7.1 The tensile strength of tension members shall be based on the design strength ($0.87f_{pu}$) of the prestressing tendons and the strength developed by any additional reinforcement. The additional reinforcement may usually be assumed to be acting at its design stress ($0.87f_y$): in special cases it may be necessary to check the stress in the reinforcement using strain compatibility.

16.7.2 Members subject to axial tension shall also be checked at the serviceability limit state to comply with the appropriate stress limitations of 16.4.2.4.

16.8 Prestressing Requirements

16.8.1 Maximum Initial Prestress- Immediately after anchoring the force in the prestressing tendon shall not exceed 70% of the characteristic strength for post-tensioned tendons, or 75% for pre-tensioned tendons. The jacking force may be increased to 80% during stressing, provided that additional consideration is given to safety, to the stress- strain characteristics of the tendon, and to the assessment of the friction losses.

16.8.1.1 In determining the jacking force to be used, consideration shall also be given to the gripping or anchorage efficiency of the anchorage (see 7.2.5.4.3).

16.8.1.2 Where deflected tendons are used in pre-tensioning systems, consideration shall be given, in determining the maximum initial prestress, to the possible influence of the size of the deflector on the strength of the tendons. Attention shall also be paid to the effect of any frictional forces that may occur.

16.8.2 Loss of Prestress, Other Than Friction Losses

16.8.2.1 General- Allowance shall be made when calculating the forces in tendons at the various stages in design for the appropriate losses of prestress resulting from:

(a) relaxation of the steel comprising the tendons;

(b) the elastic deformation and subsequent shrinkage and creep of the concrete;

(c) slip or movement of tendons at anchorage during anchoring;

(d) other causes in special circumstances, e.g. when steam curing is used with pretensioning.

If experimental evidence on performance is not available, account shall be taken of the properties of the steel and of the concrete when calculating the losses of prestress from these causes. For a wide range of structure, the simple recommendations given in this clause shall be used; it should be recognized, however, that these recommendations are necessarily general and approximate.

16.8.2.2 Loss of Prestress due to Relaxation of Steel- The thousand hour relaxation loss value shall be obtained from the manufacturer of prestressing steel. This data shall be independently cross checked to ascertain its veracity. The independently checked data shall be adopted for extrapolating the final relaxation loss value occurring at about 0.5×10^6h which shall be taken as 2.5 times (for low relaxation prestressing steel strands 3 times) the 1000 hrs value at 30° C. The above value shall be for initial stress level of 70% of the characteristic strength reducing to 0 at 50% of the characteristic strength. The intermediate value may be interpolated linearly.

Where there is no experimental data available and the force at the time of transfer in the tendon is less than 70% of the characteristic strength, the 1000 hrs relaxation loss (at 30° C) may be assumed to decrease linearly from 4% (2.5% for low relaxation prestressing steel strand) for an initial prestress of 70% of the characteristic strength to 0 for an initial prestress of 50% of the characteristic strength.

No reduction in the value of the relaxation loss shall be made for a tendon when a load equal to or greater than the relevant jacking force has been applied for a short time prior to the anchorage of the tendon.

16.8.2.2.1 In special cases, such as tendons at high temperatures or subjected to large lateral loads (e.g. deflected tendons), greater relaxation losses will occur. Specialist literature should be consulted in these cases.

16.8.2.3 Loss of prestress due to Elastic Deformation of the Concrete - Calculation of the immediate loss of force in the tendons due to elastic deformation of the concrete at transfer may be based on the values for the modulus of elasticity of the concrete given in 5.2.2.1. The modulus of elasticity of the tendons may be obtained from 4.6.2.

16.8.2.3.1 For pre-tensioning, the loss of prestress in the tendons at transfer shall be calculated on a modular ratio basis using the stress in the adjacent concrete.

16.8.2.3.2 For members with post-tensioning tendons that are not stressed simultaneously, there is a progressive loss of prestress during transfer due to the gradual application of the prestressing force. The resulting loss of prestress in the tendons shall be calculated on the

basis of half the product of the modular ratio and the stress in the concrete adjacent to the tendons, averaged along their length; alternatively, the loss of prestress may be computed exactly based on the sequence of tensioning.

16.8.2.3.3 In making these calculations, it may usually be assumed that the tendons are located at their centroid.

16.8.2.4 Loss of prestress due to Shrinkage of the Concrete - The loss of prestress in the tendons due to shrinkage of the concrete may be calculated from the modulus of elasticity for the tendons given in 4.6.2 assuming the values for shrinkage per unit length given in 5.2.3.

16.8.2.4.1 When it is necessary to determine the loss of prestress and the deformation of the concrete at some stage before the total shrinkage is reached, it may be assumed for normal aggregate concrete that half the total shrinkage takes place during the first month after transfer and that three-quarters of the total shrinkage takes place in the first 6 months after transfer.

16.8.2.5 Loss of Prestress due to Creep of the Concrete - The loss of prestress in the tendons due to creep of the concrete shall be calculated on the assumption that creep is proportional to stress in the concrete for stress of up to one-third of the cube strength at transfer. The loss of prestress is obtained from the product of the modulus of elasticity of the tendon (see 4.6.2) and the creep of the concrete adjacent to the tendons. Usually it is sufficient to assume, in calculating this loss, that the tendons are located at their centroid. Creep of the concrete per unit length may be taken from 5.2.4.1.

16.8.2.5.1 The figures for creep of the concrete per unit length relate to the ultimate creep after a period of years. When it is necessary to determine the deformation of the concrete due to creep at some earlier stage, it may be assumed that half the total creep takes place in the first month after transfer and that three quarters of total creep takes place in the first 6 months after transfer. For special cases reference to expert literature may be made for Creep.

16.8.2.6 Loss of Prestress during Anchorage – In post tensioning systems allowance shall be made for any movement of the tendon at the anchorage when the prestressing force is transferred from the tensioning equipment to the anchorage. The loss due to this movement is particularly important in short members, and for such members the allowance made by the designer shall be checked on the site.

16.8.2.7 Loss of Prestress due to Steam Curing - Where steam curing is employed in the manufacture of prestressed concrete units, changes in the behaviour of the material at higher than normal temperature will need to be considered. In addition, where the 'long-line' method of pre-tensioning is used there may be additional losses as a result of bond developed between the tendon and the concrete when the tendon is hot and relaxed. Since the actual losses of prestress due to steam curing are a function of the techniques used by the various manufacturers, specialist advice should be sought.

16.8.3 Loss of Prestress due to Friction

16.8.3.1 General – In post-tensioning systems there will be movement of the greater part of the tendon relative to the surrounding duct during the tensioning operation, and if the tendon is in contact with either the duct or any spacers provided, friction will cause a reduction in the prestressing force as the distance from the jack increases, in addition, a certain amount of friction will be developed in the jack itself and in the anchorage through which the tendon passes.

16.8.3.1.1 In the absence of evidence established to the satisfaction of the engineer, the stress variation likely to be expected along the design profile shall be assessed in accordance with 16.8.3.2 to 16.8.3.4 in order to obtain the prestressing force at the critical sections considered in design.

16.8.3.1.2 The extension of the tendon shall be calculated allowing for the variation in tension along its length.

16.8.3.2 Friction in the Jack and Anchorage – This is directly proportional to the jack pressure, but it will vary considerably between systems and shall be ascertained for the type of jack and the anchorage system to be used.

16.8.3.3 Friction in the Duct due to Unintentional variation from the Specified Profile - Whether the desired duct profile is straight or curved or a combination of both, there will be slight variations in the actual line of the duct, which may cause additional points of contact between the tendon and the sides of the duct, and so

produce friction. The prestressing force, Px at any distance x from the jack may be calculated from :

$$P_x = P_o e^{-Kx} \quad \text{.....(equation 31)}$$

and where $Kx \leq 0.2$, e^{-Kx} may be taken as (1-Kx)

where,

P_o is the prestressing force in the tendon at the jacking end;

e is the base of Napierian logarithms(2.718);

K is the constant depending on the type of duct or sheath employed, the nature of its inside surface, the method of forming it and the degree of vibration employed in placing the concrete. **(See the values from Table 26A);**

x is the actual length of tendon between jacking point and the point where pre-stressing force after loss is to be calculated.

16.8.3.4 Friction in the Duct due to Curvature of the Tendon- When a tendon is curved, the loss of tension due to friction is dependent on the angle turned through and the coefficient of friction μ , between the tendon and its supports.

The prestressing force P_x, at any distance, x along the curve from the tangent point may be calculated from:

$$P_x = P_o e^{-\mu x/r_{ps}} \quad \text{.....(equation 32)}$$

where,

P_o is the prestressing force in the tendons at the tangent point near the jacking end.

r_{ps} is the radius of curvature

where $\mu x/r_{ps} < 0.2$, $e^{-\mu x/r_{ps}}$ may be taken as $(1-\mu x/r_{ps})$

where $(Kx + \mu x/r_{ps}) < 0.2$, $e^{-(Kx + \mu x/r_{ps})}$ may be taken as $\{1-(Kx + \mu x/r_{ps})\}$

Values of μ may be taken from **Table 26A.**

"The value of μ and K given in Table 26A may be adopted for calculating friction losses as per equations 31 and 32.

TABLE 26 A : VALUES OF μ AND *K* TO BE ADOPTED FOR CALCULATING FRICTION LOSSES

(Clause 16.8.3.3, 16.8.3.4

TYPE OF HIGH TENSILE STEEL	TYPE OF DUCT OR SHEATH	VALUES RECOMMENDED TO BE USED IN DESIGN	
		K PER METRE	μ
Wire cables	Bright metal	0.0091	0.25
	Galvanized	0.0046	0.2
	Lead coated	0.0046	0.18
	Unlined duct in concrete	0.0046	0.45
Uncoated stress relieved strands	Bright Metal	0.0046	0.25
	Galvanized	0.0030	0.20
	Lead coated	0.0030	0.18
	Unlined duct in concrete	0.0046	0.50
	Corrugated HDPE	0.0020	0.17

NOTE 1- Values to be used in design may be altered to the values observed, on satisfactory evidence in support of such values.

NOTE 2- For multi-layer wire cables with spacer plates providing lateral separation, the value of μ may be adopted on the basis of actual test results.

NOTE 3- When the direction of friction is reversed, the index of 'e' in the formulae shall be negative.

NOTE 4 - The above formula is of general application and can be used for estimation of friction between any

two points along the tendon distant 'x' from each other.

NOTE 5 - The values of μ and K used in design shall be indicated on the drawings for guidance in selection of the material and the methods that will produce results approaching the assumed values.

16.8.3.5 Lubricants - Lubricants may be specified to ease the movement of tendons in the ducts. Lower values of μ than those given in 16.8.3.4 may then be used, subject to their being determined by trial and agreeable to the engineer.

16.8.4 Transmission Length in Pre-tensioned Members - The transmission length is defined as the length over which a tendon is bonded to concrete to transmit the initial prestressing force in a tendon to the concrete.

The transmission length depends on a number of variables, the most important being:

(a) the degree of compaction of the concrete;

(b) the strength of the concrete;

(c) the size and type of tendon;

(d) the deformation (e.g. crimp) of the tendon;

(e) the stress in the tendon and

(f) the surface condition of the tendon.

The transmission lengths for the tendon towards the top of a unit may be greater than those at the bottom.

The sudden release of tendons may also cause a considerable increase in the transmission lengths.

16.8.4.1 In view of these many variables, transmission lengths shall be determined from tests carried out under the most unfavorable conditions of each casting yard both under service conditions and under ultimate loads. In the absence of values based on actual tests, the following values may be used provided the concrete is well compacted and its strength at transfer is not less than 35N/mm^2 and the tendon is released gradually:

(1) for plain and indented wires 100 ϕ

(2) for crimped wires 65ϕ

(3) for strands 35ϕ

where ϕ is the diameter of tendons.

16.8.4.2 The development of stress form the end of the unit to the point of maximum stress shall be assumed to vary parabolically over the transmission length.

16.8.4.3 If the tendons are prevented from bonding to the concrete near the ends of the units by the use of sleeves or tape, the transmission lengths shall be taken from the ends of the de-bonded portions.

16.8.5 End Blocks - The end block (also known as the anchor block or end zone) is defined as the highly stressed zone of concrete around the termination points of a pre- or post -tensioned prestressing tendon. It extends from the points of application of prestress (i.e. the end of the bonded part of the tendon in pre tensioned construction or the anchorage in post-tensioned construction) to that section of the member at which linear distribution of stress is assumed to occur over the whole cross-section.

16.8.5.1 The following aspects of design shall be considered in assessing the strength of end blocks:

(a) bursting forces around individual anchorages;

(b) overall equilibrium of the end block;

(c) spalling of the concrete form the loaded face around anchorages.

16.8.5.1.1 In considering each of these aspects, particular attention shall be given to factor such as the following:

(1) shape, dimensions and position of anchor plates relative to the cross-section of the end block:

(2) the magnitude of the prestressing forces and the sequence of prestressing;

(3) shape of the end block relative to the general shape of the member;

(4) layout of anchorages including asymmetry group effects and edge distances;

(5) influence of the support reaction;

(6) forces due to curved or divergent tendons.

16.8.5.2 The following recommendations are appropriate to a circular, square or rectangular anchor plate, symmetrically positioned on the end face of a square or rectangular post-tensioned member, the recommendations are followed by some guidance on other aspects.

16.8.5.2.1 The bursting tensile forces in the end blocks, or end regions of bonded post-tensioned members, shall be assessed on the basis of the tendon jacking load. For temporarily unbonded members, the bursting tensile forces shall be assessed on the basis of the tendon jacking load or the load in the tendon at the ultimate limit state, calculated using 16.2.4.3 whichever is the greater.

16.8.5.2.2 The bursting tensile force , F_{bst} ,existing in an individual square end block loaded by a symmetrically placed square anchorage or bearing plate, may be derived from Table 27,

where,

Y_o is half the side of end block;

Y_{po} is half the side of loaded area;

P_k is the load in the tendon assessed in accordance with the preceding paragraph;

F_{bst} is the bursting tensile force.

This force, F_{bst}, will be distributed in a region extending from $0.2Y_o$ to $2Y_o$ from the loaded face of the end block. Reinforcement provided to sustain the bursting tensile force may be assumed to be acting at its design strength ($0.87f_y$), except that the stress shall be limited to a value corresponding to a strain of 0.001 when the concrete cover to the reinforcement is less than 50mm.

16.8.5.2.3 In the rectangular end block, the bursting tensile forces in the two principal directions shall be assessed on the basis of the formulae in Table 27.

TABLE 27: DESIGN BURSTING TENSILE FORCES IN END BLOCKS

(CLAUSE 16.8.5.2)

Y_{po}/Y_0	0.3	0.4	0.5	0.6	0.7
F_{bst}/P_k	0.23	0.20	0.17	0.14	0.11

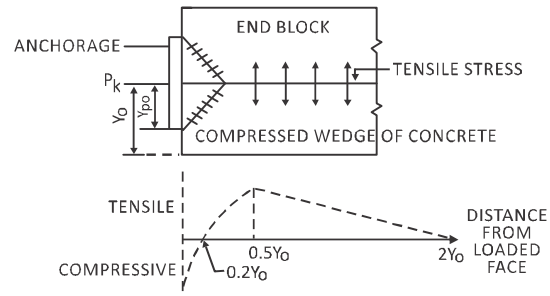

Figure 13: Bursting Tensile Stress Distribution

16.8.5.2.4 When circular anchorage or bearing plates are used, the side of the equivalent square area shall be derived.

16.8.5.3 Where groups of anchorages or bearing plates occur, the end blocks shall be divided into a series of symmetrically loaded prisms and each prism treated in the preceding manner. In detailing the reinforcement for the end block as a whole it is necessary to ensure that the groups of anchorages are appropriately tied together.

16.8.5.4 Special attention shall be paid to end blocks having a cross- section different in shape from that of the general cross-section of the beam; reference should be made to the specialist literature.

16.8.5.5 Compliance with the preceding recommendations will generally ensure that bursting tensile forces along the load axis are provided for. Alternative methods of design which use higher values of F_{bst}/P_k and allow for the tensile strength of concrete may be more appropriate in some cases, particularly where large concentrated tendon forces are involved.

16.8.5.6 Consideration shall also be given to the spalling tensile stresses that occur in end blocks where the anchorage or bearing plates are highly eccentric; these reach a maximum at the loaded face.

16.9 Considerations Affecting Design Details

16.9.1 General- The considerations in 16.9.2 to 16.9.6 are intended to supplement those for reinforced concrete given in 15.9.

16.9.2 Cover to Prestressing Tendons and Reinforcement

16.9.2.1 General- The cover to prestressing tendons will generally be governed by considerations of durability.

16.9.2.2 Prestressing Tendons in Pre-tensioned structures:- For pre-stressing wires and strands a minimum cover of 50mm shall be provided for all types of environment conditions.

16.9.2.2.1 The recommendations of 15.9.2 concerning cover to the reinforcement may be taken to be applicable in case of pre-tensioned members.

16.9.2.3 Tendons in Ducts- The cover to any duct shall be not less than 75mm.

16.9.2.3.1 Recommendations for the cover to curved ducts are given in Appendix E.

16.9.2.3.2 The recommendations as given in 15.9.2, concerning cover to reinforcement, may be taken to be applicable in case of post tensioned members also.

16.9.3 Spacing of Prestressing Tendons

16.9.3.1 General- In all prestressed members there shall be sufficient gaps between the tendons or bars to allow the largest size of aggregate used to move under vibration, to all parts of the mould. Use of high capacity tendons shall be preferred to avoid grouping and reduced the number of cables.

16.9.3.2 Pre-tensioned Tendons- The recommendations of 15.9.8.1 concerning spacing of reinforcement may be taken to be applicable. In pre-tensioned members, where anchorage is achieved by bond, the spacing of the wires or strands in the ends of the members shall be such as to allow the transmission lengths given in 16.8.4 to be developed. In addition, if the tendons are positioned in two or more widely spaced groups, the possibility of longitudinal splitting of the member shall be considered.

16.9.3.3 Tendons in Ducts- The clear distance between ducts or between ducts and other tendons shall be not less than the following, whichever is the greatest:

(a) h_{agg}+5mm, where h_{agg} is the maximum size of the coarse aggregate;

(b) in the vertical direction: the vertical internal dimension of the duct;

(c) in the horizontal direction: the horizontal internal dimension of the duct: where internal vibrators are used minimum clear distance shall be 10mm more than dia of needle vibrator.

16.9.3.3.1 Where two or more rows of ducts are used the horizontal gaps between the ducts shall be vertically in line wherever possible, for ease of construction.

16.9.3.3.2 Recommendations for the spacing of curved tendons in ducts are given in Appendix E.

16.9.3.4 No cable shall be anchored in the deck slab.

16.9.4 Longitudinal Reinforcement in Prestressed Concrete Beams- Reinforcement may be used in prestressed concrete members either to comply with the recommendations of 16.9.4.1 or 16.4.4.4.

16.9.4.1 Reinforcement may be necessary, particularly where post-tensioning systems are used to control any cracking resulting from restraint to longitudinal shrinkage of members provided by the formwork during the time before the prestress is applied.

16.9.4.2 Minimum Reinforcement

16.9.4.2.1 General - The quantity of untensioned steel required for design or constructional purposes shall not be less than the minimum stipulated in clauses 16.9.4.2.2 to 16.9.4.2.4. Various types of minimum steel requirements need not be added together. Bars in such reinforcement shall, however, not be placed more than 200mm apart. The minimum diameter shall not be less than 10mm for severe condition of exposure and 8mm for moderate condition of its exposure.

In case of in-situ segmental construction for

bridges located in marine environment continuity of untensioned reinforcement from one segment to the next shall be ensured.

16.9.4.2.2 In the vertical direction, a minimum reinforcement shall be provided in the bulb/web of the beams/rib of box girders, such reinforcement being not less than 0.3% of the cross sectional area of the bulb/web in plan for mild steel and 0.18% for HSD bars respectively. Such reinforcement shall be as far as possible uniformly spaced along the length of the web. In the bulb portion the cross sectional area of the bulb in plan shall be taken.

In all the corners of the sections, these reinforcements should pass round a longitudinal bar having a diameter of not less than that of the vertical bar or round a group of tendons. For T beams, the arrangement in the bulb portion shall be as shown in Fig. 13A.

16.9.4.2.3 Longitudinal reinforcements provided shall not be less than 0.25% and 0.15% of the gross cross sectional area of the section for mild steel and HSD bars respectively, where the specified grade of concrete is less than M45. In case the grade of concrete is M45 or more, the provision shall be increased to 0.3% and 0.18% respectively. Such reinforcement shall as far as possible be evenly distributed on the periphery. Non-prestressed high tensile reinforcement can also be reckoned for the purpose of fulfilling the requirement of this clause.

16.9.4.2.4 For solid slabs and top and bottom slabs of box girders, the top and underside of the slabs shall be provided with reinforcement consisting of a grid formed by layers of bars. The minimum steel provided shall be as follows:

(i) For solid slabs and top slab of box girders: 0.3% and 0.18% of the gross cross sectional area of the slab for mild steel and HSD bars respectively, which shall be equally distributed at top and bottom.

(ii) For soffit slab of box girders: The longitudinal steel shall be at least 0.3% and 0.18% of cross sectional area for mild steel and HSD bars respectively. The minimum transverse reinforcement shall be 0.5% and 0.3% of the cross sectional area for mild steel and HSD bars respectively. The minimum reinforcement shall be equally distributed at top and bottom.

16.9.4.2.5 For cantilever slab minimum reinforcement of 4 numbers of 16mm dia. HSD bars or 6 nos. of 16mm dia. MS bars should be provided with minimum spacing at the tip divided equally between the top and bottom surface parallel to support.

N.B. Notwithstanding the nomenclature "untensioned steel", this provision of reinforcement may be utilized for withstanding all action effects, if necessary.

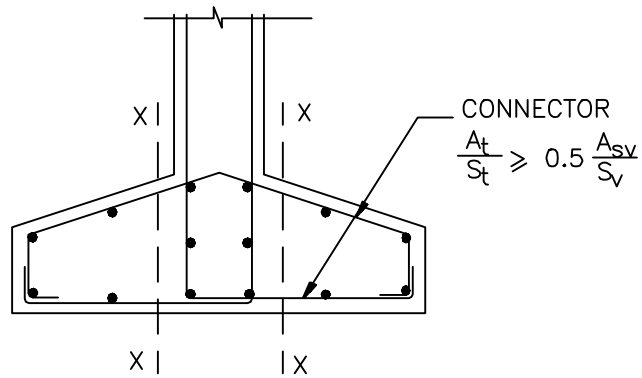

Connector details at tension flange (bulb) of T-beam

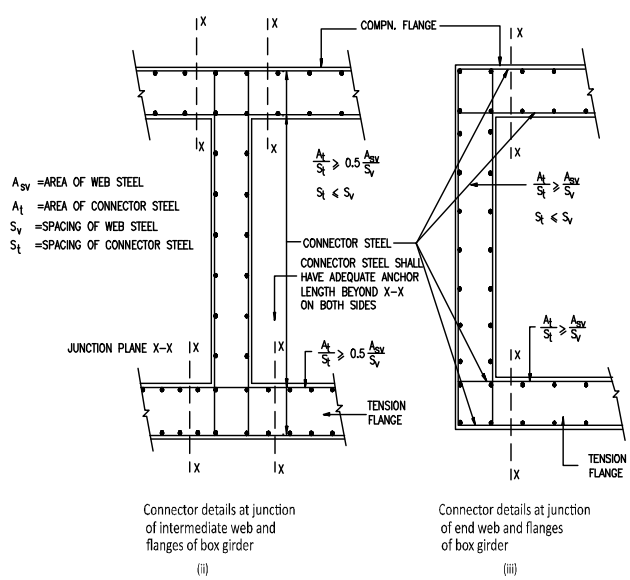

Fig. 13A CONNECTOR REINFORCEMENT FOR COMPRESSION FLANGE AND TENSION FLANGE

16.9.5 Stirrups/Links in Prestressed Concrete Beams- The amount and disposition of stirrups/links in rectangular beams and in the webs of flanged beams will normally be governed by considerations of shear (see 16.4.4).

Stirrups/links to resist the bursting tensile forces in the end zones of post-tensioned members shall be provided in accordance with 16.8.5.

Stirrups/links shall be provided in the transmission lengths of pre-tensioned members in accordance with 16.4.4. and using the information given in 16.8.4.

16.9.6 Minimum Dimensions

16.9.6.1 Deck Slab- The minimum thickness of the deck slab shall be 200mm for normal exposure conditions and 220mm for severe and extreme exposure conditions. The thickness at the tip of the cantilever shall not be less than 150mm.

16.9.6.2 Web Thickness- In the case of post-tensioned girders, the minimum web thickness shall be as under:

(i) for webs having single duct: The minimum thickness of web in mm should be:

$$d+120+2(c+d_1+d_2)$$

(ii) for webs having two ducts at the same level, minimum thickness of web should be greater of:

(a) $2d+60+2(c+d_1+d_2)$

(b) $3d+150$

where,

d = external dia of sheath in mm

d_1= dia of vertical stirrups in mm

d_2= dia of longitudinal reinforcement in mm

c = clear cover to vertical stirrups in mm.

16.9.6.3 Bottom Slab Thickness in Box Girders- In case of post-tensioned box girders, the minimum bottom slab thickness shall be 150mm.

16.9.6.4 Deck Width – The minimum deck width between inside faces of ballast retainer shall be 4500mm.

16.9.6.5 Minimum clearance in case of PSC superstructures:

Following minimum clearance to be ensured for proper inspection of pre-stressed structures:

(a) Minimum vertical clearance inside PSC BOX Girder shall be 900mm.

(b) Minimum gap between ballast wall and the girder shall be 600mm.

(c) Minimum gap between ends of the girders at piers shall be 1200mm.

(d) Size of opening in the diaphragms of PSC box girder shall be 600mm x 900mm (width x Height).

16.9.7 Design of Diaphragms

16.9.7.1 Design of diaphragms in case of box girders shall be based on any rational method approved by the engineer.

16.9.7.2 Spacing of Diaphragms - The spacing of diaphragms shall be such as to ensure even distribution of the live load.

If the deck is supported on prestressed concrete beams, two end diaphragms and a minimum of one intermediate diaphragm shall be provided. In case of box girders, at least two end diaphragms shall be provided which will have suitable opening for a man to enter the girder for inspection.

16.9.7.3 Guidance may also be obtained from 15.9.11 for detailing of diaphragms in a prestressed concrete girder.

16.9.8 Number of Stages of Prestress- The number of stages of prestress shall be reduced to the minimum, preferably not more than two.

16.9.9 Emergency Cables - Besides design requirements, additional cables/strands shall be symmetrically placed in the structure so as to be capable of generating a prestressing force of about 4% of the total design prestressing force in the structure. Only those cables which are required to make up the deficiency shall be stressed and the remaining pulled out and the

duct holes grouted. This shall be done in consultation with the designer.

16.9.10 Future Cables - Provision for easy installation of prestressing steel at a later date shall be made in the case of girders so as to cater for an increased prestressing force in the event it is required in service. This provision shall be made to cater for an additional minimum prestressing force of 15% of the design prestressing force.

16.9.11 Shock Loading - When a prestressed concrete beam may be required to resist shock loading, it shall be reinforced with closed links and longitudinal reinforcement preferably of Grade Fe 250 steel. Other methods of design and detailing may be used provided it can be shown that the beam can develop the required ductility.

16.9.12 Provision should be made at the design stage for inside, outside and ends inspection of girder and inspection of bearings.

16.9.13 Elastomeric Bearings – Use of elastomeric bearing in prestress concrete bridges should preferably be restricted up to maximum clear span of 30.5m.

17 DESIGN AND DETAILING: PRECAST AND COMPOSITE CONSTRUCTION

17.1 General

17.1.1 Introduction – This clause is concerned with the additional considerations that arise in design and detailing when precast members or precast components including large panels are incorporated into a structure or when a structure in its entirety is precast concrete construction. However, precast segmental bridge construction shall be done with the prior approval of Railway Board.

17.1.2 Limit State Design

17.1.2.1 Basis of Design – The limit state philosophy set out in clause 10 applies equally to precast and in situ construction and therefore, in general, the recommended methods of design and detailing for reinforced concrete given in clause 15 and those for prestressed concrete given in clause 16 apply also to precast and composite construction.

Sub-clauses in clause 15 or 16 which do not apply are either specifically worded for in situ construction or are modified by this clause.

17.1.2.2. Handling Stresses- Precast units shall be designed to resist without permanent damage all stresses induced by handling, storage, transport and erection (see also 16.4.1.2.).

The position of lifting and supporting points shall be specified. Consultation at the design stage with those responsible for handling is an advantage.

The design shall take account of the effect of snatch lifting and placing on to supports.

17.1.2.3 Connections and Joints- The design of connections is of fundamental importance in precast construction and shall be carefully considered.

Joints to allow for movements due to shrinkage, thermal effects and possible differential settlement of foundations are of as great importance in precast as in insitu construction. The number and spacing of such joints shall be determined at an early stage in the design. In the design of beam and slab ends on corbels and nibs, particular care shall be taken to provide overlap and anchorage, in accordance with 15.9.7, of all reinforcement adjacent to the contact faces, full regard being paid to construction tolerances.

17.2 Precast Concrete Construction

17.2.1 Framed Structures and Continuous Beams – When the continuity of reinforcement or tendons through the connections and/or the interaction between members is such that the structure will behave as a frame, or other rigidly interconnected system, the analysis, redistribution of moments and the design and detailing of individual members, may all be in accordance with clause 15 or 16, as appropriate.

17.2.2 Other Precast Members – All other precast concrete members including large panels shall be designed and detained in accordance with the appropriate recommendations of clauses 14,15and16 shall incorporate provision for the appropriate connections as recommended in 17.3.

Precast components intended for use in composite construction (see 17.4) shall be designed as such but also checked or designed for the conditions

arising during handling, transporting and erecting.

17.2.3 Supports for Precast Members

17.2.3.1 Concrete Corbels- A corbel is a short cantilever beam in which the principal load is applied such that the distance a_v, between the line of action of the load and the face of the supporting member is less than 0.6d and the depth at the outer edge of the bearing is not less than one-half of the depth at the face of the supporting member.

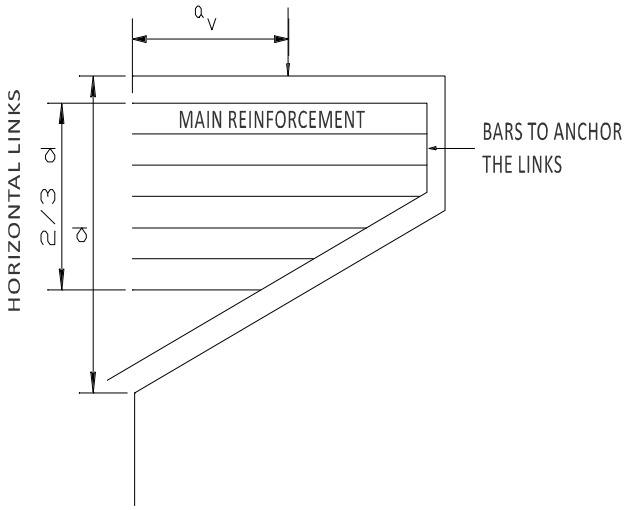

FIG. 14. Horizontal links in corbel

The depth at the face of the supporting member shall be determined from shear conditions in accordance with 15.4.3.2, but using the modified definition of a_v given in preceding paragraph.

17.2.3.1.1 The main tension reinforcement in a corbel shall be designed and the strength of the corbel checked, on the assumption that it behaves as a simple strut and tie system.

The reinforcement so obtained, shall be not less than 0.4% of the section at the face of the supporting member and shall be adequately anchored. At the front face of the corbel, the reinforcement shall be anchored by bending back the bars to form a loop; the bearing area of the load shall not project beyond the straight portion of the bars forming the main reinforcement.

17.2.3.1.2 When the corbel is designed to resist a slated horizontal force additional reinforcement shall be provided to transmit this force in its entirety; the reinforcement shall be adequately anchored within the supporting member.

17.2.3.1.3 Shear reinforcement shall be provided in the form of horizontal links/stirrups distributed in the upper two-thirds of the effective depth of the corbel at column face; this reinforcement need not be calculated but shall be not less than one-half of the area of the main tension reinforcement and shall be adequately anchored.

17.2.3.1.4 The corbel shall also be checked at the serviceability limit states.

17.2.3.2 Width of Supports for Precast Units – The width of supports for precast units shall be sufficient to ensure proper anchorage of tension reinforcement in accordance with 15.9.7.

17.2.3.3 Bearing Stresses - The compressive stress in the contact area shall not exceed 0.4 f_{ck} under the ultimate loads. When the members are made of concretes of different strengths, the lower concrete strength is applicable.

Higher bearing stresses may be used where suitable measures are taken to prevent splitting or spalling of the concrete, such as the provision of well-defined bearing areas and additional binding reinforcement in the ends of the members. Bearing stresses due to ultimate loads shall then be limited to :

$$\frac{1.5 f_{ck}}{1 + 2\sqrt{A_{con}/A_{sup}}}, \quad \text{but not more than } f_{ck}$$

where,

A_{con} is the contact area;

A_{sup} is the supporting area.

17.2.3.3.1 Higher bearing stresses due to ultimate loads shall be used only where justified by tests, e.g. concrete hinges.

17.2.3.4 Horizontal Forces or Rotations at Bearings – The presence of significant horizontal forces at a bearing can reduce the load carrying capacity of the supporting and supported member considerably by causing premature splitting or shearing. These forces may be

due to creep, shrinkage and temperature effects or result from misalignment, lack of plumb or other causes. When they are likely to be significant these forces shall be allowed for in designing and detailing the connection by providing either:

(a) sliding bearings: or

(b) suitable lateral reinforcement in the top of supporting member and

(c) continuity reinforcement to tie together the ends of the supported members.

Where, owing to large spans or other reasons, large rotations are likely to occur at the end supports of flexural members, suitable bearings capable of accommodating these rotations shall be used.

17.2.4 Joints between Precast Members

17.2.4.1 General – The critical sections of members close to joints shall be designed to resist the worst combinations of shear, axial force and bending caused by the ultimate vertical and horizontal forces. When the design of the precast members is based on the assumption that the joint between them is not capable of transmitting bending moment, the design of the joint shall either ensure that this is so (see 17.2.3.4) or suitable precautions shall be taken to ensure that if any cracking develops it will not excessively reduce the member's resistance to shear or axial force and will not be unsightly.

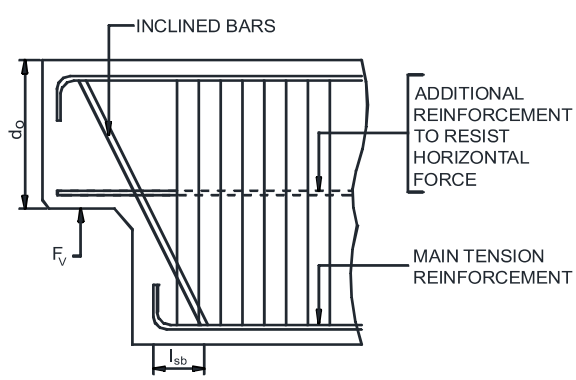

Figure 15: Halving Joint (Diagrammatic Only)

Where a space is left between two or more precast units, to be filled later with in situ concrete or mortar the space shall be large enough for the filling material to be placed easily and compacted sufficiently to fill the gap completely, without abnormally high standards of workmanship or supervision. The erection instructions shall contain definite information as to the stage during construction when the gap should be filled.

The majority of joints will incorporate a structural connection (see 17.3) and consideration to this aspect should be given in the design of joint.

17.2.4.2 Halving Joint – It is difficult to provide access to this type of joint to reset or replace the bearings, Halving joints should only be used where it is absolutely essential.

For the type of joint shown in Fig.15, the maximum vertical ultimate load, F_v, shall not exceed $4v_c bd_o$, where b is the shear breadth of the beam, d_o is the depth of additional reinforcement to resist horizontal loading and v_c is the stress given by Table 15 for the full beam section. When determining the value of ,F_v, consideration shall be given to the method of erection and the forces involved.

The joint shall be reinforced by inclined links so that the vertical component of force in the link is equal to F_v i.e. :

$$F_v = A_{sv}(0.87f_{yv}) \cos 45^o \text{ for links at } 45°$$

where,

A_{sv} is the cross sectional area of the legs of the inclined links.

f_{yv} is the characteristic strength of the inclined links.

The links and any longitudinal reinforcement taken into account should intersect the line of action of F_v.

In the compression face of the beam the links shall be anchored in accordance with 15.9.6.4. In the tension face of the beam the horizontal component, F_h, which for 45° links is equal to F_v, should be transferred to the main reinforcement, If the main reinforcement is continued straight on without hooks or bends the links may be considered anchored if:

$$\frac{Fh}{2\sum u_s l_{sb}} \langle \text{ the anchorage bond stress as given in Table 20.}$$

where,

$\sum u_s$ is the sum of the effective perimeters of the reinforcement.

l_{sb} is the length of the straight reinforcement beyond the intersection with the link.

If the main reinforcement is hooked or bent vertically, the inclined links shall be anchored by bending them parallel to the main reinforcement; in this case, or if inclined links are replaced by bent-up bars, the bearing stress inside the bends shall not exceed the value given in 15.9.6.8.

If there is a possibility of a horizontal load being applied to the joint horizontal links shall be provided to carry the load (as shown in Fig.15); such links shall also be provided if there is possibility of the inclined links being displaced so that they do not intersect the line of action of F_v.

The joint may alternatively be reinforced with vertical links, designed in accordance with 15.4.3, provided the links are adequately anchored.

The Joint shall also be checked at the serviceability limit states.

17.3 Structural Connections Between Units

17.3.1 General

17.3.1.1 Structural Requirements of Connection – When designing and detailing the connections across joints between precast members the overall stability of the structure, including its stability during construction, shall be considered.

17.3.1.2 Design Method – Connections shall where possible, be designed in accordance with the generally accepted methods applicable to reinforced concrete (see clause 15), prestressed concrete (see clause 16) or structural steel.

17.3.1.3 Consideration Affecting Design Details – In addition to ultimate strength requirements the following shall be considered.

(a) **Protection –** Connection shall be designed to maintain the standard of protection against weather and corrosion required for the remainder of the structure.

(b) **Appearance -** Where connections are to be exposed, they shall be so designed that the quality of appearance required for the remainder of the structure can be readily achieved.

(c) **Manufacture, Assembly and Erection –** Methods of manufacture and erection shall be considered during design and the following points should be given particular attention.

(1) Where projecting bars or sections are required, they shall be kept to a minimum and made as simple as possible. The length of such projections shall be not more than necessary for security.

(2) Fragile fins and nibs shall be avoided.

(3) Fixing devices shall be located in concrete section of adequate strength.

(4) The practicability of both casting and assembly shall be considered.

(5) Most connections require the introduction of suitable jointing material. Sufficient space shall be allowed in the design for such material to ensure that the proper filling of the joint is practicable.

17.3.1.4 Factors Affecting Design and Construction - The strength and stiffness of any connection can be significantly affected by workmanship on site. The following points shall be considered where appropriate.

(a) sequence of forming the joint;

(b) critical dimensions allowing for tolerances. e.g. minimum permissible bearing;

(c) critical details, e.g. accurate location required for a particular reinforcing bars;

(d) method of correcting possible lack of fit in the joint;

(e) details of temporary propping and time when it may be removed;

(f) description of general stability of the structure with details of any necessary temporary bracing;

(g) how far the uncompleted structure may proceed in relation to the completed and matured section;

(h) full details of special materials shall be given;

(i) weld sizes shall be fully specified.

17.3.2 Continuity of Reinforcement

17.3.2.1 General – Where continuity of reinforcement is required through the connection the jointing method used shall be such that the assumption made in analysing the structure and critical sections are realised. The following methods may be used to achieve continuity of reinforcement:

(a) lapping bars;

(b) butt welding;

(c) sleeving;

(d) threading of bars.

The use of jointing methods given in (c) and (d) and any other method not listed shall be verified by test evidence.

17.3.2.2 Sleeving – Three principal types of sleeve jointing may be used, with the approval of the engineer, provided that the strength and deformation characteristics, including behaviour under fatigue conditions, have been determined by tests.

(a) grout or resin filled sleeves capable of transmitting both tensile and compressive forces;

(b) sleeves that mechanically align the square-sawn ends of two bars to allow the transmissions of compressive force only;

(c) sleeves that are mechanically swaged to the bars and are capable of transmitting both tensile and compressive forces.

The detailed design of the sleeve and the method of manufacture and assembly shall be such as ensure that at the ends of the two bars can be accurately aligned into the sleeve. The concrete cover provided for the sleeve shall be not less than that specified for normal reinforcement.

17.3.2.3 Threading – The following methods may be used with the approval of the engineer for joining threaded bars;

(a) the threaded ends of bars may be joined by a coupler having left and right-hand threads. This type of threaded connection requires a high degree of accuracy in manufacture in view of the difficulty of ensuring alignment.

(b) one set of bars may be welded to a steel plate that is drilled to receive the threaded ends of the second set of bars; the second set of bars are fixed to the plate by means of nuts.

(c) threaded anchors may be cast into a pre-cast unit to receive the threaded ends of reinforcement.

Where there is a risk of the threaded connection working loose, e.g. during vibration of in situ concrete, a locking device shall be used.

The structural design of special threaded connections shall be based on tests, including behavior under fatigue conditions. Where tests have shown the strength of the threaded connection to be as per 7.1.3.5, the strength of the joint may be based on 80% of the specified characteristic strength of the joined bars in tension and on 100% for bars in compression divided in each case by the appropriate Y_m factor.

17.3.2.4 Welding of Bars - The design of welded connection shall be in accordance with 7.1.3.

17.3.3 Other Types of Connection – Any other type of connection which can be capable of carrying the ultimate loads acting on it may be used with the approval of the engineer subject to verification by test evidence.

Amongst those suitable for resisting shear and flexure are those made by prestressing across the joint.

Resin adhesives, where tests have shown their acceptability, may be used to form joints subjected to compression but not to resist tension or shear.

For resin mortar joints, the flexural stress in the joints shall be compressive throughout under service load. During the jointing operation at the construction stage, the average compressive stress between the concrete surfaces to be joined shall be checked at serviceability limit state and shall lie between 0.2 N/mm^2 and 0.3 N/mm^2 measured over the total projection of the joint surface (locally not less than 0.15.N/mm^2) and the difference between flexural stresses across the section shall be not more than 0.5 N/mm^2.

For cement mortar joints, the flexural stresses in the joint shall be compressive throughout and not less than 1.5 N/mm^2 under service loads.

17.4 Composite Concrete Constructions

17.4.1 General - The recommendations of 17.4 apply to flexural members consisting of pre-cast concrete units acting in conjunction with added concrete where provision has been made for the transfer of horizontal shear at the contact surface. The precast units may be of either reinforced or prestressed concrete.

In general, the analysis and design of composite concrete structures and members shall be in accordance with clause 15 or 16, modified where appropriate by 17.4.2 and 17.4.3. Particular attention shall be given in the design of both the components parts and the composite section to the effect, on stress and deflections, of the method of construction and whether or not props are used. A check for adequacy shall be made for each stage of construction. The relative stiffnesses of members should be based on the concrete, gross transformed or net, transformed section properties as described in 13.1.2.1; if the concrete strengths in the two components of the composite members differ by more than 10 N/mm^2, allowance for this shall be made in assessing stiffnesses and stresses.

Differential shrinkage of the added concrete and precast concrete members requires consideration in analysis composite members for the serviceability limit states (see 17.4.3.4); it need not be considered for the ultimate limit state.

When precast prestressed units, having pretensioned tendons, are designed as continuous members and continuity is obtained with reinforced concrete cast in situ over the supports, the compressive stresses due to prestress in the ends of the units may be assumed to vary linearly over the transmission length for the tendons in assessing the strength of section.

17.4.2 Ultimate Limit State

17.4.2.1 General – Where the cross-section of composite members and the applied loading increase by stages (e.g. a precast prestressed unit initially supporting self weight and the weight of added concrete and subsequently acting compositely for live loading), the entire load may be assumed to act on the cross-section appropriate to the stage being considered.

17.4.2.2 Vertical Shear - The assessment of the resistance of composite section to vertical shear and the provision of the shear reinforcement shall be in accordance with 15.4.3 for reinforced concrete and 16.4.4 for prestressed concrete (except that in determining the area As, the area of the tendons within the transmission length shall be ignored) modified where appropriate as follows:

(a) for I,T T,T,U and box beam precast prestressed concrete units with an in situ reinforced concrete top slab cast over the precast units (including pseudo box construction), the shear resistance shall be based on either of the following :

(1) the vertical shear force, V, due to ultimate loads may be assumed to be resisted by the precast unit acting alone and the shear resistance assessed in accordance with 16.4.4.

(2) the vertical shear force, V, due to ultimate loads may be assumed to be resisted by the composite section and the shear resistance assessed in accordance with 16.4.4. In this case section properties shall be based on those of the composite section with due allowance for the different grades of concrete where appropriate.

(b) For inverted T beam precast prestressed concrete units with transverse reinforcement placed through standard holes in the bottom of the webs of the units, completely in filled with concrete placed between and over the units to form a solid deck slab, the shear resistance and provision of shear reinforcement shall be based on either of the following:

(1) as in (a) (1) :

(2) the vertical shear force, V , due to ultimate loads may be apportioned between the infill concrete and the precast prestressed units on the basis of cross-sectional area with due allowance for the different grades of concrete where appropriate. The shear resistance for the infill concrete section and the precast prestressed section shall be assessed separately in accordance with 15.4.3 and 16.4.4 respectively.

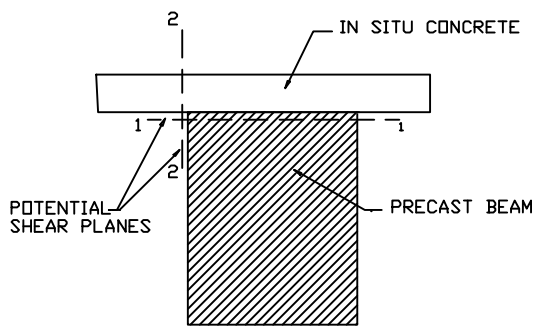

FIG. 16: POTENTIAL SHEAR PLANES

In applying 15.4.3, the breadth of the infill concrete shall be taken as the distance between adjacent precast webs and the depth as the mean depth of infill concrete, or the mean effective depth to the longitudinal reinforcement where this is provided in the infill section.

In applying 16.4.4, the breadth of the precast section shall be taken as the web thickness and the depth as the depth of the precast unit.

(c) in applying 16.4.4.4 d_t shall be derived for the composite section.

17.4.2.3 Longitudinal Shear - The longitudinal shear force, V_1, per unit length of a composite member, whether simply supported or continuous, shall be calculated at the interface of the precast unit and the in situ concrete and at other potential shear planes (see Fig16)by an elastic method using properties of the composite concrete section (see 13.1.2.1) with due allowance for different grades of concrete where appropriate.

V_1 shall not exceed the lesser of the following:

(a) $k_1 f_{ck} L_s$

(b) $0.7 A_e f_y$

where,

k_1 is a constant depending on the concrete bond across the shear plane under consideration, taken as 0.09.

f_{ck} is the characteristic cube strength of concrete.

L_s is the length of the shear plane under consideration:

A_e is the area of fully anchored (see 15.9.6) reinforcement per unit length crossing the shear plane under consideration, but excluding reinforcement required for coexistent bending effects. Shear reinforcement crossing the shear plane and provided to resist vertical shear (see 17.4.2.2) may be included provided it is fully anchored;

f_y is the characteristic strength of the reinforcement.

For composite beam and slab construction a minimum area of fully anchored reinforcement of 0.15% of the area of contact shall cross this surface; the spacing of this reinforcement shall not exceed the lesser of the following:

(a) four times the minimum thickness of the in situ concrete flange;

(b) 600mm

For inverted T beams defined in 17.4.2.2(b) no longitudinal shear strength is required.

17.4.3 Serviceability Limit State –

17.4.3.1 General – In addition to the recommendations given in clauses 15 & 16 concerned with control of cracking the design of composite construction will be affected by 17.4.3.4 and 17.4.3.5 and where precast prestressed units are used also by 17.4.3.2, 17.4.3.3.

17.4.3.2 Compression in the Concrete- For composite members comprising precast prestressed units and in situ concrete the methods of analysis may be as given in 16.4.2. However, where ultimate failure of the composite

unit would occur due to excessive elongation of the steel the maximum concrete compressive stress at the upper surface of the precast unit may be increased above the values given in Table 23 by upto 25%.

17.4.3.3 Tension in the concrete – When the composite member considered in the design comprises prestressed precast concrete units and in situ concrete, and flexural tensile stresses are induced in the in situ concrete by sagging moments due to imposed service loading, the tensile stresses in the in situ concrete at the contact surface shall be limited to the value given in Table 28.

TABLE 28: FLEXURAL TENSILE STRESSES IN-SITU CONCRETE (Clause 17.4.3.3.)

Grade of in-situ concrete	M25	M30	M40	M50
Maximum Tensile Stress (N/mm^2)	3.2	3.6	4.4	5.0

When the in situ concrete is not in direct contact with a prestressed precast unit the flexural tensile stresses in the in situ concrete shall be limited by cracking considerations in accordance with 15.9.8.2.

Where continuity is obtained with reinforced concrete cast in situ over the supports, the flexural tensile stresses or the hypothetical tensile stresses in the prestressed precast units at the supports shall be limited in accordance with 16.4.2.4.

17.4.3.4 Differential Shrinkage- The effect of differential shrinkage shall be considered for composite concrete construction where there is a difference between the age and the quality of concrete in components. Differential shrinkage may lead to increase stresses in the composite section and these shall be investigated. The effect of differential shrinkage are likely to be more severe when the precast unit is of reinforce concrete or of prestressed concrete with an approximately triangular distribution of stresses due to prestress. The stress resulting from the effects of differential shrinkage may be neglected in inverted T beams with a solid infill deck, provided that the difference in concrete strengths between the precast and infill components is not more than 10 N/mm^2. For other forms of composite constructions, the effects of differential shrinkage shall be considered in design.

In computing the tensile stresses, a value will be required for the differential shrinkage strain (the difference in the free strain between the two components of the composite member), the magnitude of which will depend on a great many variables.

For bridges in a normal environment and in the absence of more exact data, the value of shrinkage strain given in 5.2.3 shall be used to compute stresses in composite construction.

The effects of differential shrinkage will be reduced by creep and the reduction coefficient may be taken as 0.43.

17.4.3.5. Continuity in the Composite Construction – When continuity is obtained in composite construction by providing reinforcement over the supports, considerations shall be given to the secondary effects of differential shrinkage and creep on the moments in continuous beams and on the reactions at the supports.

The hogging restraint moment, Mcs, at an internal support of a continuous section due to differential shrinkage shall be taken as :

$$M_{cs}=\varepsilon_{diff}E_{cf}A_{cf}a_{cent}\phi \quad \text{....(equation-33)}$$

where,

ε_{diff} is the differential shrinkage strain;

E_{cf} is the modulus of the elasticity of flange concrete;

A_{cf} is the area of the effective concrete flange;

a_{cent} is the distance of the centroid of the concrete flange from the centroid of the composite section;

ϕ is a reduction co-efficient to allow for creep taken as 0.43.

The restraint moment, M_{cs}, will be modified with time by creep due to dead load and creep due to any prestressed in the precast unit. The resultant moment due to prestressed may be taken as the restraint moment which would have been set up if composite section as a whole had been prestressed, multiplied by a creep coefficient ϕ taken as 0.87.

The expression given in the preceding paragraphs for calculating the restraint moments due to creep and differential shrinkage are based on an assumed value of 2.0 for the ratio, β_{cc} , of total creep to elastic deformation. If the design conditions are such that this value is significantly low, then the engineer shall calculate values for the reduction co-efficients from the expressions: -

$$\phi = \{1 - e^{-\beta_{cc}}\}/\beta_{cc} \quad \text{....(equation 34)}$$

$$\phi_1 = \{1 - e^{-\beta_{cc}}\} \quad \text{....(equation 35)}$$

where e is the base of Napierian logarithms.

18 LOAD TESTING

18.1 Load Tests on individual Precast Units

18.1.1 General – The load tests described in this clause are intended as checks on the quality of the units and should not be used as a substitute for normal design procedures. Where members require special testing, such special testing procedures should be in accordance with the specification. Test loads are to be applied and removed incrementally.

18.1.2 Non-destructive Test – The unit should be supported at its designed points of support and loaded for 5 min. with a load equal to the sum of the characteristic dead load plus 1.25 times the characteristic imposed load. The deflection should then be recorded. The maximum deflection measured after application of the load should be in accordance with the requirements that should be defined by the engineer.

The recovery should be measured 5 min. after the removal of the applied load and the load then reimposed. The percentage recovery after the second loading should be not less than that after the first loading nor less than 90% of the deflection recorded during the second loading. At no time during the test should the unit show any sign of weakness or faulty construction as defined by the engineer in the light of reasonable interpretation of relevant data.

18.1.3 Special Test – For very large units, or units not readily amenable to tests (such as columns, the precast parts of composite beams and members designed for continuity or fixity) the testing arrangements should be agreed before such units are cast.

18.2 Load Test of Structures or Parts of Structures

18.2.1 General- The tests described in this clause are intended as a check on structures other than covered by 18.1 where there is doubt regarding serviceability or strength.

18.2.2 Age at Test - The test should be carried out as soon as possible after the expiry of 28 days from the time of placing the concrete. When the test is for a reason other than the quality of the concrete in the structure being in doubt, the test may be carried out earlier provided that the concrete has already reached its specified characteristic strength.

When testing prestressed concrete, allowance should be made for the effect of prestress at the time of testing being above its final value.

18.2.3 Test Loads – The test loads to be applied for the limit states of deflection and local damage are the appropriate design loads, i.e. the characteristic dead and imposed loads. When the ultimate limit state is being considered, the test load should be equal to the sum of the characteristic dead load plus 1.25 times the characteristic imposed load and should be maintained for a period of 24 h. If any of the final dead load is not in position on the structure, compensating loads should be added as necessary.

During the tests, struts and bracing strong enough to support the whole load should be placed in position leaving a gap under the members to be tested and adequate precautions should be taken to safeguard persons in the vicinity of the structure.

18.2.4 Measurements during the Tests – Measurements of deflection and crack width should be taken immediately after the application of load and in the case of the 24 h sustained load test at the end of the 24 h loaded period after removal of the load and after the 24 h recovery period. Sufficient measurements should be taken to enable side effects to be taken into account. Temperature and weather conditions should be recorded during the test.

18.2.5 Assessment of Results – In assessing the serviceability of a structure or part of a structure following a loading test, the possible effects of variation in temperature and humidity during the period of the

test should be considered.

The following recommendations should be met.

18.2.5.1 For reinforced concrete structures, the maximum width of any crack measured immediately on application of the test load for local damage should not be more than two-thirds of the value for the limit state requirement given in 10.2.1. For prestressed concrete structures, no visible cracks should occur under the test load for local damage.

18.2.5.2 For members spanning between two supports, the deflection measure immediately after application of the test load for deflections should be not more than 1/500 of the effective span. Limits should be agreed before testing cantilever portions of structures.

18.2.5.3 If the maximum deflection (in millimeters) shown during the 24 h under load is less than 40 L^2/h where L is the effective span (in metres) and h is the overall depth of construction in (millimeters), it is not necessary for the recovery to be measured and 18.2.5.4 and 18.2.5.5 do not apply.

18.2.5.4 If ,within 24 h of the removal of the test load for the ultimate limit state as calculated in 18.2.3 a reinforced concrete structure does not show a recovery of at least 75% of the maximum deflection shown during the 24 h under load. The loading should be repeated the structure should be considered to have failed to pass the test if the recovery after the second loading is not at least 75% of the maximum deflection shown during the second loading.

18.2.5.5 If ,within 24 h of the removal of the test load for the ultimate limit state as calculated in 18.2.3 a prestressed concrete structures does not a recovery of at least 85% of the maximum deflection shown during the 24 h under load. The loading should be repeated. The structure should be considered to have failed to pass the test if the recovery after the second loading is not at least 85% of the maximum deflection shown during the second loading.

18.3 Non-destructive Tests (NDT)

Additional non destructive tests on the hardened concrete in the structure as a whole or any finished part of the structure where necessary may be carried out to as certain its integrity of strength. Details of few non-destructive techniques are given in Appendix-F.

Appendix-A
(CLAUSE 8.5.3)
SPECIFICATION FOR CONSTRUCTION JOINTS

A-1 Construction Joints

A-1.1 The Position of Construction Joints

A-1.1.1 Construction joints should be positioned to minimise the effect of the discontinuity on the durability, structural integrity and appearance of the structure.

A-1.1.2 As far as possible, joints should be positioned in non-aggressive zones, but if aggressive zones cannot be avoided, joints should be sealed.

A-1.1.3 Joints should be positioned where they are readily accessible for preparation and concreting, the preparation of the joints is more likely to be satisfactory where the cross section is relatively small and where reinforcement is not congested.

A-1.1.4 As far as possible, joints for fairfaced concrete should be located where they conform with the architectural features of the construction. Unless they are masked in this way, the position of the joints are always obvious, even when the concrete is given a textured finish.

A-1.1.5 If substantial changes in the cross section of a member are necessary, the joints should be formed where they minimise stresses caused by temperature gradients and shrinkage.

A-1.1.6 Joints should be located away from regions of maximum stress caused by loading, particularly where shear and bond stress are high. Construction joints between slabs and ribs in composite beam should be avoided. As a general rule, joints in column are made as near as possible to the beam hunching, joints in beams and slabs should normally be made at the centre or within the middle third of the span.

A-1.2 Preparing the surface of the Joint

A-1.2.1 The minimum number of joints should be used and their construction should be simple. They should be either horizontal or vertical, because concreting sloping surfaces are usually unsatisfactory.

A-1.2.2 Where concrete is placed in vertical members e.g. walls, columns and the like, the lift of concrete shall finish level or at right angles to the axis of the member, the joint line matching the features of the finished work. Concreting shall be carried out continuously upto the construction joint.

A-1.2.3 Laitance, both on the horizontal and vertical surfaces of the concrete, should be removed before fresh concrete is cast. The surface should be roughened to promote good adhesion. Various methods for removal can be used but they should not dislodge the coarse aggregate particles. Concrete may be brushed with a stiff brush soon after casting while the concrete is still fresh, and while it has only slightly stiffened.

A-1.2.4 If the concrete has partially hardened, it may be treated by wire brushing or with a high pressure water jet, followed by drying with an air jet, immediately before the new concrete is placed.

A-1.2.5 Fully hardened concrete should be treated with mechanical hand tools or grill blasting, taking care not to split or crack aggregate particles.

A-1.2.6 The best time for treating the joint is a matter of judgment because it depends on the rate of setting and hardening (which is itself dependent on the temperature of the concrete). Before further concrete is cast, the surface should be thoroughly cleaned to remove debris and accumulated rubbish, one effective method, being air jet.

A-1.2.7 Where there is likely to be a delay before placing the next concrete lift, protruding reinforcement should be protected. Before the next lift is placed, rust, loose mortar or other contamination should be removed from the bars and where conditions are particularly aggressive and there has been a substantial delay between lifts, the concrete should be cut back to expose the bars for a length of about 50mm to ensure that contaminated concrete is removed.

A-1.2.8 In all cases, when construction joints are made, to essential it is ensure that the joint surface is not

contaminated with release agents, dust or curing membrane, and that the reinforcement is fixed firmly in position at the correct cover.

A-1.3 Concreting at Construction Joints

A-1.3.1 When the form work is fixed for the next lift, it should be inspected to ensure that no leakage can occur from the fresh concrete. It is a good practice to fix a 6mm thick sponge which seals the gap completely.

A-1.3.2 The practice of first placing a layer of mortar or grout is not recommended. The old surface should be soaked with water without leaving puddles, immediately before starting concreting,; then the new concrete should be thoroughly compacted against it. When fresh concrete is cast against existing mature concrete or masonary, the older surfaces should be thoroughly cleaned and soaked to prevent the absorption of water from the new concrete. Standing water should be removed shortly before the new concrete is placed and the new concrete should be thoroughly vibrated in the region of the joint.

Appendix-B
(CLAUSE 7.2.6.4.2.4)
TESTS ON SHEATHING DUCTS

B-1 All tests specified below shall be carried out on the same sample in the order given below.

B-2 At least 3 samples for one lot supply (not exceeding 7000m length) shall be tested.

B-3 The tests are applicable for sheathing transported to site in straight lengths where the prestressing tendon is threaded inside the sheathing prior to concreting. These tests are not applicable for sheathing and cable coiled and transported to site as an assembled unit, nor for sheathing ducts placed in position without threading of prestressing cable prior to concreting.

B-4 WORKABILITY TESTS – A test sample of 1100 mm long is soldered to a fixed base plate with a soft solder (Fig. B1). The sample is then bent to a radius of 1800mm alternatively on either side to complete 3 cycles. Thereafter, the sealing joints will be visually inspected to verify that no failure or opening has taken place.

B-5 TRANSVERSE LOAD RATING TEST - The test ensures that stiffness of the sheathing is sufficient to prevent permanent distortion during site handling.

B-5.1 The sample is placed on a horizontal support 500mm long so that the sample is supported at all points of outward corrugations. A load as specified in Table B1 is applied gradually in increments at the centre of the supported portion through a circular contact surface of 12mm dia. Couplers shall be placed so that the load is applied approximately at the centre of two corrugations (Fig. B-2).

The sample is considered acceptable if the permanent deformation is less than 5 percent.

B-6 TENSION LOAD TEST- The test specimen is subjected to a tensile load. The hollow core is filled with a wooden circular piece having a diameter of 95 percent of the inner diameter of the sample to ensure circular profile during test loading (Fig. B-3). A coupler is screwed on and the sample is loaded in increments, till load specified in Table B-2. If no deformation of the joints nor slippage of couplers is noticed, the test shall be considered satisfactory.

B-7 Water Loss Test – The sample is sealed at one end. It is then filled with water. After the other end is also sealed as shown in Fig. B-4, it is connected to a system capable of applying a pressure of 0.05N/mm^2 and kept constant for 5 minutes. The same is acceptable if the loss of water does not exceed 1.5 percent of the volume.

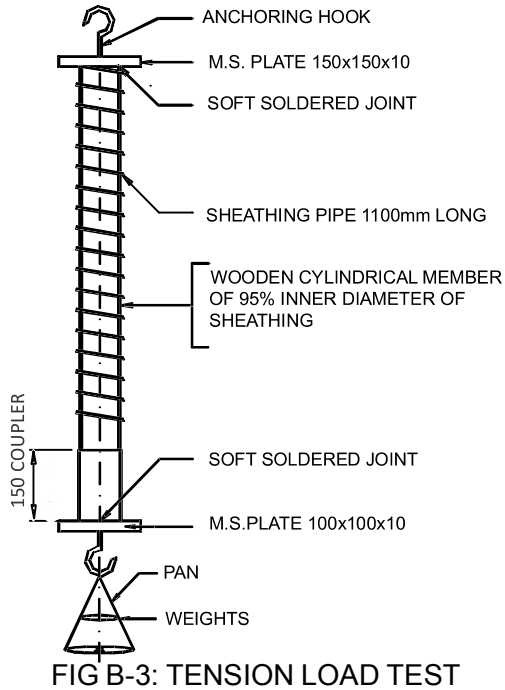

FIG B-3: TENSION LOAD TEST

B-7.1 For working out the volume, another sample 500mm long is sealed at one end and the volume of hollow space is arrived at by pouring water from a measuring cylinder. The computation of relative profile volume is worked out as follows :-

$$\text{Relative Profile Volume} = \frac{V_P - \pi\phi^2 L/4}{\pi\phi L} cm^3/cm$$

L - Length of the specimen
ϕ - nominal internal diameter of the sheathing
V_a - premeasured quantity of water in a measuring cylinder.
V_b - balance quantity of water left in the cylinder after completely filing of the test sample.

Actual volume $V_p = V_a - V_b$

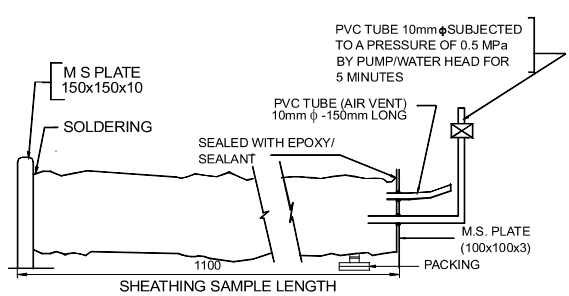

FIGURE B-4 : TEST FOR WATER LOSS STUDY

TABLE B-1: TENSION LOAD TEST
(Clause B-5)

DIAMETER OF SHEATHING(d) (mm)	**LOAD(F) (N)**	
	For MS Sheathing	**For HDPE sheathing**
25< d<35	250	600
35<d<45	400	750
45<d<55	500	750
55<d<65	600	950
65<d<75	700	950
75<d<85	800	950
85<d< 90	1000	1050

TABLE B-2: TENSION LOAD TEST
(Clause B-5)

DIAMETER OF SHEATHING(d) (mm)	**LOAD(F) (N)**	
	For MS Sheathing	**For HDPE sheathing**
25< d<35	300	400
35<d<45	500	600
45<d<55	800	900
55<d<65	1100	1100
65<d<75	1400	1400
75<d<85	1600	1600
85<d< 90	1800	1900

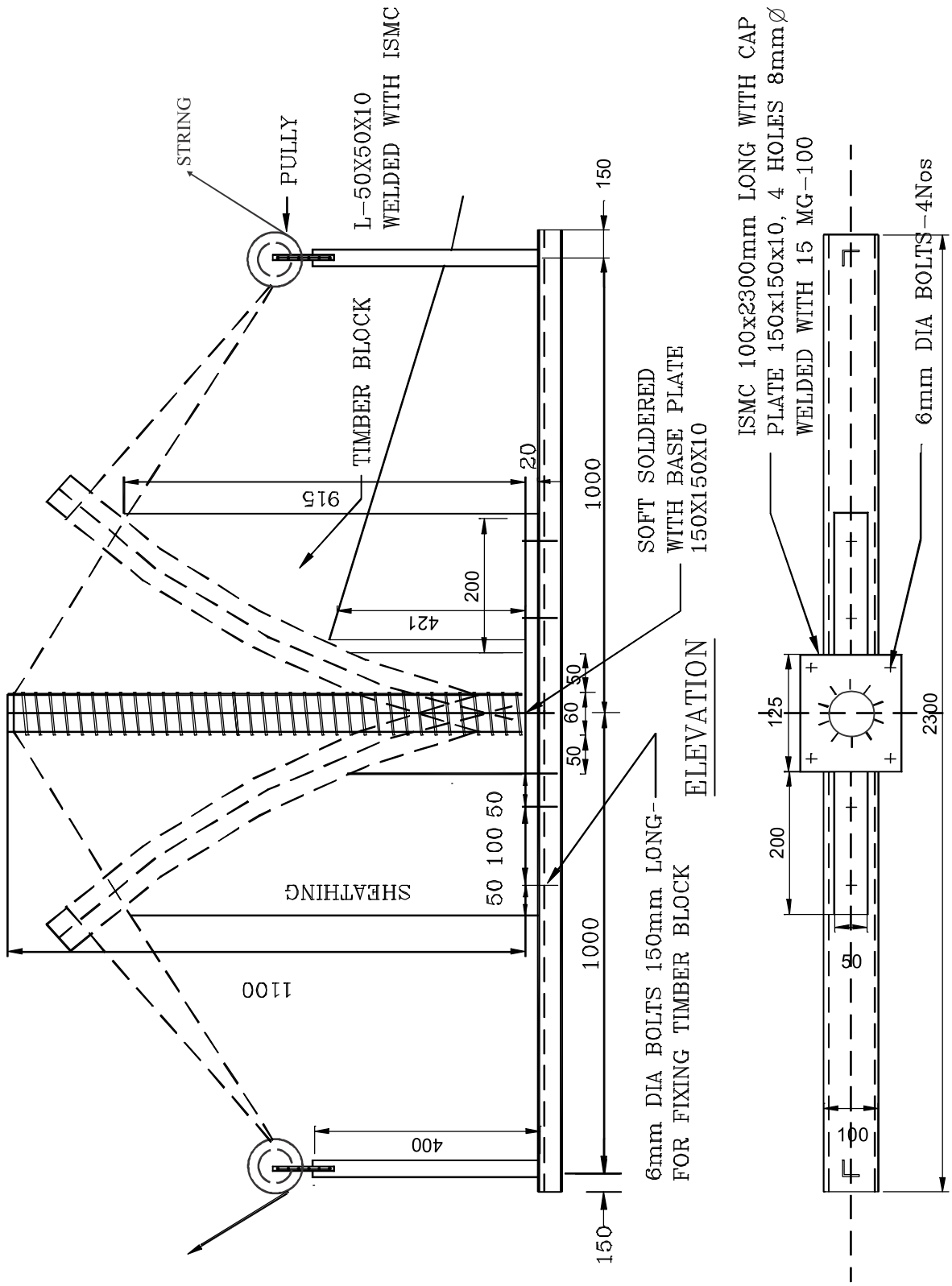

FIG. B-1 WORKABILITY TEST

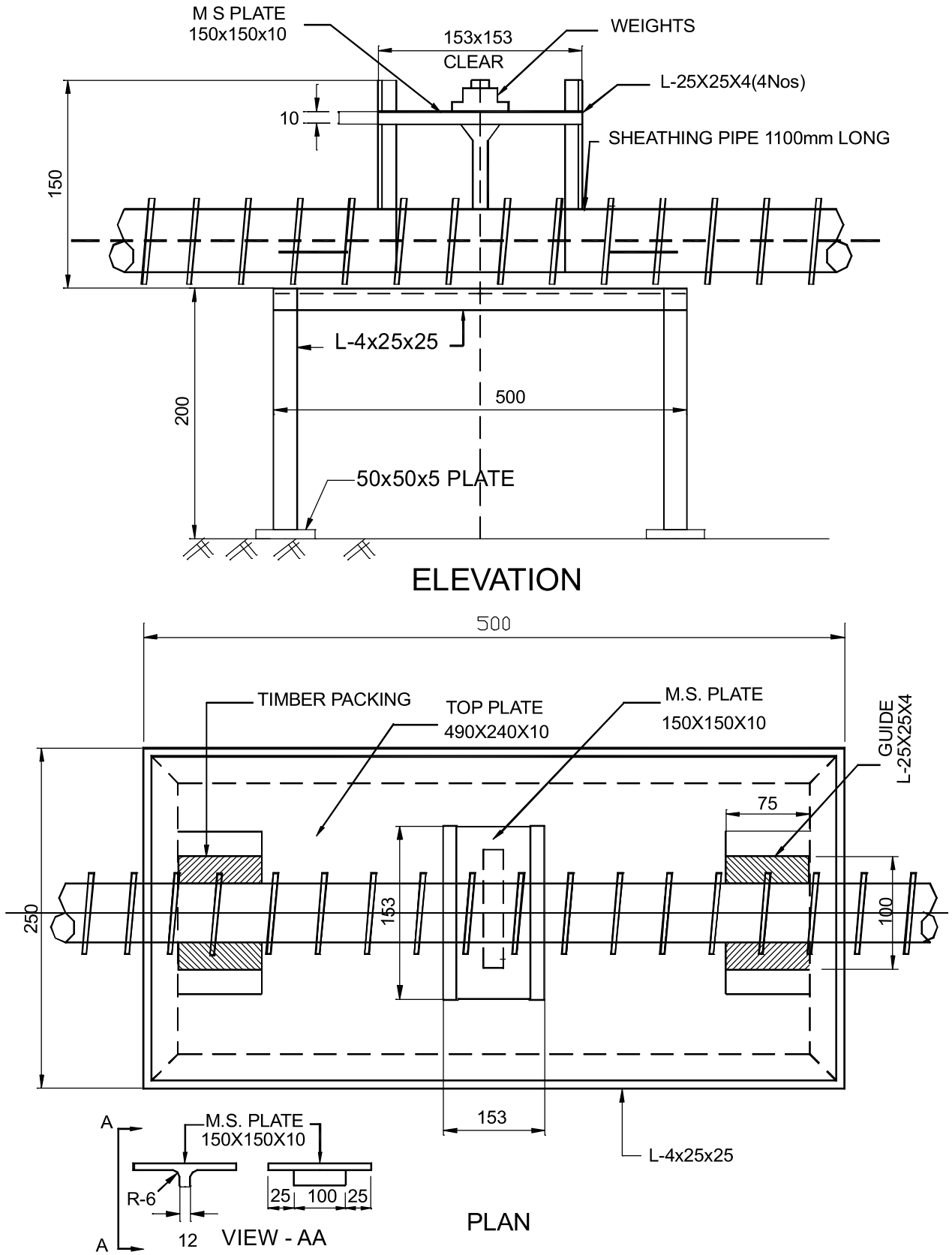

FIG. B-2 TRANSVERSE LOAD RATING TEST

Appendix-B I
(Clause 7.2.6.4.2)
ADDITIONAL TESTS FOR CORRUGATED HDPE SHEATHING

Apart from tests specified in Appendix-B, additional acceptance tests for the prestressing systems employing corrugated HDPE sheathing shall cover the following two tests:

B1-1 BOND TEST

B1-1.1 Objective: To establish satisfactory bond characteristics between the tendon and concrete, in the ultimate condition.

B1-1.2 Equipment

1. 3 nos. similar reinforced concrete beams with a HDPE sheathing of length equal to 40 times the sheathing diameter.

2. Prestressing tendon of adequate length for stressing and for embedding in the beam.

3. Tendon anchorage system

4. Load cells and meters

5. Grout constituents

B1-1.3 Methods: Cast an adequately reinforced beam to withstand the prestressing operation and of length to embed 40 times the dia. of sheathing to suit the tendon to be adopted. Introduce the strands of the tendon by spacing them parallel by means of ply spacers as shown in Fig. B1-1 and fill the sheathing with grout of strength not less than 27N/mm^2. When the grout has attained the necessary strength, stress the tendon slowly increasing the load to the failure capacity. The failure capacity of the bond shall be at least equal to the anchorage efficiency or 0.95 of failure capacity of the tendon. At least 3 nos. of tests shall be carried out to ascertain the adequacy of the sheathing.

B1-2 COMPRESSION TEST FOR THE LOSS OF WALL THICKNESS

B1-2.1 Objective: To establish the wear and tear of the sheathing material and the rigidity of sheathing surface against indentation and abrasion under concentrated line loading from the tendon constituents.

B1-2.2 Equipment

1. 3 nos. of concrete blocks.

2. 1 no. of 1000mm long strand forming the tendon.

3. A 3 MN press.

4. A loading beam of 300mm length of transmit 5KN load.

5. A rubber pad for placing between the press and the beam for uniform and constant load transfer.

6. A bearing plate with a mono strand jack to pull and strand under loaded condition.

7. A digital caliper.

B1 2-3 Method: Cast 3 nos. of concrete cubes of 300 mm size, of the same strength as of main structure, with half cut HDPE sheathing embedded in it at the top as shown in Fig. B1-2. Care shall be exercised to ensure that the sheathing surface has uniform contact with concrete all around. Place the concrete block over the press with a 1000mm length of strand forming the tendon placed in the sheathing and apply 5 kN uniform load gradually as shown in Fig. B1-2. Pull the strand under the stressed condition by 200mm across the sheathing. Repeat the test on all the 3 nos. of sheathings so embedded. Measure the indentations formed in all the 3 nos. of sheathings along the length of the strand, by means of digital caliper. The residual thickness of the sheathing shall not be less than 1.5mm.

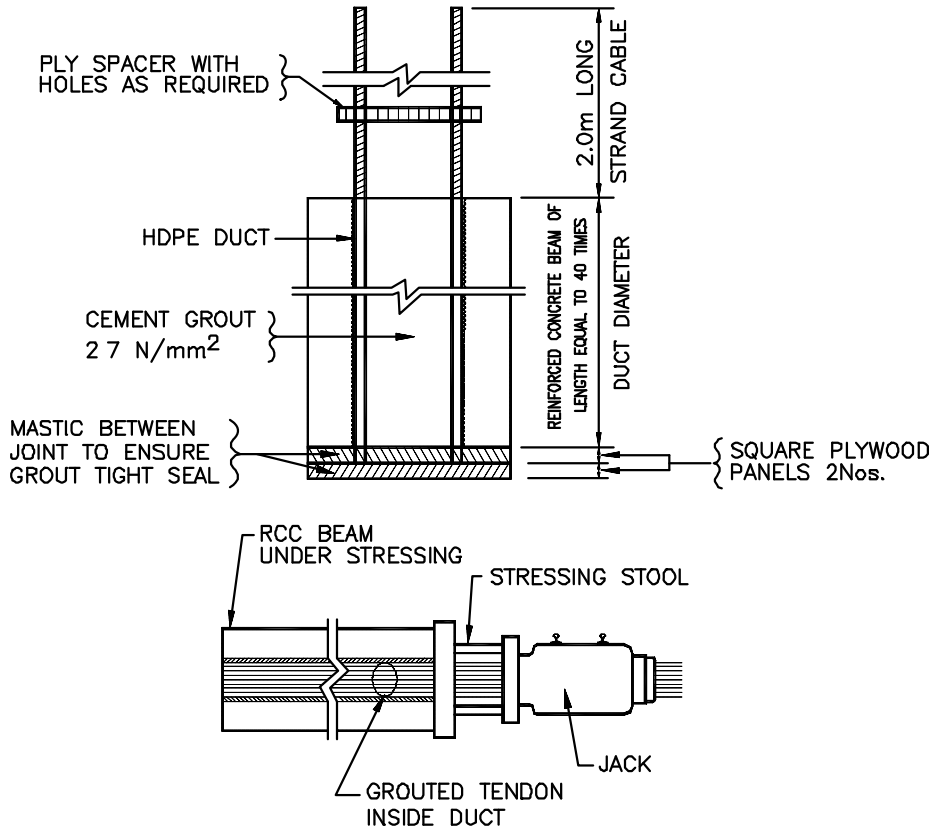

Fig. B1-1 BOND TEST

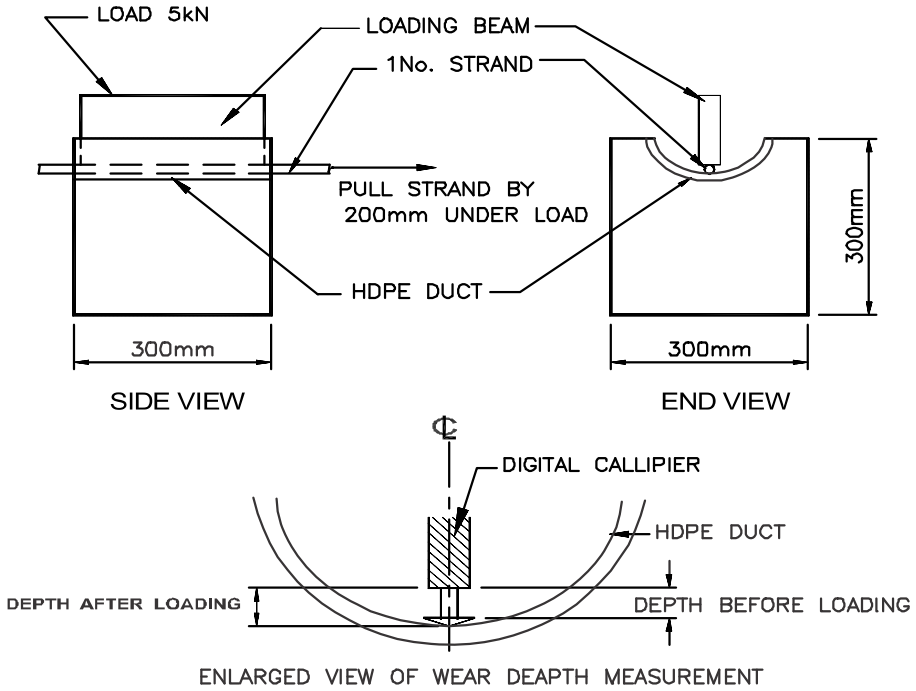

Fig B1-2 COMPRESSION TEST

Appendix-C
(Clause 7.2.6.4.2.5.)
SPECIFICATION FOR SHEATHING DUCT JOINT

C-1 The sheathing ducts shall be of the spiral corrugated type. For major projects the sheathing ducts should preferably be manufactured at the project site using appropriate machines. With such arrangement, long sheaths may be used with consequent reduction in the number of joints and couplers.

C-2 Where sheathing duct joints are unavoidable, such joints shall be made cement slurry tight by the use of corrugated threaded sleeve couplers which can be tightly screwed on to the outside of the sheathing ducts. A heatshrink coupler could also be used if suitable.

C-3 Typical details of a sleeve coupler is shown in Fig. C1. The length of the coupler should not be less than 150 mm but should be increased upto 200 mm wherever practicable. The joints between the ends of the coupler and the duct shall be sealed with adhesive sealing tape to prevent penetration of cement slurry during concreting. While jointing the coupler, the overlap on either side should be kept equal and joint of the coupler should be taped properly with PVC tape of atleast 5 cms on either side. The couplers of adjacent ducts should be staggered wherever practicable. As far as possible, couplers should not be located in curved zones. The corrugated sleeve couplers are being conveniently manufactured using the sheath making machine with the next higher size of die set.

C-4 The heatshrink coupler shown in Fig.C-2 is supplied in the form of bandage rolls which can be used for all diameters of sheathing ducts. The bandage is coated on the underside with a heat sensitive adhesive so that after heating, the bandage material shrinks on to the sheathing duct and ensures the formation of a leakproof joint without the need for extra taping support in the form of corrugated sleeve couplers. The heating is effected by means of a soft gas flame.

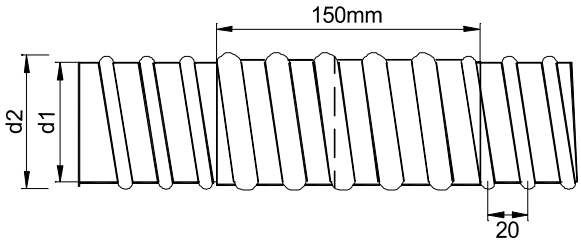

FIG. C-1 DETAIL OF A SLEEVE COUPLER

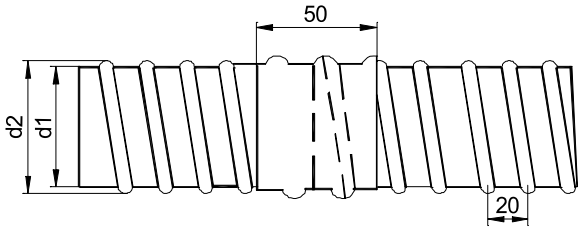

FIG. C-2 HEAT-SHRINK COUPLER

APPENDIX – D
(Clause 9.0)
RECOMMENDED PRACTICE FOR GROUTING OF CABLES IN PRESTRESSED CONCRETE BRIDGES

D-1 GENERAL

D-1.1 The recommendations cover the cement grouting of post tensioned tendons of prestressed concrete members of bridges. This also covers some of the essential protective measures to be adopted for minimising corrosion in PSC bridges.

D-1.2 The purpose of grouting is to provide permanent protection to the post tensioned steel against corrosion and to develop bond between the prestressing steel and the surrounding structural concrete. The grout ensures encasement of steel in an alkaline environment for corrosion protection and by filling the duct space, it prevents water collection and freezing.

D-2 MATERIALS

D-2.1 Water- Water free from impurities conforming to 4.3 of this code shall only be permitted.

D-2.2 Cement- Ordinary Portland Cement should be used for preparation of the grout. It should be as fresh as possible and free from any lumps. Pozzalana cement shall not be used.

D-2.3 Sand- It is not recommended to use sand for grouting of prestressing tendons. In case the internal diameter of the ducts exceed 150mm, use of sand may be considered. Sand, if used, shall conform to IS:383. The weight of sand in the grout shall not be more than 10 percent of weight of cement, unless proper workability can be ensured by addition of suitable plasticizers.

D-2.4 Admixture - Acceptable admixtures conforming to IS:9103 and 4.4 of this code may be used with the approval of the engineer- in- charge, if tests have shown that their use improves the properties of grout, i.e. increasing fluidity, reducing bleeding entraining air or expanding the grout. Admixtures must not contain chlorides, nitrates, sulphides, sulphates or any other products which are likely to damage the steel or grout. When an expanding agent is used, the total unrestrained expansion should preferably be between 4 to 6%. Aluminium powder as an expanding agent is not recommended for grouting because its long term effects are not free from doubt.

D-3 GROUT OPENINGS OR VENTS

D-3.1 All ducts should have grout opening at both ends. For this purpose special openings should be provided where such openings are not available at end anchorages. For draped (curved)cables crown points should have a grout vent. For draped cables longer than 50m grout vents or drain holes may be provided at or near the lowest points. All grout openings or vents should include provisions for preventing grout leakage.

D-3.2 Standard details of fixing couplers, inlets, outlets and air vents to the duct anchorage shall be followed as recommended by the supplier of the system of prestressing.

D-3.3 Ducts should be securely fastened at close intervals. All unintended holes or openings in the duct must be repaired prior to concrete placing. The joints of the couplers and the sheathing should be made water proof by use of tape or similar suitable system capable of giving leak proof joints. Grout openings and vents must be securely anchored to the duct and to either the forms or to reinforcing steel to prevent displacement during concreting operations due to weight, buoyancy and vibrations.

D-3.4 Ducts require very careful handling as, being of thin metal, they are susceptible to leakage due to corrosion in transit or storage, by tearing/ripping in handling particularly when placed adjoining to reinforcement steel, by pulling apart of joints while inserting tendons, prior to concreting, or by accidental puncturing while drilling for form ties/inserts. Ducts are also liable to damage by rough use of internal vibrator and sparks from welding being done close by.

D-4 EQUIPMENT

D-4.1 Grout Agitator - It is essential that the grout is maintained in a homogenous state and of uniform consistency so that there is no separation of cement. It is therefore, necessary that the grout be continuously agitated

by a suitable mixer with a minimum speed of 1000 RPM and travel of discharge not exceeding 15m per second.

D-4.2 Grout Pump - The pump should be a positive displacement type and should be capable of injecting the grout in a continuous operation and not by way of pulses. The grout pump must be fitted with a pressure gauge to enable pressure of injection to be controlled. The minimum pressure at which grout should be pumped shall be 0.3Mpa and the grout pump must have a relief arrangement for bypass of the grout in case of build up of pressure beyond 1 MPa. The capacity of the grout pump should be such as to achieve a forward speed of grout of around 5 to 10 metres per minute. The slower rates are preferable as they reduce the possibility of occurrence of voids. If the capacity of the pump is large, it is usual to grout two or more cables simultaneously through a common manifold.

Use of hand pumps for grouting is not recommended. Use of compressed air operated equipment for injection is prohibited as it is likely that there will be some air entrapped in grout.

D-4.3 Water Pump – Before commencement of grouting, a stand by direct feed high pressure water pump should be available at site for an emergency. In case of any problem in grouting the ducts, such pump shall immediately be connected to the duct and all grout flushed by use of high pressure flushing. It is, therefore, necessary to have adequate storage of clean potable water for operation of the water pump for such emergencies.

D-4.4 Grout Screen – The grouting equipment should contain a screen having a mesh size of 100µm (150µm if sand is used). Prior to introduction into the grout pump, the grout should be passed through such screen. This screen should be easily accessible for inspection and cleaning.

D-4.5 Connections and Air Vents Standard details of fixing inlets and air vents to the sheathing and/or anchorage should be followed as recommended by specialist supplier of the system of prestressing. In general, all connections are to be of the "Quick Couple" type and at change of diameters, suitable reducers are to be provided.

D-5 Properties of the Grout

D-5.1 Water/cement ratio should be as low as possible, consistent with workability. This ratio should not normally exceed 0.45.

D-5.2 Before grouting, the properties of the grout mix should be tested in a laboratory depending on the facilities available. Tests should be conducted for each job periodically. The recommended test is described below.

D-5.3 Compressive Strength.- The compressive strength of 100 mm cubes of the grout shall not be less than 17 N/mm^2 at 7 days. Cubes shall be cured in a moist atmosphere for the first 24 hrs. and subsequently in water. These tests shall be conducted in advance to ascertain the suitability of the grout mix.

D-5.4 Cement – Which shall normally be ordinary Portland cement and shall be less than one month old. The cement shall be stored in dry place. When used, its temperature shall not exceed 40° C unless special precautions are taken.

D-6 MIXING OF GROUT

D-6.1 Proportions of materials should be based on field trials made on the grout before commencement of grouting, but subject to the limits specified above. The materials should be measured by weight.

D-6.2 Water should be added to the mixer first, followed by cement and sand, if used. Admixture if any, may be added as recommended by the manufacturer.

D-6.3 Mixing time depends upon the type of the mixer but will normally be between 2 & 3 minutes. However, mixing should be for such a duration as to obtain uniform and thoroughly blended grout without excessive temperature increase or loss of expansive properties of the admixtures. The grout should be continuously agitated until it is injected.

D-6.4 Once mixed, no water shall be added to the grout to increase its fluidity.

D-6.5 Hand mixing is not permitted.

D-7 GROUTING OPERATIONS

D-7.1 General

D-7.1.1 Grouting shall be carried out as early as possible but not later than one week of stressing a tendon. Whenever this stipulation cannot be complied with for unavoidable reasons, adequate temporary protection of the steel against corrosion by methods or products which will not impair the ultimate adherence of the injected grout should be ensured

till grouting. The sealing of the anchorage ends after concreting is considered to be a good practice to prevent ingress of water. For structures in aggressive environment, sealing of the anchorage ends is mandatory.

NOTES :

1. Application of some patented water soluble oils for coating of steel/VPI powder injections/ sending in of hot, dry and oilfree compressed ir throughthe vents at frequent intervals have shown some good results.

2. Some of the methods recommended for sealing of anchorages are to seal the openings with bitumen impregnated gunny bag or water proof paper or by building a brick pedestal plastered on all faces enclosing the exposed wires outside the anchorages.

D-7.1.2 Any traces of oil if applied to steel for preventing corrosion should be removed before grouting operation.

D-7.1.3 Ducts shall be flushed with water for cleaning as well as for wetting the surfaces of the duct walls. Water used for flushing should be of the same quality as used for grouting. It may, however, contain about 1 per cent of slaked lime or quick lime. All water should be drained through the lowest drain pipe or by blowing compressed air through the duct.

D-7.1.4 The water in the duct should be blown out with oil free compressed air. Blowing out water from duct for cables longer than 50m draped up at both ends by compressed air may not be effective; outlet/vent provided at or near the lowest point shall be used to drain out water from duct.

D-7.1.5 The connection between the nozzle of the injection pipe and duct should be such that air cannot be sucked in.

D-7.1.6 All outlet points including vent openings should be kept open prior to the commencement of injection of grout.

D-7.1.7 Before grouting, all air in the pump and hose should be expelled. The suction circuit of the pump should be airtight.

D-7.2 Injection of Grout

D-7.2.1 After mixing, the grout should be kept in continuous movement.

D-7.2.2 Injection of grout must be continuous and should not be interrupted.

D-7.2.3 The method of injection should ensure complete filling of the ducts. To verify this, it is advisable to compare the volume of the space to be filled by injected grout with the quantity to grout actually. Also, the bypass system indicated in D-4.3 above is essential for further safety.

D-7.2.4 Grouting should be commenced initially with a low pressure of injection of upto 0.3 N/mm^2 increasing it until the grout comes out at the other end. The grout should be allowed to flow freely from the other end until consistency of the grout at this end is the same as that of the grout at the injection end. When the grout flows at the other end, it should be closed off and build up of pressure commenced. Full injection pressure at about 0.5 N/mm^2 shall be maintained for atleast one minute before closing the injection pipe. It is a recommended practice to provide a stand pipe at the highest point of the tendon profile to hold all water displaced by sedimentation or bleeding. If there is a build up of pressure much in excess of 1 N/mm^2 without flow of grout coming at the other end, the grouting operation should be discontinued and the entire duct flushed with high water pressure.

D-7.2.5 Grout not used within 30 minutes of mixing should be rejected.

D-7.2.6 Disconnection is facilitated if a short length of flexible tube connects the duct and injection pipe. This can be squeezed and cut off after the grout has hardened.

D-8 PRECAUTIONS & RECOMMENDATIONS FOR EFFECTIVE GROUTING

D-8.1 When the ambient temperature during the day is likely to exceed 40° C, grouting should be done in the early morning or late evening hours.

D-8.2 When the cables are threaded after concreting, the duct must be temporarily protected during concreting by inserting a stiff rod or a rigid PVC pipe or any other suitable method.

D-8.3 During concreting care shall be taken to ensure that the Sheathing is not damaged. Needle vibrators shall be used with extreme care by well experienced staff only to ensure the above requirements.

D-8.4 It is a good practice to move the cables in both

directions during the concreting operations. This can easily be done by light hammering the ends of the wires/strands during concreting. It is also advisable that 3 to 4 hours after concreting the cable should be moved both ways through a distance of about 20 cms. With such movement, any leakage of mortar which has taken place in spite of all precautions loses bond with the cables, thus reducing the chance of blockages. This operation can also be done by fixing prestressing jacks at one end, pulling the entire cable and then repeating the operations by fixing the jack at the other end. Compressed air should also be pumped to clear leaked mortar plug.

D-8.5 In case of stage prestressing, cables tensioned in the first stage should not remain ungrouted till all cables are stressed. It is a good practice while grouting any duct in stage prestressing, to keep all the remaining ducts filled up with water containing 1 per cent lime or by running water through such ducts till the grout has set. After grouting the particular cable, the water in other cables should be drained and removed with compressed air to prevent corrosion.

D-8.6 Care should be taken to avoid leaks from one duct to another at joints of precast members.

D-8.7 End faces where anchorages are located are vulnerable points of entry of water. They have to be necessarily protected with an effective barrier. Recesses should be packed with mortar/concrete and should preferably be painted with water proof paint.

D-8.8 After grouting is completed, the projecting portion of vents should be cut off and the face protected to prevent corrosion.

APPENDIX-E
(Clause 16.9.2.3.1 & 16.9.3.3.2)
COVER & SPACING OF CURVED DUCTS FOR PRESTRESSED CONCRETE.

E-1 GENERAL - Where curved tendons are used in post tensioning, the positioning of the tendon ducts and the sequence of tensioning should be such as to prevent :

a) bursting of the side cover perpendicular to the plane of curvature of ducts;

b) bursting of the cover in the plane of curvature of the ducts.

c) crushing of the concrete separating tendons in the same plane of curvature.

E-2 COVER - In order to prevent bursting of the cover :

a) perpendicular to the plane of curvature.

b) in the plane of curvature, e.g. where the curved tendons run close to and approximately parallel to the surface of a member, the cover should be in accordance with the values given in Table E-1. Where tendon profilers or spacers are provided in the ducts, and these are of a type which will concentrate the radial force, the values given in Table E-1 will need to be increased.

The cover for a given combination of duct internal diameter and radius of curvature shown in Table E-1 may be reduced pro rata with the square root of the tendon force when this is less than the value tabulated, subject to the recommendations of 16.9.2.3.

When detail (b) above is used and the tendon develops radial forces perpendicular to the exposed surface of the concrete, the duct should be restrained by stirrup reinforcement anchored into the members.

E-3 SPACING - In order to prevent crushing of the concrete between ducts minimum spacing should be as follows :-

a) In the plane of curvature : the values given in Table E-2 or the value given in 16.9.3.3, whichever is the greater.

b) Perpendicular to the plane of curvature : in accordance with the recommendations of 16.9.3.3. Where tendon profilers or spacers are provided in the ducts, and these are of a type which will concentrate the radial force, the values given in Table E-2 will need to be increased. If necessary, reinforcement should be provided between ducts.

TABLE E-1: MINIMUM COVER TO DUCTS PERPENDICULAR TO PLANE OF CURVATURE, IN MILLIMETRES

		DUCTS INTERNAL DIAMETER (mm)													
RADIUS OF CURVATURE OF DUCT		40	50	60	70	80	90	100	110	120	130	140	150	160	170
						TENDON FORCE (kN)									
(m)		960	1337	1920	2640	3360	4320	5183	6019	7200	8640	9424	10336	11248	13200
2		155	220	320	445								Radii not normally used		
4		75	100	145	205	265	350	420							
6			75	90	125	165	220	265	310	375	460				
8				75	95	115	150	185	220	270	330	360	395		
10					85	100	120	140	165	205	250	275	300	330	
12					75	90	110	125	145	165	200	215	240	260	315
14						85	100	115	130	150	170	185	200	215	260
16						80	95	110	125	140	160	175	190	205	225
18						75	90	105	115	135	150	165	180	190	215
20							85	100	110	125	145	155	170	180	205
22							80	95	105	120	140	150	160	175	195
24							80	90	100	115	130	145	155	165	185
26							75	85	100	110	125	135	150	160	180
28								85	95	105	120	130	145	155	170
30								80	90	105	120	130	140	150	165
32								80	90	100	115	125	135	145	160
34								75	85	100	110	120	130	140	155
36									85	95	110	115	125	140	150
38									80	90	105	115	125	135	150
40		75	75	75	75	75	75	75	80	90	100	110	120	130	145

Note : The tendon force shown is the maximum normally available for the given size of duct.
(Taken as 80% of the characteristic strength of the tendon).

TABLE E-2: MINIMUM DISTANCE BETWEEN CENTRE LINES OF DUCTS IN PLANE OF CURVATURE, IN MILLIMETRES

		DUCTS INTERNAL DIAMETER (mm)													
RADIUS OF CURVA TURE OF DUCT(m)		40	50	60	70	80	90	100	110	120	130	140	150	160	170
						TENDON FORCE (kN)									
		960	1337	1920	2640	3360	4320	5183	6019	7200	8640	9424	10336	11248	13200
2		350	485	700	960								Radii not normally used		
4		175	245	350	480	610	785	940							
6		120	165	235	320	410	525	630	730	870	1045				
8		90	125	175	240	305	395	470	545	655	785	855	940		
10		80	100	140	195	245	315	375	440	525	630	685	750	815	
12					160	205	265	315	365	435	525	570	625	680	800
14					140	175	225	270	315	375	450	490	535	585	785
16						160	195	235	275	330	395	430	470	510	600
18							180	210	245	290	350	380	420	455	535
20								200	220	265	315	345	375	410	480
22										240	285	310	340	370	435
24											265	285	315	340	400
26											260	280	300	320	370
28															345
30															340
32															
34															
36															
38															
40		80	100	120	140	160	180	200	220	240	260	280	300	320	340

Note 1 : The tendon force shown is the maximum normally available for the given size of duct.
(Taken as 80% of the characteristic strength of the tendon).

Note 2 : Value less than 2x duct internal diameter are not included.

APPENDIX–F
(Clause 18.3)
NON-DESTRUCTIVE TESTING OF CONCRETE

F-1 General

F-1.1 This appendix deals with the non-destructive testing of concrete, reinforced and prestressed concrete test specimens, precast components and structures. Non-destructive testing of concrete is to be done when the various performance characteristic of concrete in a structure are required to be assessed.

F-2 Methods

The methods used for non-destructive testing are generally Schmidt's Rebound Hammer method and ultrasonic pulse velocity method.

F-2.1 Rebound Hammer Method

F-2.1.1 General – The rebound hammer method provides a convenient and rapid indication of the compressive strength of concrete by establishing a suitable correlation between the rebound index and strength of concrete. In general, the rebound number increases as the strength increases but it is also affected by a number of other parameters like age, moisture content, texture, form material, aggregate type, type of cement and extent of carbonation on concrete surface. The probable accuracy of prediction of concrete strength in a structure by this method is usually within 25%.

F.2.1.2 Method of Testing- For taking measurement, the appropriate type of Schmidt's Hammer suitable for the particular concrete structure should be selected. The hammer should be held at right angles to the surface of the structure. The test can be conducted horizontally on vertical surfaces or vertically upwards or downwards on horizontal surfaces. It is necessary that test hammer is frequently calibrated and checked against the test anvil to ensure reliable results.

F.2.2 Ultrasonic Pulse Velocity Test

F.2.2.1 General – This method is based on the principal that the velocity of an ultrasonic pulse through any material depends upon its density, modulus of elasticity and Poisson ratio. In this method, an ultrasonic pulse of longitudinal vibrations is produced by an electroacoustical transducer which is held in contact with one surface of the concrete member under test. After transversing a known length in the concrete, the vibration pulse is converted in to an electrical signal by a second electroacoustical transducer held in contact with the other surface of concrete member and an electronic timing circuit enables the transit time of the pulse to be measured from which pulse velocity can be calculated.

F-2.2.2 Application of Ultrasonic Pulse Velocity Method – The method can be used to determine the homogeneity of the concrete, the presence of cracks. Voids and other imperfections, changes in the structure of concrete which occur with time, the quality of the concrete in relation to requirements, relative variation in quality, or to determine the elastic modulus value of the concrete. The higher velocities are obtained when the quality of concrete, in terms of density, homogeneity and uniformity is good. If there is a crack, void of flaw inside the concrete which comes in the way of transmission of the pulse, the pulse strength is attenuated and it passes around the discontinuity, there by making the path length longer. Consequently the lower velocities are obtained and strength of the signal also becomes weaker. The guidelines for assessing condition of concrete based on pulse velocity are given in Table F-1.

TABLE F-1: VELOCITY CRITERION FOR CONCRETE QUALITY GRADING

S.No.	Pulse Velocity in km/sec	Condition of concrete
1.	Below 3.0	Doubtful
2.	3.0 to 3.5	Medium
3.	3.5 to 4.5	Good
4.	Above 4.5	Excellent

APPENDIX–G
(Clause 5.4.2.1)
TEST PROCEDURE FOR MEASURING PERMEABILITY OF CONCRETE

G-1 Test Specimen:

Test specimen of 200 mm dia and 120 mm thick shall be used. After 24 hours of casting of specimen, central circular area of 100mm diameter shall be roughened with a wire brush on the side on which the water pressure is to be applied. The unroughened part of the side of the test specimen which is subjected to water pressure is to be sealed with two coats of cement water paste (W/C = 0.4).

G-2 Procedure:

(a) After 28 days curing, test specimen is fitted in to a test apparatus where water pressure acts on the required face and remaining faces can be observed (Fig.G-1).

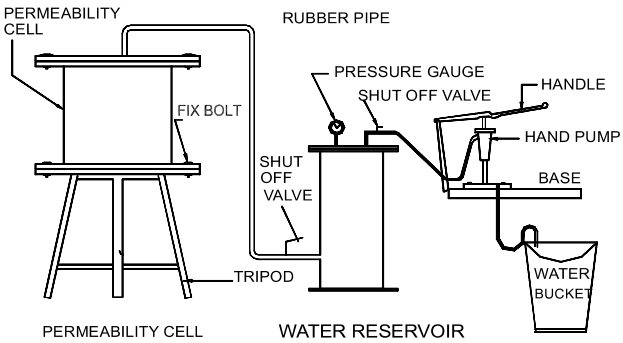

(b) At first, a pressure of 1 bar is applied for 48 hours, then 3 bar for 24 hours and 7 bar for 24 hours.

(c) After the test, the specimen is split in the middle by compression applied on two round steel bars lying on opposite sides, above and below. The side after test specimen exposed to the water pressure should face downwards.

G-3 The greatest water penetration depth, is taken as the average value of the greatest penetration depths on three test specimen.

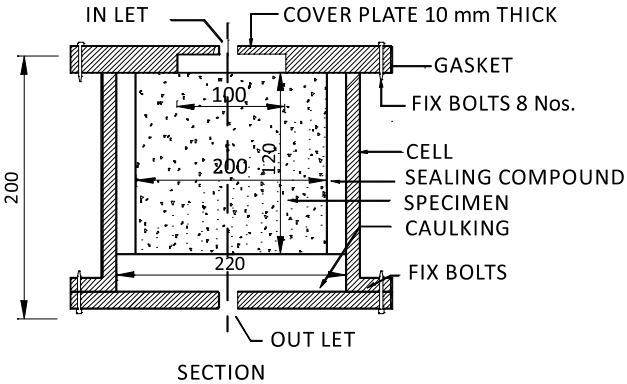

FIG. G-1 TYPICAL PREMEABILITY TEST SET-UP.

APPENDIX-H
(Clause 13.4(c)}
FATIGUE ASSESSMENT OF DETAILS OF WELDED REINFORCEMENT BARS

H.1. General: This appendix gives the method of assessment of fatigue of concrete bridges having welded reinforcement. Assessment has been done without damage calculation.

For more accurate fatigue assessment specialist literature may be referred to.

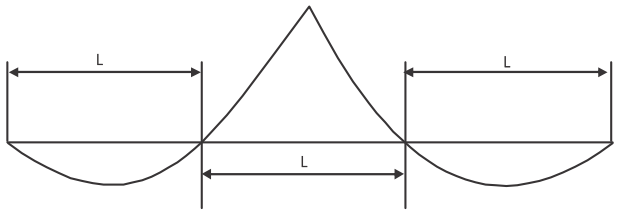

Influence Line Diagram of Three Span Continuous Beam

H-2. Procedure: The following procedure should be used.

a) Determine the maximum and minimum values of principal stress p_{max} and p_{min} occurring at the detail being assessed by application of live loads on the base length of loop of point load influence line for bending moment. The typical influence line of three span continuous bridge is illustrated below.

L = Base length of loop containing largest ordinate (measured in direction of travel).

Note: For simply supported bridges the base length of loop shall be equal to effective span of bridges for bar welded in longitudinal direction.

b)Determine the maximum range of stress $\sigma_{Rmax.}$ equal to the numerical value of $p_{max} - p_{min.}$

c) Obtain the limiting stress range σ_T from following equations.

$$\sigma_T = k_1 \times k_2 \times k_3 \sigma_0$$

where k_1 = 10 if the design life is 120 years, otherwise it is taken as lesser of the following:

$$(a) \quad \left(\frac{120}{design \quad life \ in \ years}\right)^{1/3}$$

or

$$(b) \quad \left(\frac{120}{design \quad life \ in \ years}\right)^{1/5}$$

Values of k_2 & k_3 are taken from Table H-1 and H-2

TABLE H-1(Value of k_2)

Length(m)	Value of k_2
<3.4	1.00
3.4 to 4.0	1.09
4.0 to 4.6	1.23
4.6 to 7.0	1.37
7.0 to 10.0	1.53
10.0 to 14.0	1.71
14.0 to 28.0	1.92
>28.0	2.19

TABLE H-2 (value of k_3)

Annual GMT on one Track	Value of k_3
<5	1.60
5 to 7	1.42
7 to 12	1.27
12 to 18	1.13
18 to 27	1.00
>27	0.89

σ_0 may be taken as 53 N/mm^2 for welded reinforcement bars. The detail may be considered to have a fatigue life in excess of the specified design life where $\sigma_{Rmax.}$ does not exceed $\sigma_{T.}$ In case $\sigma_{Rmax.}$ exceeds the limiting stress range the detail may be strengthened to reduce the value of σ_{Rmax}

LIST OF BIS SPECIFICATIONS REFERRED IN THIS CODE

Code Part		Description	List I	List II	Latest Year of revision
02		Rules for rounding off numerical values (revised 1984)	1960	-	1990*
269		Specn. for 33 grade ordinary Portland cement (4th rev.)	1989	-	-
280		Mild steel wire for General Engineering Purpose	1978	-	1992*
383		Specn. for coarse and fine aggregates from natural sources for concrete (2nd rev.)	1970	-	1990*
432	Pt.I	Specn. for mild steel & medium tensile steel bars and hard drawn steel wire for concrete reinforcement: mild steel and medium tensile steel bars (3rd rev.)	1982	-	1989*
432	Pt.II	Specn. for mild steel & hard drawn steel wire	1982	-	1989*
455		Specn. for Portland slag cement (4th rev.)	1989	-	-
456		Code of practice for plain and reinforced concrete.	1987	-	1991*
516		Methods of tests for strength of concrete	1959	-	1991*
875	Pt.I	Code of practice for design loads (other than earthquake) for buildings and structures	1987	-	1992
875	Pt.I	Dead loads-unit weight of building material and stored materials (second revision) incorporating IS:1911-1967			
875	Pt.II	Code of practice for imposed Loads (2nd revision)	1987	-	1992
875	Pt.III	Code of practice for wind loads (2nd revision)	1987	-	1992*
875	Pt.IV	Code of practice for snow loads (2nd revision)	1987	-	1992
875	Pt.V	Code of practice for special loads and load combinations (2nd revision)	1987	-	1992
1199		Methods of sampling and analysis of concrete	1959	-	1991*
1343		Code of practice for prestressed concrete (1st rev.)	1980	-	1990*
1344		Specn. for calcined clay Pozzolana (2nd rev.)	1981	-	1990*
1489		Specn. for Portland Pozzolana cement (3rd re.)	1991	-	1991
1566		Specn. for hard drawn steel wire fabrics for concrete reinforcement (2nd rev.)	1982	-	1989*
1642		Code of practice for fire safety of building (general): Materials and details of construction (1st. rev.)	1989	-	1989
1785	Pt.I	Specn. for plain hard drawn steel wire for prestressed concrete : cold drawn stress relieved wire (2nd rev.)	1983	-	1989*
	Pt.II	Specn. for plain hard drawn steel wire for prestressed concrete: Asdrawn wire (1st rev.)	1983	-	1989*
1786		Specn. for cold worked steel high strength deformed bars for concrete reinforcement (3rd rev.)	1985	-	1990*
1791		Specn. for batch type concrete mixers (2nd rev.)	1985	-	1990*
1893		Criteria for earthwork resistant design of structure (4th rev)	1984	-	1991*
1904		Code of practice for structural safety of buildings : shallow foundations (3rd rev.)	1986	-	1986
1905		Code of practice for structural safety of buildings: Masonary walls (3rd rev.)	-		1987
1911		Schedule of unit weights of buildings materials (1st rev.)	1967	-	-
2062		Steel for general structural purposes fourth revision (supercedes IS: 226:1975)	1984	-	1992*
2090		Specn. for high tensile steel bars used in prestressed concrete (1st rev.)	1983	-	1989

LIST OF BIS SPECIFICATIONS REFERRED IN THIS CODE

Code Part		Description	List I	List II	Latest Year of revision
2386	Pt.I to Pt. VIII	Method of test for aggregates for concrete: specific, gravity, density, voids, absorption and bulking.	1963	-	1990*
2502		Code of practice for bending and fixing bars for concrete reinforcement	1963		1990*
2505		Specn. for concrete vibrators, immersion type (2nd revision)	1968	-	1990*
2506		Specn. for screen board concrete vibrators (1st Revision)	1985		1990*
2514		Specn. for concrete vibrators (1st rev.)	1985	-	1990*
2751		Code of practice for welding of mild steel bars used for reinforced concrete construction (1st rev.)	1979	-	1987*
3025		Methods of sampling and test (physical and chemical) for water used in industry			
	Pt.IV	Colour (1st re.) superceding IS:2488	1983	-	1989*
	Pt.V	Odour (1st rev)	1983	-	1989*
	Pt.VI	Odour threshold	1984	-	
	Pt.VII	Taste threshold	1984	-	1989
	Pt.VIII	Taste rating	1984	-	1989*
	Pt.IX	Temperature	1984	-	1989*
	Pt.X	Turbidity	1984		
	Pt.XI	Ph. Value	1983	-	1989*
	Pt.XII	Density	1983	-	1989*
	Pt.XIII	Saturation index (with respect to calcium carbonate)	1983	-	1989*
	Pt.XIV	Specific conductance (wheatstone bridge conductance cell)	1984	-	1989*
	Pt.XV	Total residue	1984	-	1989*
	Pt.XVI	Filterable residue (total dissolved solids)	1984	-	1989*
	Pt.XVII	Non filterable residue (total suspended solids)	1984	-	1989*
	Pt.XVIII	Volatile and fixed residue (total filterable & non filterable	1984	-	1989*
	Pt.XIX	Settleable matter	1984	-	1989*
	Pt.XX	Dispersion character (flow patterns)	1984	-	1989*
	Pt.XXI	Total hardness	1983	-	1989*
3812	Pt.I	Specn. for fly ash: for use as pozzolana	1981	-	1992*
	Pt.II	Specn. for fly ash: for use as admixture for concrete	1981	-	1992*
	Pt.III	For use as fine aggregate for mortar and concrete	1981	-	1992*
3951	Pt.I	Specn. for structural hollow clay tiles for floors and roofs filter type (1st rev.)	1975	-	1991*
	Pt.II	Specn. for structural type (1st rev.)	1975	-	1991*
4031		Methods for physical tests for hydraulic cement(1st rev.)	1988	-	1988
4032		Methods of chemical tests for cements	1988	-	1988
4082		Recommendations on stacking and storage of construction materials at site (1st rev.) construction of buildings (1st rev.)	1977	-	1990*
4656		Specn. for form vibrators for concrete	1968	-	1991*
4845		Definition and terminology relating to hydraulic	1968	-	1992*
4925		Specn. for concrete batching and mixing plant	1968	-	1991*

LIST OF BIS SPECIFICATIONS REFERRED IN THIS CODE

Code Part		Description	List I	List II	Latest Year of revision
5816		Method of test for splitting tensile strength of concrete cylinders	1970	-	1992*
6003		Speen for indented wire for prestressed concrete	1983	-	1989*
6006		Speen for uncoated stress relieved strand for prestressed concrete (1st rev.)	1983	-	1989*
6061	Pt.1	Code of practice for construction of floors and roofs with joints and hollow filler blocks:with hollow concrete filler blocks.	1971	-	1987*
6061	Pt.II	Specn. for construction of floors and roofs with joints and hollow filler blocks :with hollow clay filler blocks.(1st rev.)	1981	-	1990*
6452		Specn. for high alumina cement for structural use.	1989	-	-
6461		Glossary of terms relating to cement concrete.	-	-	-
	Pt.I	Concrete aggregates.	1972	-	1992*
	Pt.II	Materials (other than cement and aggregate).	1972	-	1992*
	Pt.III	Concrete reinforcement.	1972	-	1992*
	Pt.IV	Types of concrete.	1972	-	1992*
	Pt.V	Formwork for concrete.	1972	-	1992*
	Pt.VI	Equipment tools and plant.	1972	-	1992*
	Pt.VII	Mixing, laying, compaction, curing & other construction aspects.	1973	-	1992*
	Pt.VIII	Properties of concrete.	1973	-	1992*
	Pt.IX	Structural aspects.	1972	-	1992*
	Pt.X	Tests and testing apparatus.	1973	-	1992*
	Pt.XI	Prestressed concrete.	1973	-	1992*
	Pt.XII	Miscellaneous.	-	1973	1992*
6909		Specn. for supersulphated cement.	1990	-	-
7861	Pt.I	Specn. for extreme weather concreting: Recommended practice for hot weather concreting.	1975	-	1990*
	Pt.II	Specn. for recommended practice for cold weather concreting.(under preparation).	1981	-	1992*
8041		Specn. for rapid hardening Portland cement (2nd rev.)	1990	-	-
8043		Specn. for hydrophobic Portland cement (2nd rev.)	1991	-	-
8112		Specn. for high strength ordinary Portland cement (1st rev.)	1989	-	-
9013		Method of making, curing and determining compressive strength of accelerated cured concrete test specimens.	1978	-	1992*
9103		For admixture for concrete	1979		1990 *
9417		Recommendations for welding cold worked steel bars for reinforced concrete construction (1st rev.)	1989		1989
10262		Recommendations guidelines for concrete mix design	1982		1989*
12269		53 grade ordinary Portland cement	1987		1992
12330		Specification for sulphatic resisting Portland cement	1988	-	-
14268		Uncoated stress relieved low relaxation seven – ply strand for prestressed concrete specification	-	-	1995
SP.16		Design aids for reinforced concrete structure * (reaffirmed)	-	-	1978

Note:

1. It is recommended that the officials involved in the construction of concrete bridges are in possession of the codes/ specifications referred in this code.
2. Although a latter version of any specification is issued by Bureau of Indian Standards by superceding the previously issued specifications, it does not necessarily mean that the latter version has been adopted on Indian Railways. User should consult the list of IS specifications adopted on Indian Railways, issued by RDSO from time to time.